ZONE	REV	REVISIONS DESCRIPTION	DATE	APVD
7F 6C 6D 5C	A	ADDED PIC OF TERM BD (ITEM 33 REF) TO SECT N-N ADDED PIC OF T/B 11.15 WAS 11.150±.020 19.90 WAS 19.900±.020	5-12-83	FORD McCORD NORB P.
6C 7A 8B	B	REVISED PICTURE. ADDED ITEM 22 3 PLACES. ADDED ITEM 40 4 PLACES.	84-06-16	CORCORAN H FORD
	C	LETTER CHANGE ONLY		

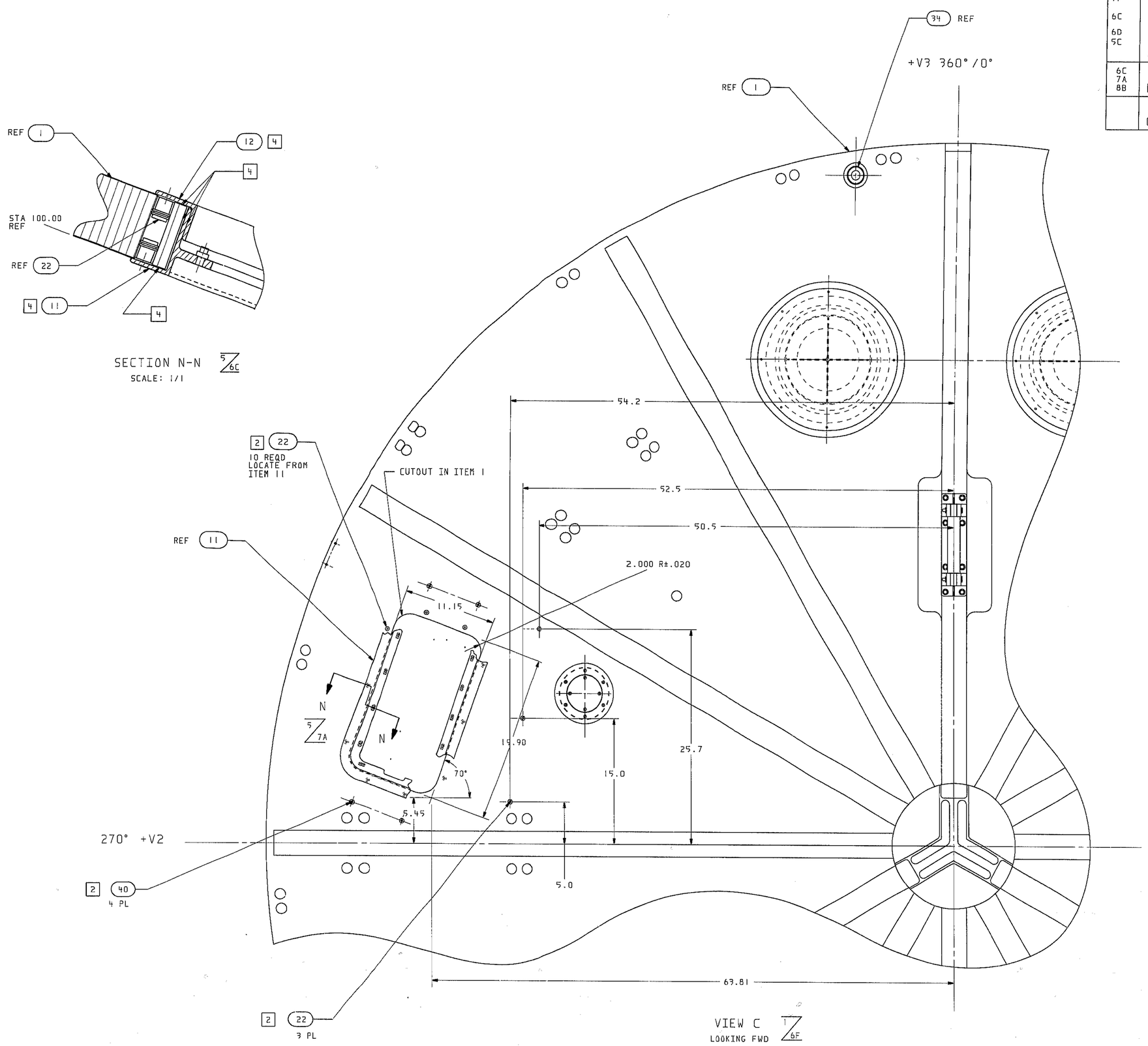

SIZE	FSCM NO.	DRAWING NO.	REV
E	06887	4174146	C
SCALE 1/4		SHEET 5	