REVISIONS				
ZONE	REV	DESCRIPTION	DATE	APVD

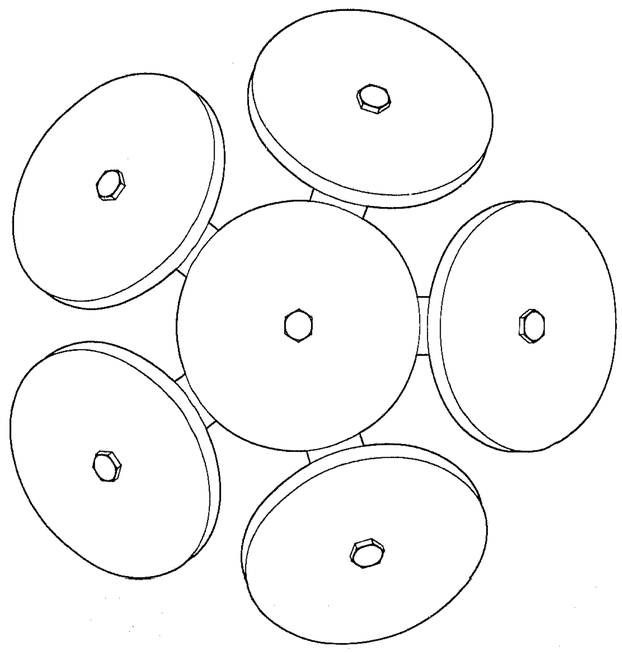

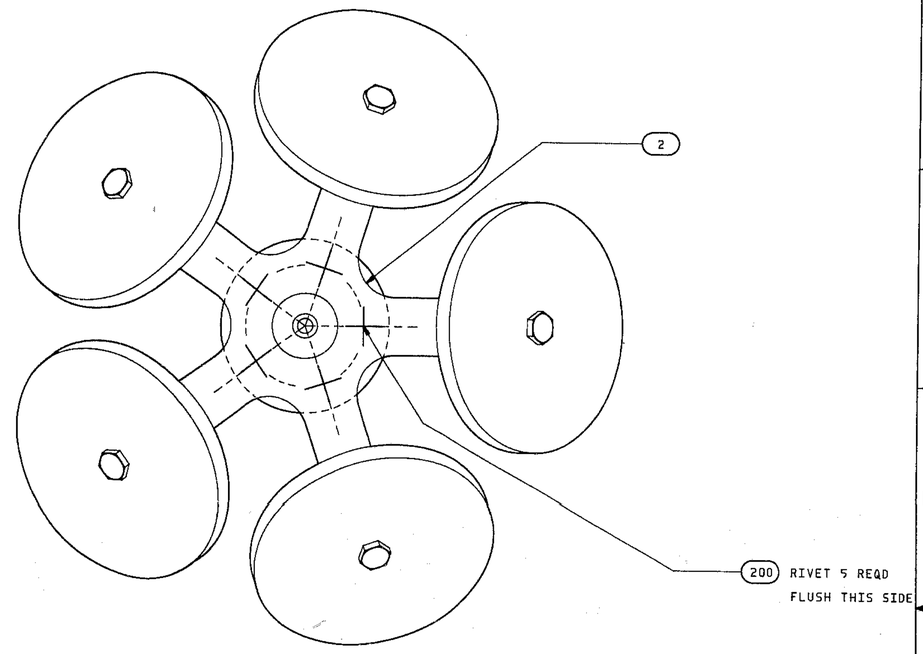

SECTION A-A

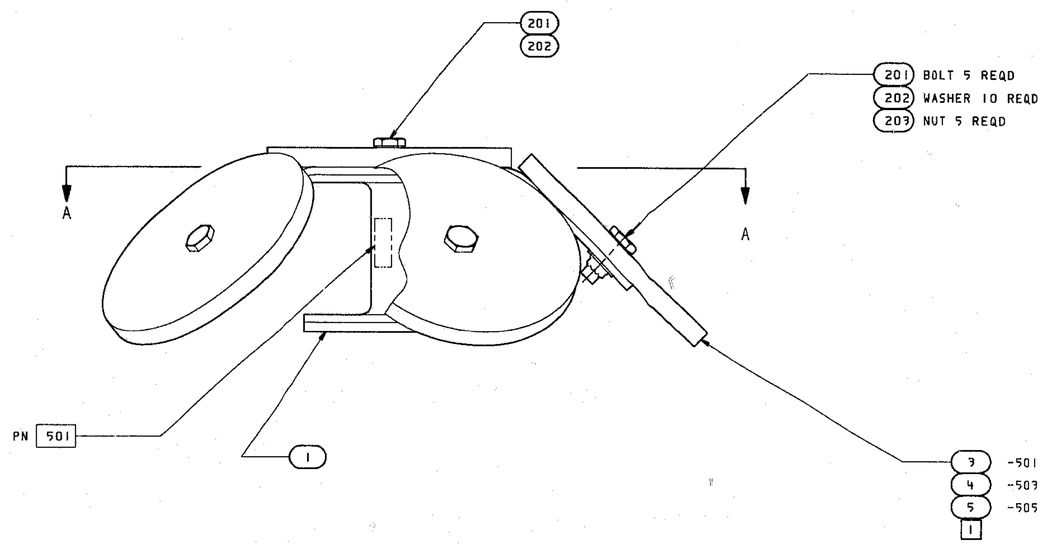

SEE PL4176786 FOR PARTS LIST AND NOTES

4171684	UNLESS OTHERWISE SPECIFIED DIM. ARE IN INCHES. TOLERANCES ON: FRACTIONS = ± 1/16 DECIMALS: .X = ± .1 .XX = ± .03 .XXX = ± .010 ANGLES = ± 2 DEG.	DATE 84 JUN 26	LOCKHEED MISSILES & SPACE COMPANY, INC. SUNNYVALE, CALIFORNIA
		DWN Z. H. CHAPMAN	
		APVD	
		APVD	REFLECTOR ASSEMBLY
		ENGRG H. FORD	
		CHKR J.BIKULCIUS	
		APVD	SIZE E FSCM NO. 06887 DRAWING NO. 4176786 REV
NEXT ASSY / USED ON	CONTR NAS8-32697	APVD	SCALE 1.5/1 SH 1 OF 1
APPLICATION	CCA/CEI		

EJRT FLMVD01E00201 62-32