4177006,01,NC,01
9051D

STDLIB

REVISIONS				
ZONE	REV	DESCRIPTION	DATE	APVD

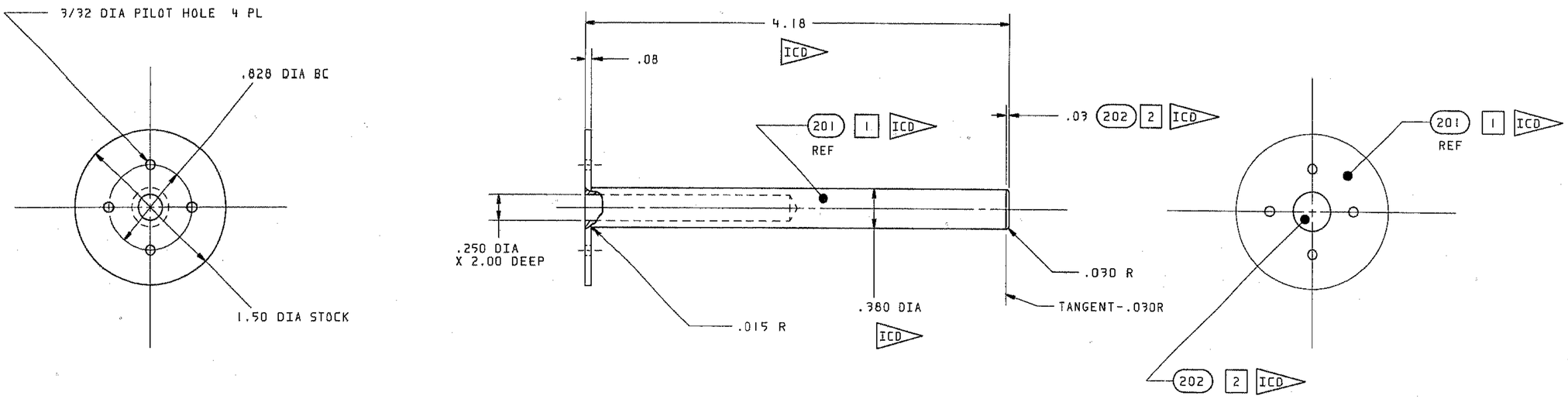

THIS DRAWING CONTAINS INFORMATION FLAGGED ICD WHICH IS CONTROLLED BY AN INTERFACE CONTROL DOCUMENT(ICD). NO CHANGES SHALL BE MADE TO INFORMATION CONTROLLED BY AN ICD PRIOR TO INTERFACE CONTROL MANAGEMENT AUTHORIZATION. SEE ST-ICD 10 (C M08)

SEE PL 4177006 FOR PARTS LIST AND NOTES

4177004	UNLESS OTHERWISE SPECIFIED DIM. ARE IN INCHES. TOLERANCES ON: FRACTIONS = ± 1/16 DECIMALS: .X = ± .1 .XX = ± .03 .XXX = ± .010 ANGLES = ± 2 DEG.	DATE 10-02-84	LOCKHEED MISSILES & SPACE COMPANY, INC. SUNNYVALE, CALIFORNIA
		DWN D.BUTTERWORTH	SPIKE- TARGET
		APVD	
		APVD J.R.RITZ	
		ENGRG R.ALEXANDER	
		CHKR J.BIKULCIUS	
		APVD	SIZE D FSCM NO. 06887 DRAWING NO. 4177006 REV
NEXT ASSY / USED ON	CONTR NAS8-32697	APVD	
APPLICATION	CCA/CEI		SCALE N/A SH 1 OF 1

EJRT FLMVD05A00401