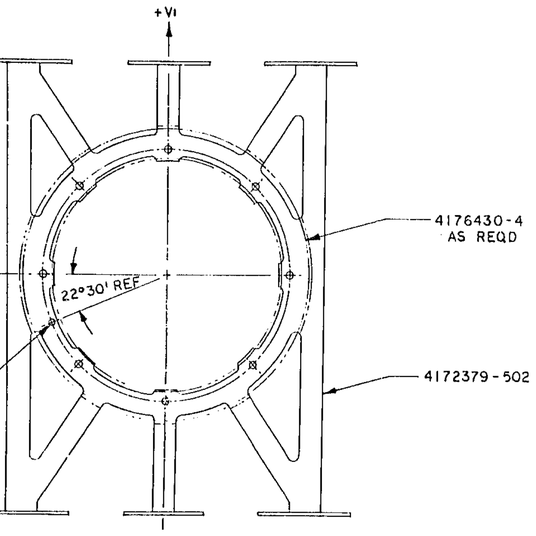

VIEW J 1/10 E
1/2 SCALE
SAME AS VIEW F
EXCEPT INDEX HOLE

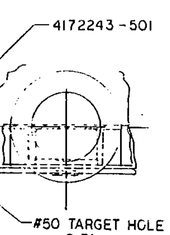

VIEW L 1/16 C
1/2 SCALE

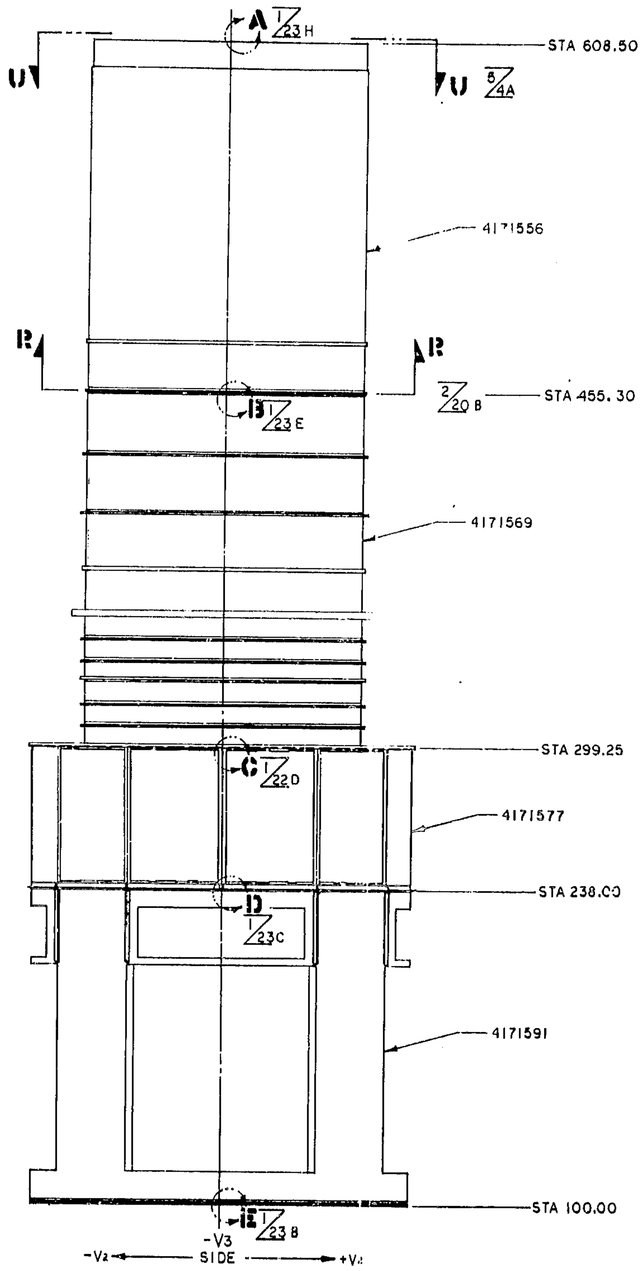

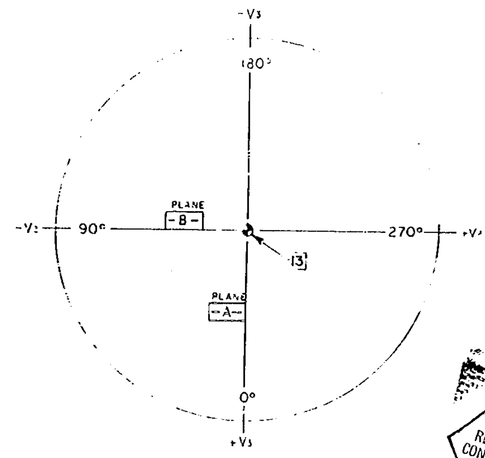

LOOKING FWD

THIS DWG CONTAINS INFORMATION FLAGGED ICD WHICH IS CONTROLLED BY AN INTERFACE CONTROL DOCUMENT (ICD). NO CHANGES SHALL BE MADE TO INFORMATION CONTROLLED BY AN ICD PRIOR TO INTERFACE CONTROL MANAGEMENT AUTHORIZATION.

QTY REQD	CODE IDENT	PART OR IDENTIFYING NO	NOMENCLATURE OR DESCRIPTION	MATERIAL DESCRIPTION OR NOTE	MATERIAL SPECIFICATION	ZONE	ITEM NO
16		AN315C5R	NUT			1-24C	206
16		AN5C10	BOLT			1-24C	205
248	88044	AN960C516L	WASHER, FLAT				204
134		AN5C13	BOLT				203
158	88044	AN315C4R	NUT				202
310	88044	AN960PD416	WASHER				201
158	88044	AN4C10	BOLT				200

PARTS LIST

INTERPRET DWG PER	
4171556	
4171569	
4171577	
4171591	
NEXT ASSY	USED ON
APPLICATION	

UNLESS OTHERWISE SPECIFIED DIM ARE IN INCHES, TOLERANCES ON: FRACTIONS = ± 1/16 DECIMALS: .X = ± .1 .XX = ± .03 .XXX = ± .010 ANGLES = ± 2 DEG

CONTR NAS-8-32697

CCA/CI/PD

DATE 9-12-78
DWN Z. Chapman
APVD
APVD
ENGRG
CHKR
APVD
APVD

LOCKHEED MISSILES & SPACE COMPANY, INC.
SUNNYVALE, CALIFORNIA

BASIC CONFIGURATION AND ALIGNMENT DRAWING
SSM ASSEMBLY - SPACE TELESCOPE

SIZE J | CODE IDENT 06887 | DRAWING NO 4171580 | REV C
SCALE 1/2 & NOTED | SHEET 1 OF 5

SEE 2/24H FOR NOTES
LAST LETTER USED BU

EJRT: FLMVL 200 010.01X 62-32

THIS PHOTOGRAPHIC IMAGE WAS PRODUCED IN ACCORDANCE WITH LMSC ENGINEERING DRAWING SERVICES STANDARD OPERATING PROCEDURES.

ZONE	LTR	REVISIONS DESCRIPTION	DATE	APVD
24D 14E	A	REMOVED BOLT QTY SEE SHT 2 DELETED HGA MOUNT HOLE CALLOUT	82-3-5	
	B	REVISED AND REDRAWN ADDED SHTS 3 THRU 8		
	B01	LEO INC REVISED SHTS 2,3,4,5,6,7,8. ADDED FLAG & SPEC NOS. REMOVED SECTION W-W		
	C	REVISED VIEWS F, M-M & G		

16 15 14 13 12 11 10 9 8

.580 1.160 4172201-1 10.060
2.250
1.125
1.315
2.630 6.810
.800
1.600 1.100
1.510
1.062 2.124 4.320 2.160
37.685
125.40

.226 DIA .220 2 HOLES 2 PL
4172201-2
.286 DIA .280 10 HOLES 2 PL
⌖ A .010
STA 492.985
+V1
+V3
// B .010
PEELABLE SHIM 4176430-5
4172203-2
4172203-1
61.322 [17]
61.442 TOP OF SHIM
14.050 14.050
TO -B-

VIEW N-N 1/2 SCALE

4172381-1 2 PL REF
-A- REF
℄ HGA STA 333.000 MAST HINGE
FOR HGA MOUNT HOLE PATTERN SEE 4171569
4172383-1 REF
+V3
PEELABLE SHIM SEE 6/14A
// 8 .010
66.820 [17]
TO -8-

VIEW P-P 1/2 SCALE

VIEW G STA 300.00 THRU STA 505.00
SCALE 1/2
HGA INSTALLATION SAME ON -V3

+V2 ← +V3 SIDE → -V2

VIEW J 1/2 SCALE
SAME AS VIEW F EXCEPT INDEX HOLE

STA 320.00
22°30' REF
.250 DIA INDEX HOLE REF
ICD-05 REF FIG 3.3.1-1

4172243-501
4172254-1
4172124-1
#50 TARGET HOLE 2 PL

VIEW K 1/2 SCALE

+V3 ← -V2 SIDE → -V3

THIS DRAWING AND ALL INFORMATION HEREON IS THE PROPRIETARY PROPERTY OF SEAGATE TECHNOLOGY AND IS NOT TO BE REPRODUCED OR TRANSMITTED IN ANY FORM OR BY ANY MEANS, ELECTRONIC OR MECHANICAL, WITHOUT THE PRIOR WRITTEN PERMISSION OF SEAGATE TECHNOLOGY. ALL RIGHTS RESERVED UNDER THE COPYRIGHT LAWS.

DRAWING NO	REV	SH
4171580	C	1

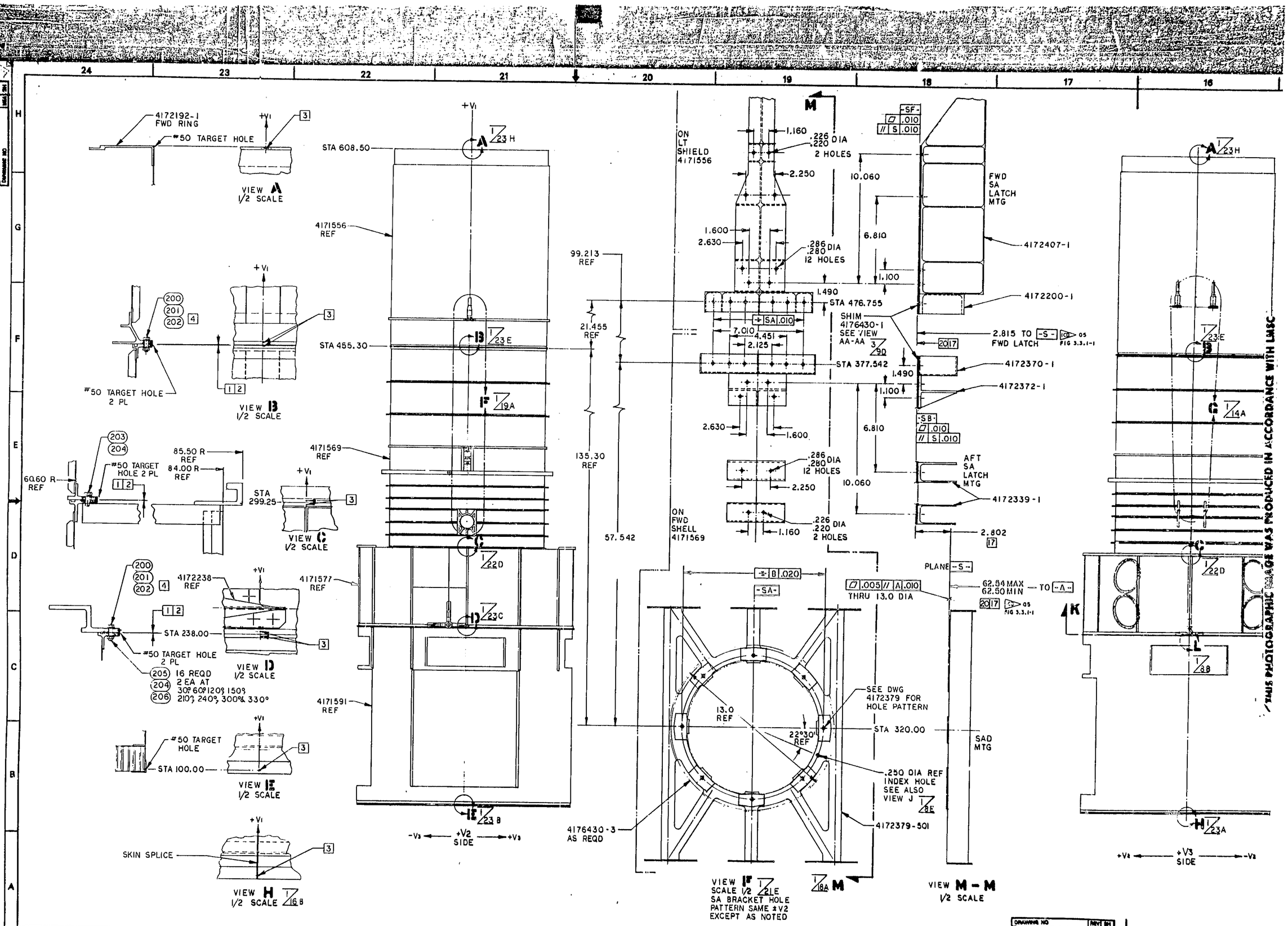

DRAWING NO 4171580 REV C SH 1

ZONE	LTR	REVISIONS DESCRIPTION	DATE	APVD
M 9F	A	DELETED I/F HOLE CALL OUTS. ADDED NOTE 12 ADDED NOTE 19		
	C	ADDED VIEWS BS & BT. ADDED FLAG & SPEC NOS. REMOVED VIEW W-W ADDED VIEW BU-BU ADDED NOTES		

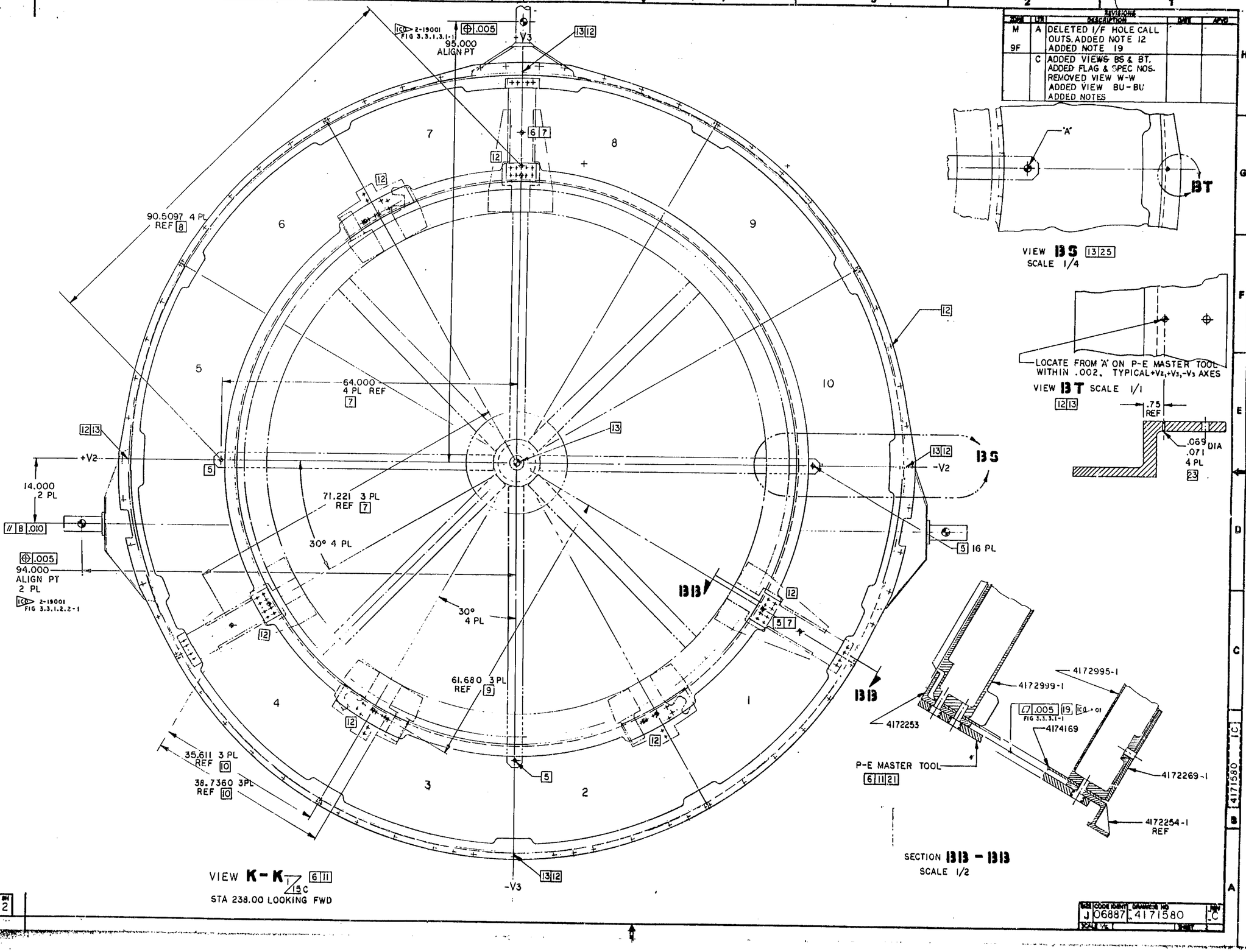

VIEW **K-K** 6 11
15 C
STA 238.00 LOOKING FWD

VIEW **BS** 13 25
SCALE 1/4

VIEW **BT** SCALE 1/1
12 13

SECTION **BB - BB**
SCALE 1/2

CAGE IDENT	DRAWING NO	REV
J06887	4171580	C

SCALE 1/2 SHEET 2

4171580 C

THIS PHOTOGRAPHIC IMAGE WAS PRODUCED IN ACCORDANCE WITH LMSC ENGINEERING DRAWING SERVICES STANDARD OPERATING PROCEDURES.

16 15 14 13 12 11 10 9 8

WD

CTRBR .76 DIA
03R X .07 DP
D FACE OF
72396 RING

15-503
PIN 2 PL
54-4 DOME NUT
0-416L

SHIM
4176430-7

4174110-501

14.000±.30

±V2

// A .03

SHIM
4176430-7

89.50±.03
IC A-14009
FIG E3.1.2.1.1-1

4176442-007

4176442-005

4171556

4176442-001

4176442-003

FWD

±TA
535.00 IC
±.30

90.50
REF

12 13

+V2

14.000
2 PL

// B .010

⌖ .005
94.000
ALIGN PT
2 PL
IC 2-18001
FIG 5.3.1.2.2-1

THIS PHOTOGRAPHIC IMAGE WAS PRODUCED IN ACCORDANCE WITH LMSC

3/4G
SCUFF PLATE

DRAWING NO 4171580 REV C SH 2

NOTES:

1. .025 MAX GAP - MEASURED AFTER INSTALLING BOLTS, NUTS AND WASHERS. APPLY A TORQUE OF 15 IN-LB IN A CRISS-CROSS PATTERN ±5 IN-LB.
2. ALL GAP MEASUREMENTS SHALL BE TAKEN AFTER VEHICLE HAS BEEN ALIGNED VERTICALLY.
3. RECORD DIRECTION AND DISPLACEMENT OF TARGET HOLES ABOUT AXIS. WHEN FACING VEHICLE, DISPLACEMENT LEFT IS +, RIGHT IS -.
4. ADD WASHERS AS REQD TO COMPENSATE FOR VARYING RING THICKNESS.
5. .250 DIA TARGET HOLE IN P-E MASTER DRILL TOOL P-E NO. 679-0780.
6. REST P-E GAUGE BARS AND P-E MASTER TOOL ON SSM EQUIPMENT SECTION. MASTER TOOL, GAUGE BARS AND EQUIPMENT SECTION SHALL BE AT 69 ± 2°F FOR A MINIMUM OF 16 HOURS BEFORE PERFORMING VERIFICATION AND POSITION CHECKS AND SHALL BE MONITORED TO MAINTAIN THIS TEMP DURING DRILLING AND REAMING OPERATIONS.
7. CHECK P-E MASTER TOOL WITH P-E 679-7340-102 GAUGE BAR NO. 1. VERIFY 64.000 AND 71.221 DIMS.
8. CHECK P-E MASTER TOOL WITH P-E 679-7340-103 GAUGE BAR NO. 2. VERIFY 90.5097 DIM.
9. CHECK P-E MASTER TOOL WITH P-E 679-7340-101 GAUGE BAR NO. 3. VERIFY 61.680 DIM.
10. CHECK P-E MASTER TOOL WITH P-E 679-7340-104 GAUGE BAR NO. 4. VERIFY 38.7360 AND 35.611 DIMS.
11. LOCATE THE V2 AND V3 AXES OF THE P-E MASTER TOOL (.250 DIA HOLES PER NOTE 5) TO THE NO. 50 (.070 DIA) AXIS TARGET HOLES ON EQ SECTION (SEE VIEW D SHT 1/24C) WITHIN ±.005.
12. FOR HOLE PATTERN AND LOCATION SEE DWG 4172237.
13. THE OTA/SSM V1 AXIS IS DEFINED AS THE INTERSECTION OF LINES EXTENDING THRU THE NO. 50 DIA HOLES INSTALLED ON STA 238.00. SEE VIEW 8S SHT 2/2F.
14. V1 AXIS AT STA 299.25 SHALL BE WITHIN .010 OF V1 AXIS AT STA 238.00.
15. V1 AXIS AT STA 455.30 SHALL BE WITHIN .030 OF V1 AXIS AT STA 238.00.
16. V1 AXIS AT STA 608.50 SHALL BE WITHIN .070 OF V1 AXIS AT STA 238.00.
17. VERIFY DIMENSION IN STACK AND RECORD ACTUAL DIMENSION.
18. POSITION WITH FWD SHELL AND LIGHT SHIELD STACKED AND ALIGNED.
19. PRIOR TO INSTALLATION OF MASTER TOOL, VERIFY THAT THE 3 SHEAR FITTING INTERFACES ARE INDIVIDUALLY FLAT WITHIN .005 IN. AND ARE COPLANER WITHIN .015 IN. THE AXIAL FITTING INTERFACE IS LOCATED ON 2 RINGS (4172253 INBOARD AND 4172254 OUTBOARD) AND 3 PL AS SHOWN. EACH AXIAL FITTING INTERFACE SHALL BE FLAT WITHIN .005 AND THE INDIVIDUAL FITTING INTERFACES SHALL BE COPLANER WITHIN .015 IN.
20. DO NOT DISTURB BRACKET ALIGNMENT WHEN INSTALLING LATCH MECHANISM ATTACH BOLTS. ADJUST SHIMS AS REQD TO MAINTAIN BRACKET ALIGNMENT.
21. HANDLE P-E MASTER TOOL PER INSTRUCTIONS IN DOCUMENT P-E 679-1098 REV. A.
22. THE 3 MTG PADS SHALL BE FLAT AND COPLANER WITHIN .010.
23. P-E OTA TRANSFER TARGET HOLES. SEE DWG 4172237. REMOVE P-E MASTER TOOL AFTER TRANSFERRING "A" HOLE (4 HOLES) LOCATION TO 4172254 RING AND DRILLING NO. 50 TARGET HOLES.
24. AFTER FINAL FIXTURE POSITION SECURE BUSHINGS WITH EPOXY LAC 30-4172 OR EQUIVALENT.
25. ALIGN CUBES TO OTA TARGET HOLES IN 4172254 RING AT STA 238.00. SEE VIEW 8S 2/2F.
26. (DWG) DENOTES DETAIL MODEL SPEC.
27. DATUM LIST/LOCATION:

A	1/2D	+V3-V3 AXIS
B	1/2D	+V2-V2 AXIS
BP	8/16C	BERTHING PIN ℄
FSS	8/16A	FLIGHT SUPPORT SYSTEM CONNECTOR
P	8/14D	BERTHING PIN DIA
RI	7/3G	REACTION WHEEL MT DIA
S	1 18D	SAD MT PLANE
SA	1 19D	SAD MT ℄
SB	1 18E	SA AFT LATCH MT
SF	1 18H	SA FWD LATCH MT
T	5 148	TOP OF LS (STA 608.50 REF)

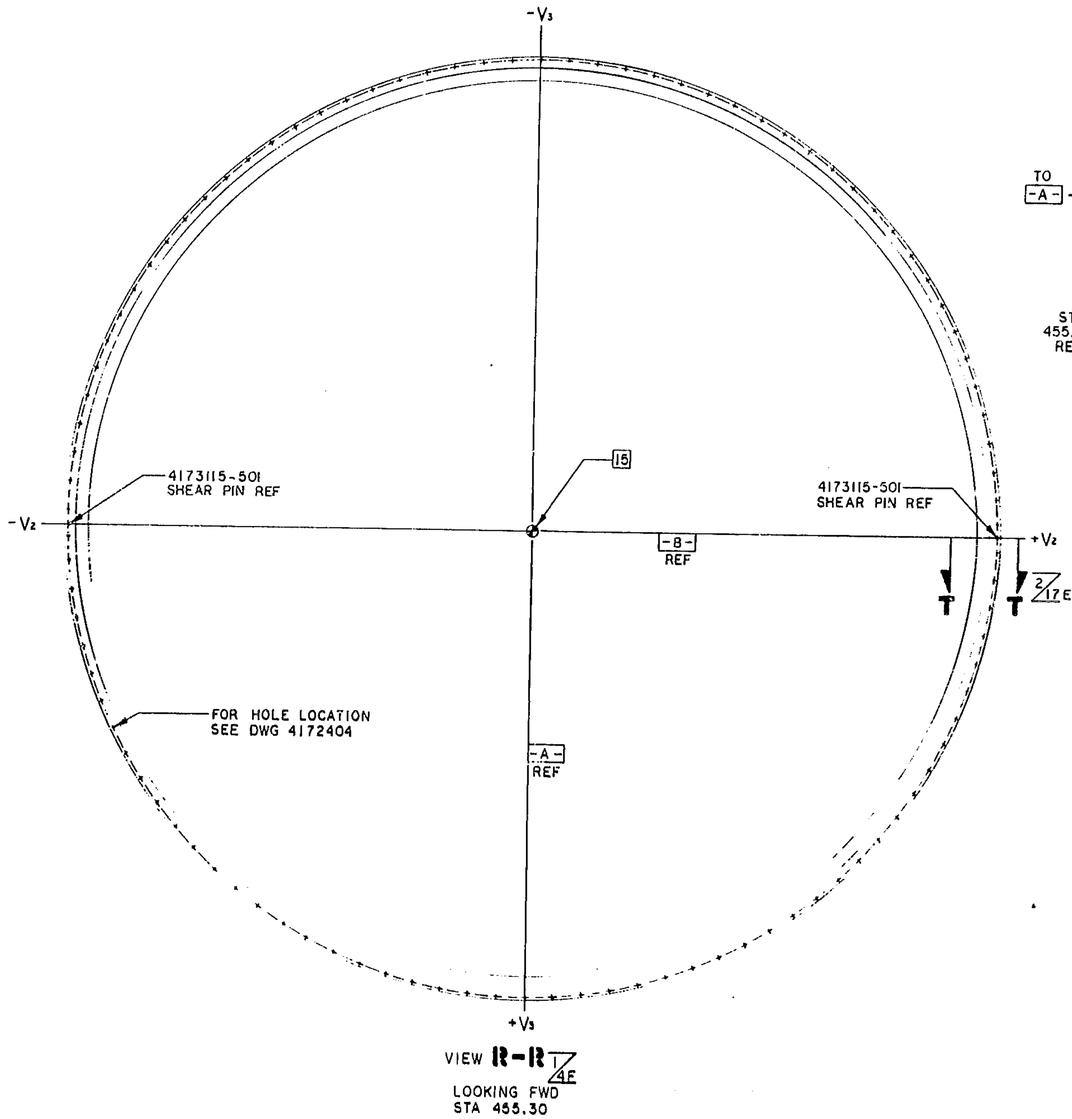

VIEW R-R 4E
LOOKING FWD
STA 455.30

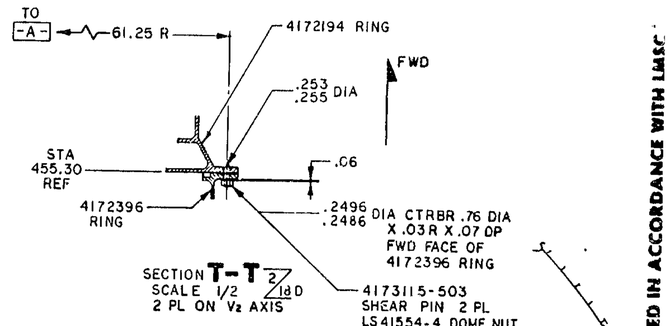

SECTION T-T 2/18D
SCALE 1/2
2 PL ON V2 AXIS

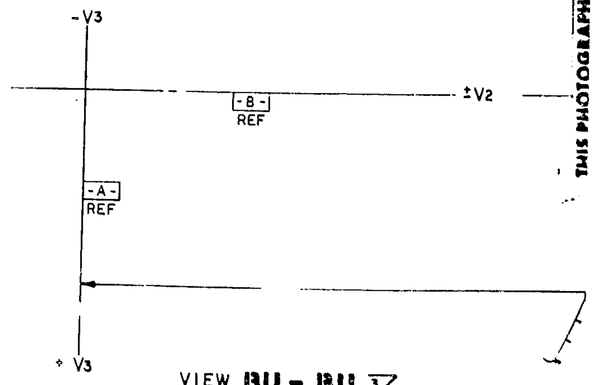

VIEW BU - BU 3/4G
SCALE 1/5
LOCATION OF FWD SCUFF PLATE
LOOKING AFT

THIS PHOTOGRAPHIC IMAGE WAS PRODUCED IN ACCORDANCE WITH LMSC

DRAWING NO	REV	SH
4171580	C	2

ZONE	LTR	REVISIONS DESCRIPTION	DATE	APVD
	C	ADDED CUTTING PLANE BU-BU REVISED DIMS IN VIEWS AA-AA & DET. AE. ADDED DEGREES IN VIEW AG-AG ADDED ALIGN FIXTURES IN VIEWS AG-AG, AF, AJ, AD AH	88 Nov 30	

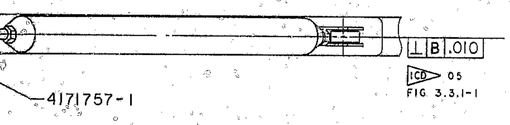

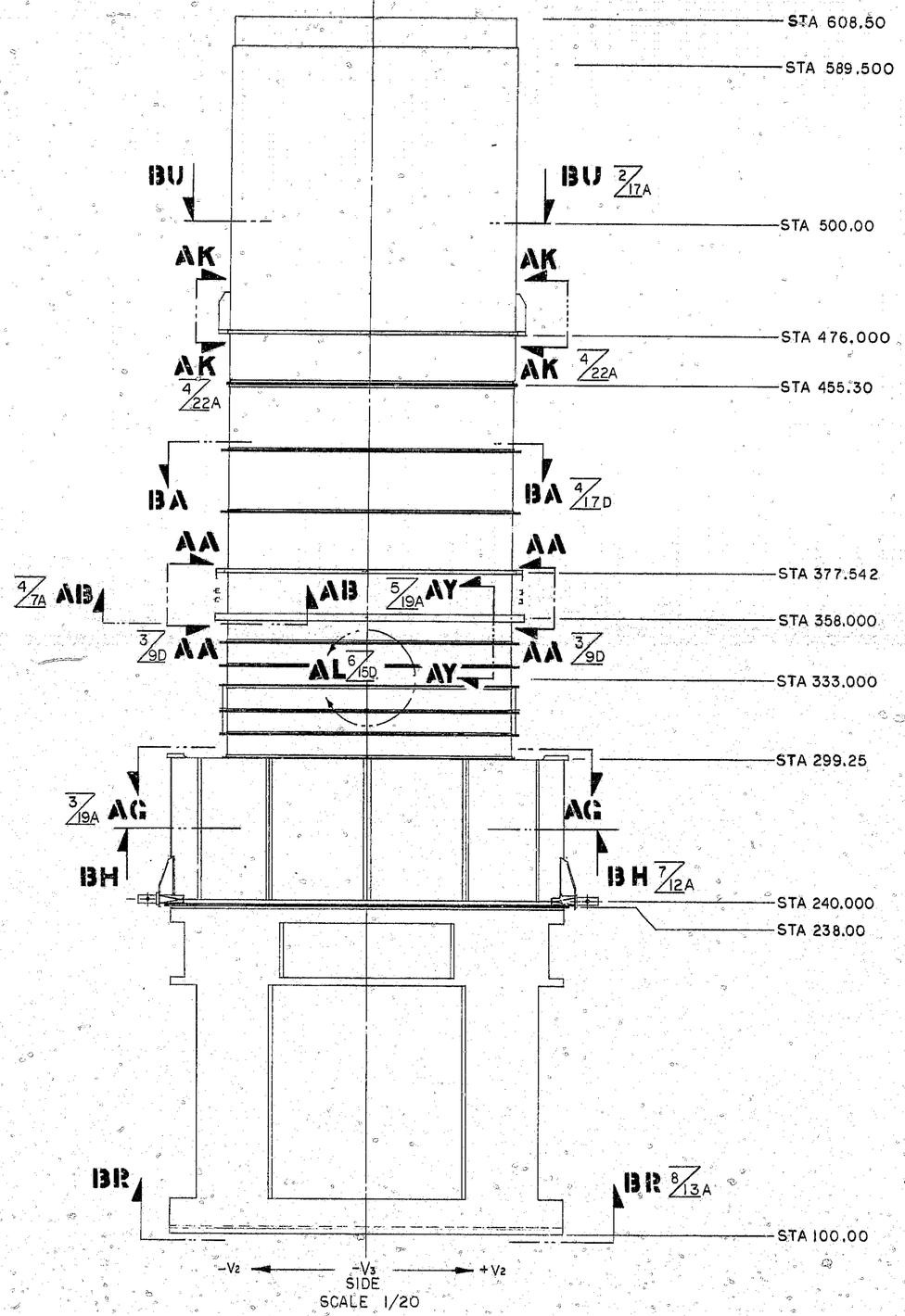

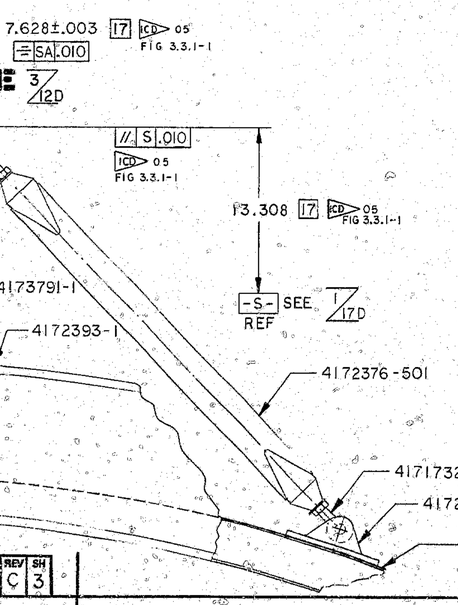

THIS PHOTOGRAPHIC IMAGE WAS PRODUCED IN ACCORDANCE WITH LMSC ENGINEERING DRAWING SERVICES STANDARD OPERATING PROCEDURES.

REV	SH
C	3

SIZE	CODE IDENT	DRAWING NO	REV
J	06887	4171580	C
SCALE 1/8		SHEET 3	

62-32

8.00 REF
TARGET HOLE
+V2
.875 REF
.250 DIA REF
8.00 REF
14.832 REF
24 2 PL
.250 DIA THRU REF
VIEW SHOWN AF 3/16D VIEW AJ 3/22E OPPOSITE
1/2 SCALE

SA DIODE BOX ASSY
ALIGN FIXTURE
25
4172247-1
4174206-1 (+V2)
4174207-1 (-V2)

AF 3/15F
ALIGN FIXTURE T420102-MTE-507

8.00 REF
8.00 REF
4172247-1
24 2 PL
ALIGN FIXTURE T420102-MTE-501
VIEW AD 3/18A
SCALE 1/2

TARGET HOLE ON RING
25
4172247-1
STA 298.95
10-24UNC-3B
15.00 REF
4172767-1

⊥|A|.010
STA 377.562
10 05 FIG 3.3.1-1
-SB- REF
20
4172377-501
4172371-1
4172393-1

STA 377.562
18 REF
7.628 REF 18
.711
13.308 18 REF
DETAIL AE 3/9C
SCALE 1/1

20
20
4171757-1
4172393-1
STA 358.000

VIEW AA-AA 3/6D 3/5D
SCALE 1/2
SA AFT LATCH

±V2
7.628±.003 17
=|SA|.010
10 05 FIG 3.3.1-1
4171777-1
-B-
AE 3/12D
//|S|.010
10 05 FIG 3.3.1-1
13.308 17
4172376-501
4173791-1
-S- SEE REF
4172393-1

REV	SH
C	3

DRAWING NO E4171580 REV C SH 3

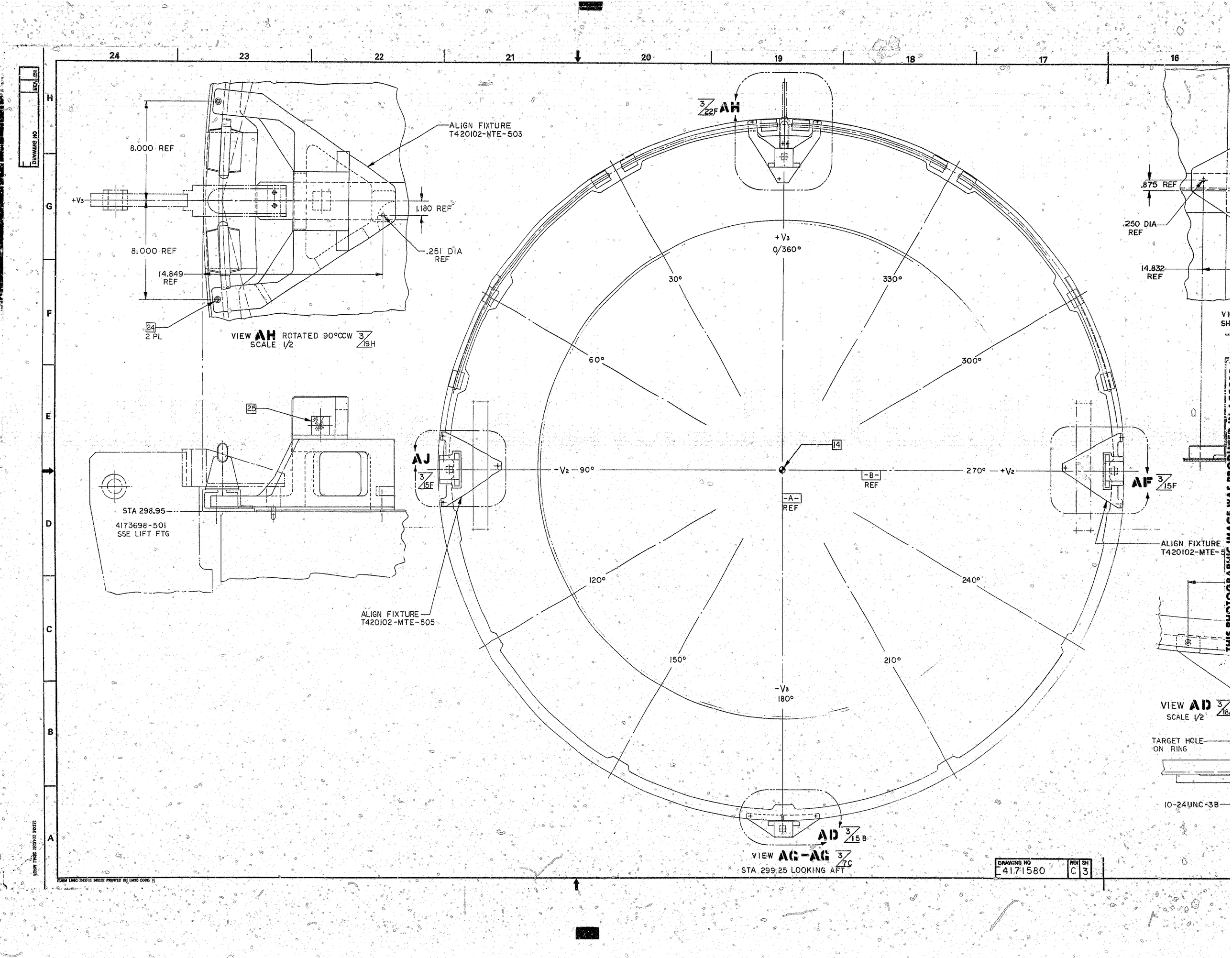

ALIGN FIXTURE
T420102-MTE-503
8.000 REF
8.000 REF
+V3
1.180 REF
.251 DIA
REF
14.849
REF
24
2 PL
VIEW AH ROTATED 90°CCW 3/19H
SCALE 1/2
25
STA 298.95
4173698-501
SSE LIFT FTG
ALIGN FIXTURE
T420102-MTE-505
3/22F AH
+V3
0/360°
30°
330°
60°
300°
AJ
3/15F
-V2 — 90°
14
-B-
REF
270° — +V2
AF 3/15F
-A-
REF
120°
240°
150°
210°
-V3
180°
AD 3/15B
VIEW AG-AG 3/7C
STA 299.25 LOOKING AFT
.875 REF
.250 DIA
REF
14.832
REF
ALIGN FIXTURE
T420102-MTE-5
VIEW AD 3/18
SCALE 1/2
TARGET HOLE
ON RING
10-24UNC-3B
DRAWING NO
4171580
REV C
SH 3

ZONE	LTR	REVISIONS DESCRIPTION	DATE	APPD
	C	ADDED FLAGS & SPEC. NOS. REVISED VIEWS AC-AC, AB-AB, AK-AK & BA-BA.		

STA 358.000

AC

18

94.000 TO -A- (ICD 2-19001 FIG 3.3.1.2.2-1)

4172360-1 REF

4172360-1 REF

4172361-501 REF

+V3 -V3 -V2

-B- REF

14.000

AC 4/2B

VIEW AB-AB 3/5F
ROTATED 90° CW
LOOKING FWD

STA 358.000 (ICD 2-19001 TABLE 3.3.1.1-1)

18

4172355-501 REF

4172362-501 REF

4172356-501 REF

4172393-1 REF

4172363-1 REF

VIEW AC-AC 4/7B

THIS PHOTOGRAPHIC IMAGE WAS PRODUCED IN ACCORDANCE WITH LMSC ENGINEERING DRAWING SERVICES STANDARD OPERATING PROCEDURES.

SIZE	CODE IDENT	DRAWING NO	REV
D	J06887	4171580	C

SCALE 1/2" | SHEET 1

4171580 IC

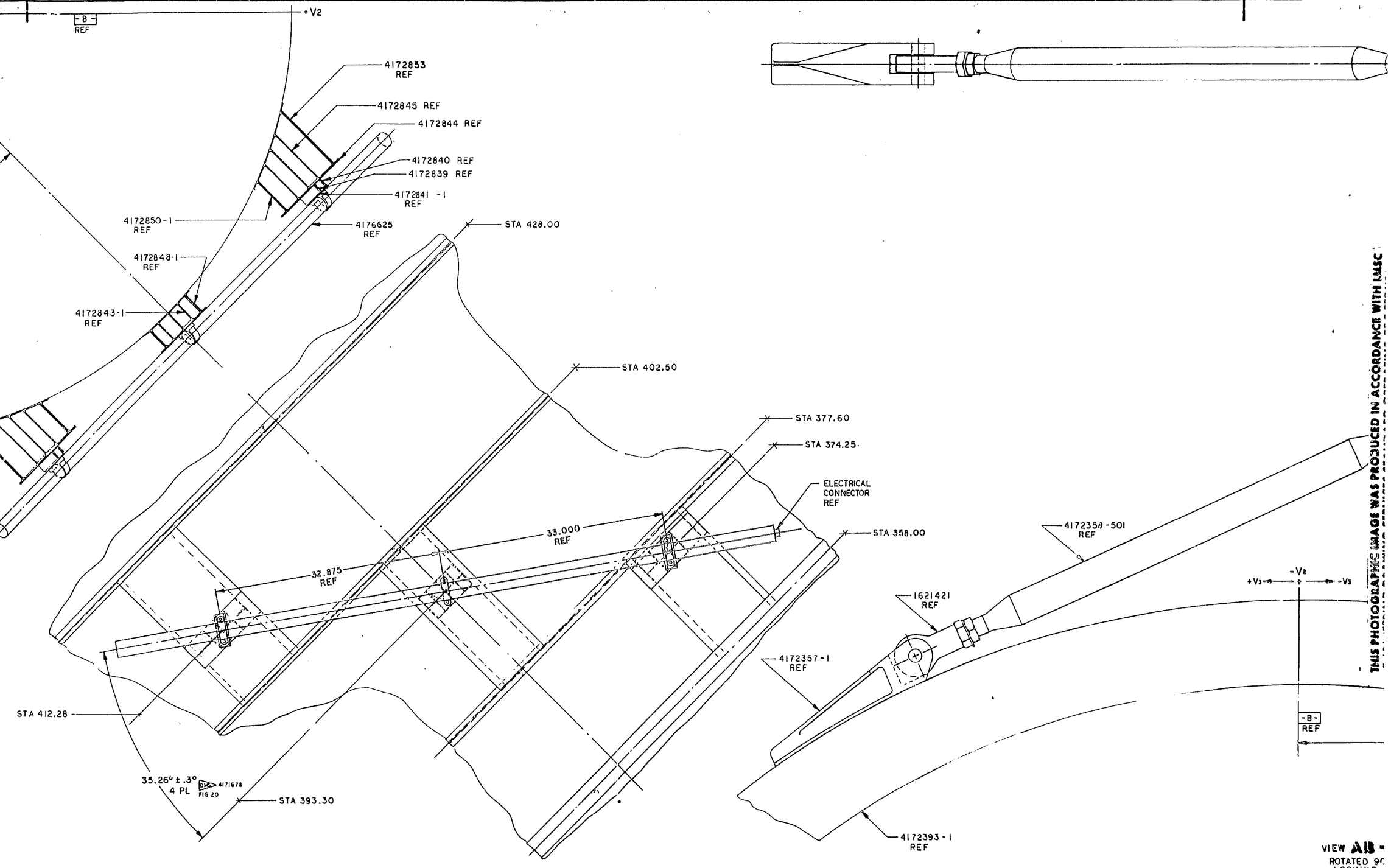

THIS PHOTOGRAPHIC IMAGE WAS PRODUCED IN ACCORDANCE WITH LMSC

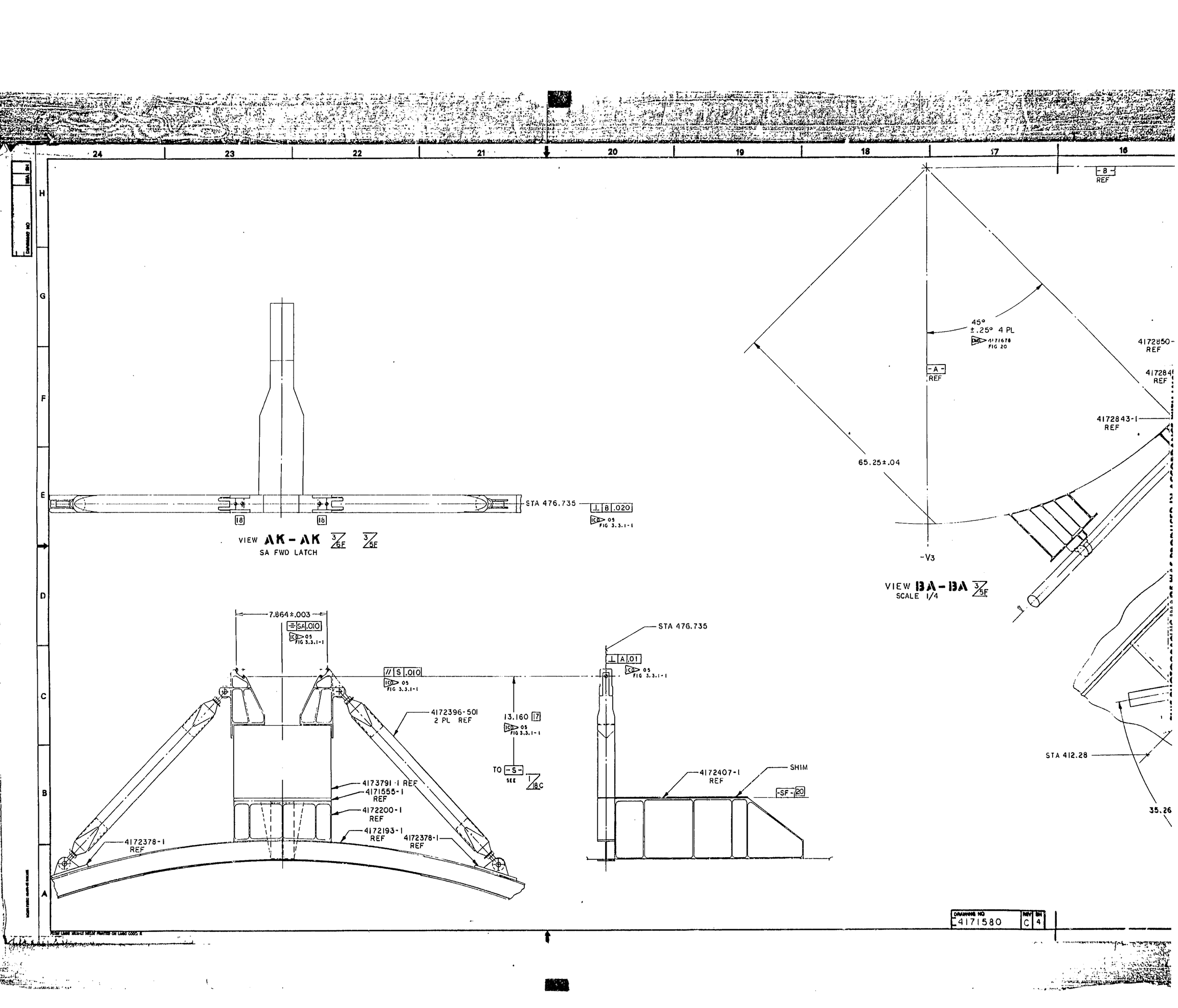
24
23
22
21
20
19
18
17
16
H
G
F
E
D
C
B
A
-B-
REF
45°
±.25° 4 PL
4171678
FIG 20
-A-
REF
4172850-
REF
4172843-1
REF
65.25±.04
-V3
VIEW BA-BA 3/5F
SCALE 1/4
STA 476.735
⊥ B .020
05
FIG 3.3.1-1
VIEW AK-AK 3/6F 3/5F
SA FWD LATCH
18
16
7.864±.003
⌯ SA .010
05
FIG 3.3.1-1
// S .010
05
FIG 3.3.1-1
4172396-501
2 PL REF
13.160 17
05
FIG 3.3.1-1
TO -S-
SEE 1/18C
4173791-1 REF
4171555-1
REF
4172200-1
REF
4172193-1
REF
4172378-1
REF
4172378-1
REF
STA 476.735
⊥ A .01
05
FIG 3.3.1-1
4172407-1
REF
SHIM
-SF- 20
STA 412.28
35.26
DRAWING NO
4171580
REV
C
SH
4

ZONE	LTR	REVISIONS DESCRIPTION	DATE	APPD
	C	ADDED FLAG NOTES		

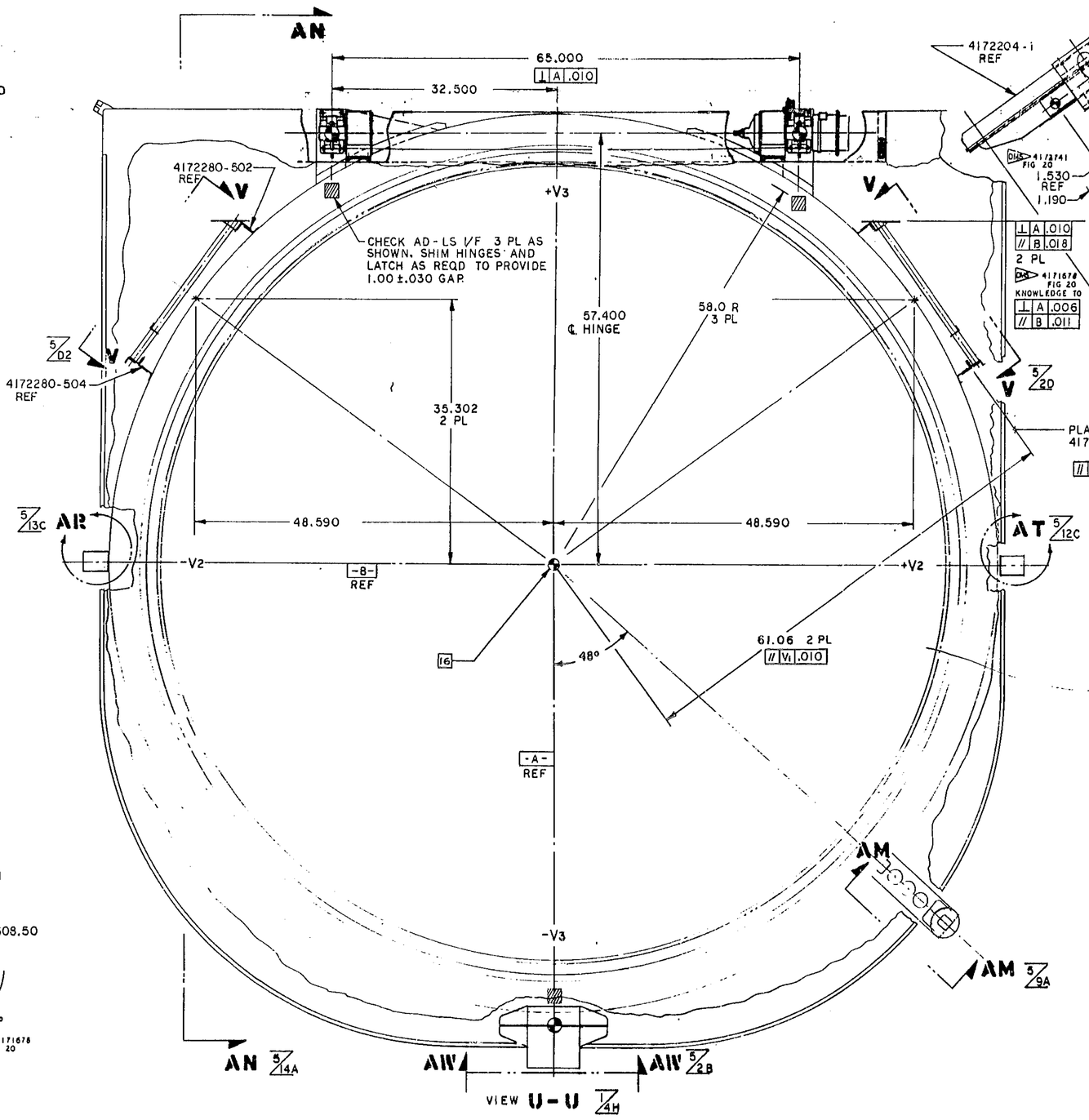

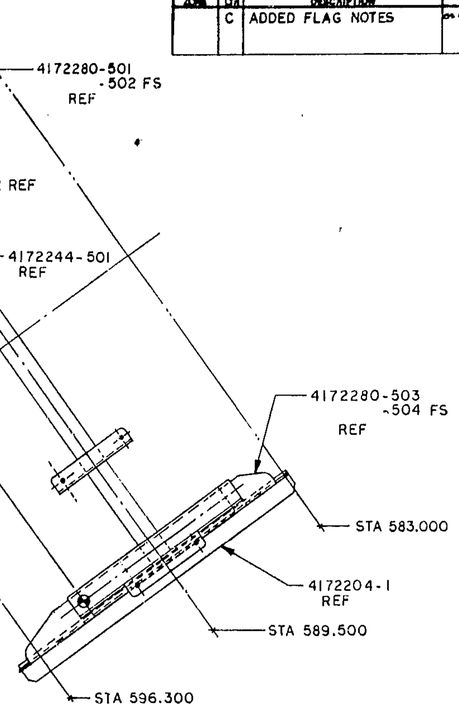

VIEW **V - V** 5/4F 5/8F
SCALE 1/2
MAGNETOMETER TRAY

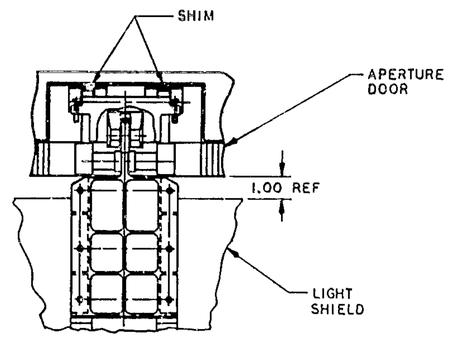

VIEW **AW - AW** 5/5A
SCALE 1/2
LATCH MECHANISM NOT SHOWN

THIS PHOTOGRAPHIC IMAGE WAS PRODUCED IN ACCORDANCE WITH LMSC ENGINEERING DRAWING SERVICES STANDARD OPERATING PROCEDURES.

SIZE	CODE IDENT	DRAWING NO	REV
D	J06887	4171580	C
SCALE 1/31		SHEET 5	

4171580 1C

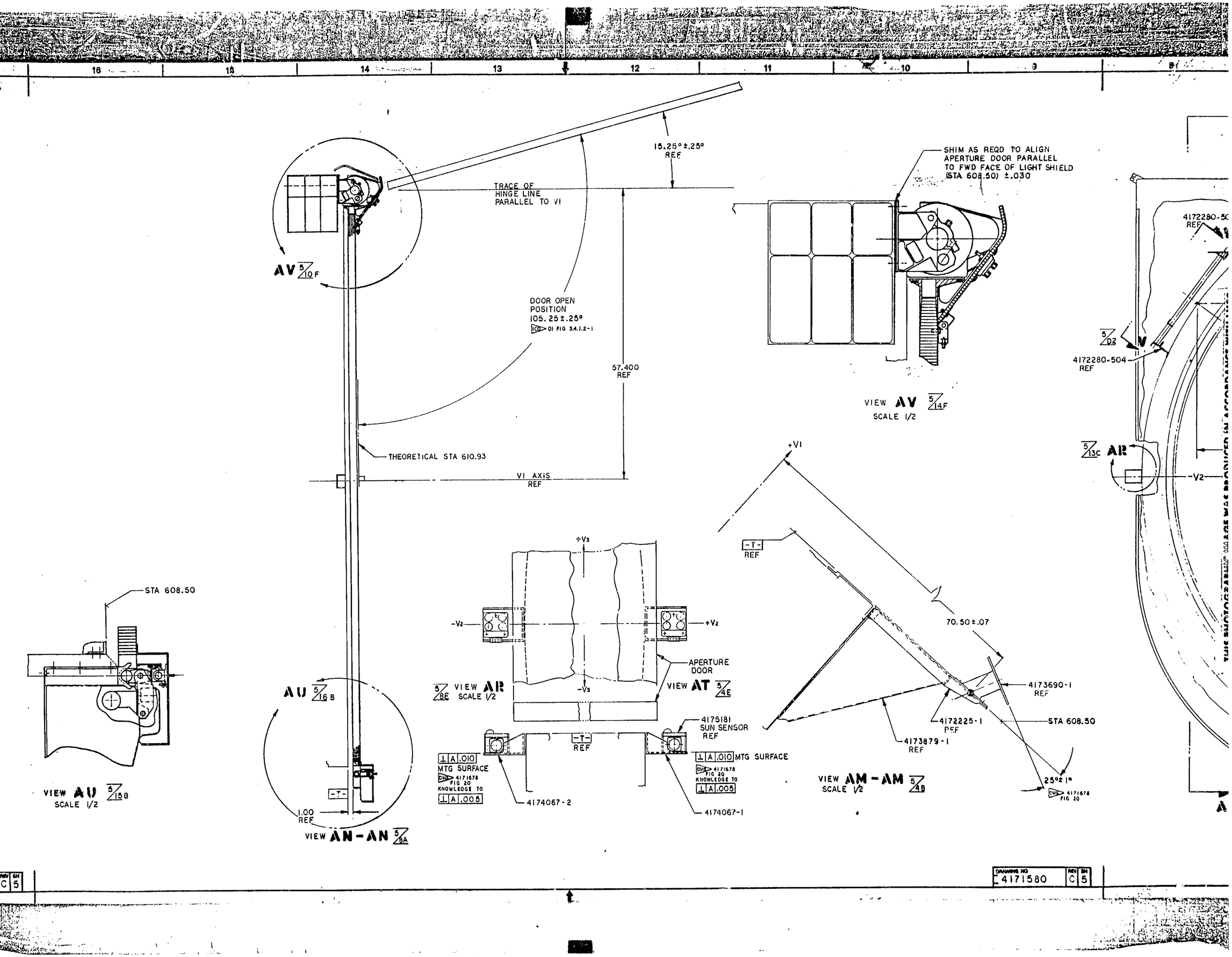

16
15
14
13
12
11
10
9
8
15.25° ±.25° REF
TRACE OF HINGE LINE PARALLEL TO V1
AV 5/10F
DOOR OPEN POSITION 105.25 ±.25°
57.400 REF
THEORETICAL STA 610.93
V1 AXIS REF
SHIM AS REQD TO ALIGN APERTURE DOOR PARALLEL TO FWD FACE OF LIGHT SHIELD (STA 608.50) ±.030
VIEW AV 5/14F
SCALE 1/2
4172280-504 REF
5/D2
5/13C AR
-V2
+V1
-T- REF
70.50 ±.07
4173690-1 REF
4172225-1 REF
STA 608.50
4173879-1 REF
25° ± 1°
VIEW AM-AM 5/4B
SCALE 1/2
+V3
-V2
+V2
-V3
APERTURE DOOR
5/8E VIEW AR SCALE 1/2
VIEW AT 5/4E
4175181 SUN SENSOR REF
-T- REF
⊥ A .010 MTG SURFACE
⊥ A .005
4174067-2
4174067-1
STA 608.50
VIEW AU 5/15B
SCALE 1/2
AU 5/16B
1.00 REF
VIEW AN-AN 5/8A
DRAWING NO 4171580
REV C
SH 5

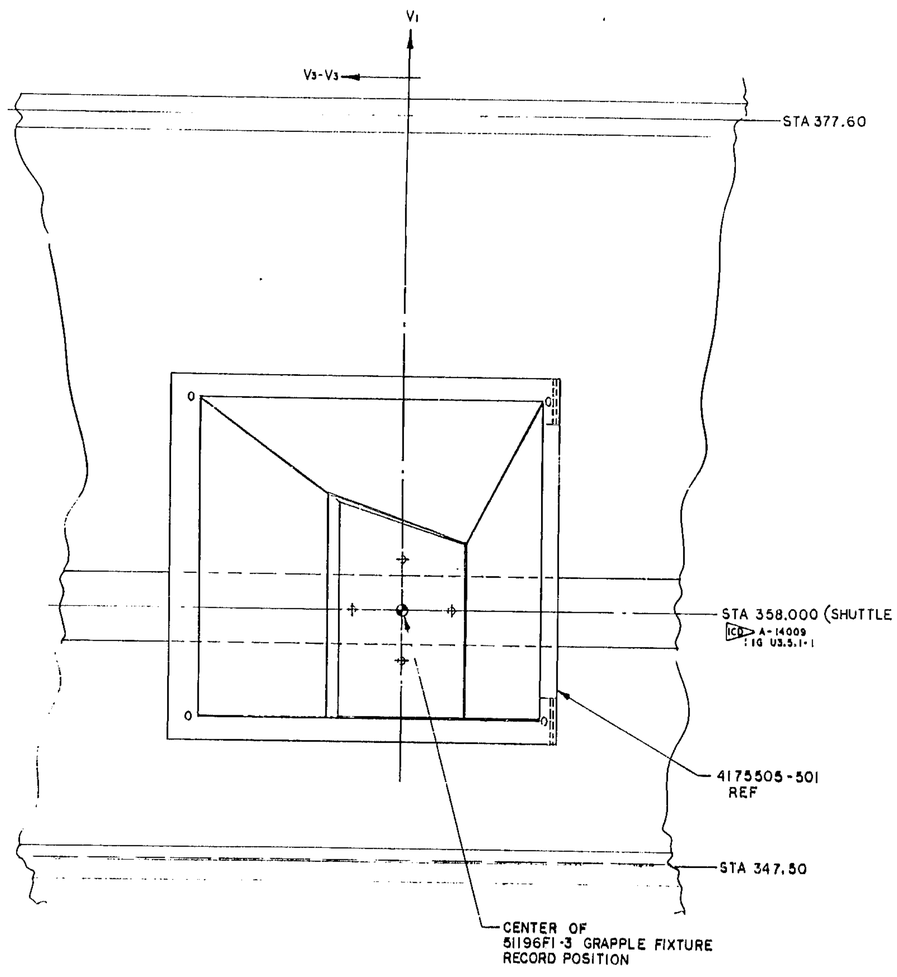

VIEW AY - AY 3/5E
SCALE 1/2

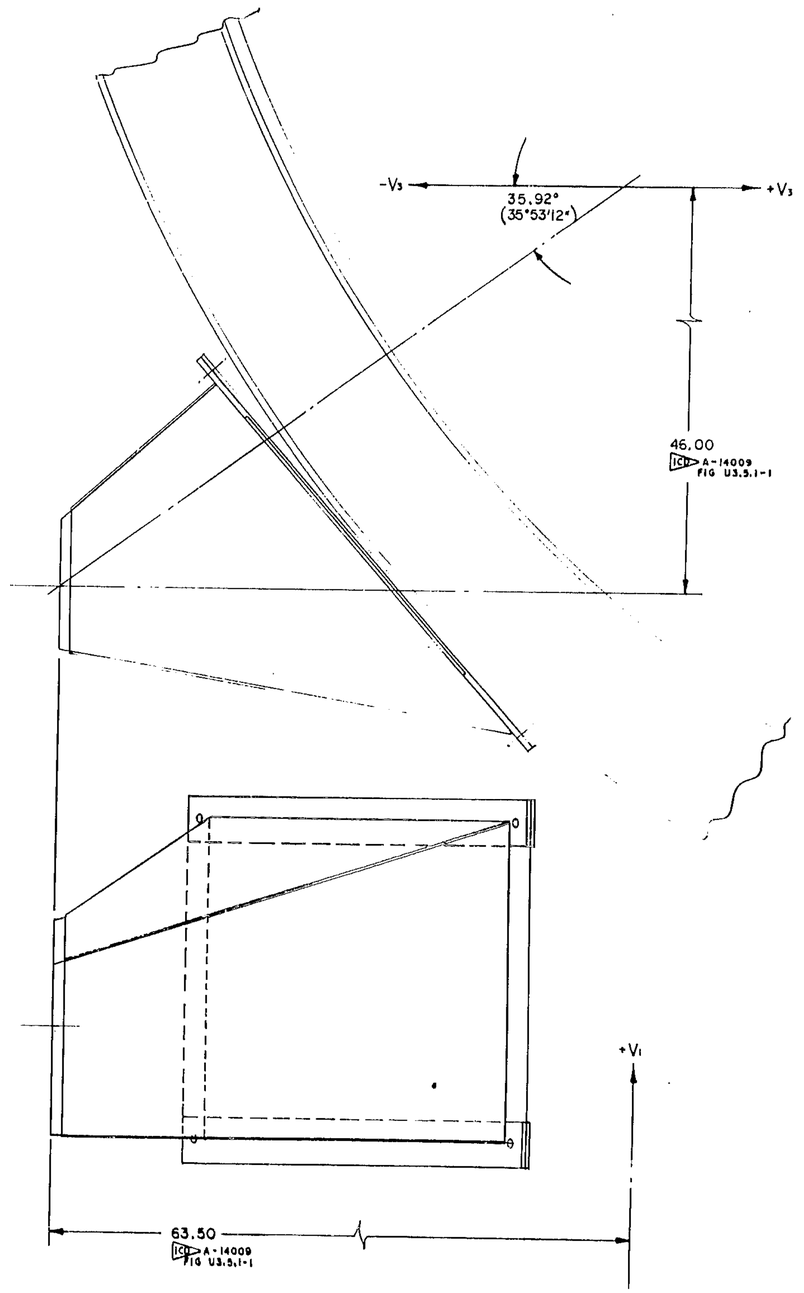

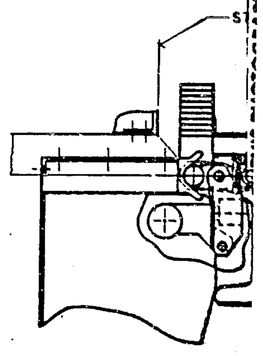

VIEW AU 5/15B
SCALE 1/2

DRAWING NO	REV	SH
4171580	C	5

REVISIONS				
ZONE	REV	DESCRIPTION	DATE	APVD
	B	THIS SHEET ADDED	83 NOV 30	Z.CHAPMAN
	C	ADDED FLAG NOTES	84 FEB 10	Z.CHAPMAN

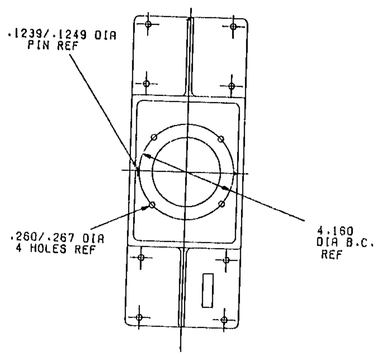

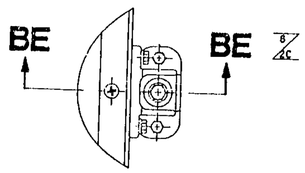

DETAIL VIEW BD 6/2Q
SCALE 2/1

90° ± .1° (DEPLOYED)

18 DMS 4171768
PARA 3.3.1.4.50
& FIG 20
RECORD KNOWLEDGE TO .02°

//.005 B SEE SHT 1

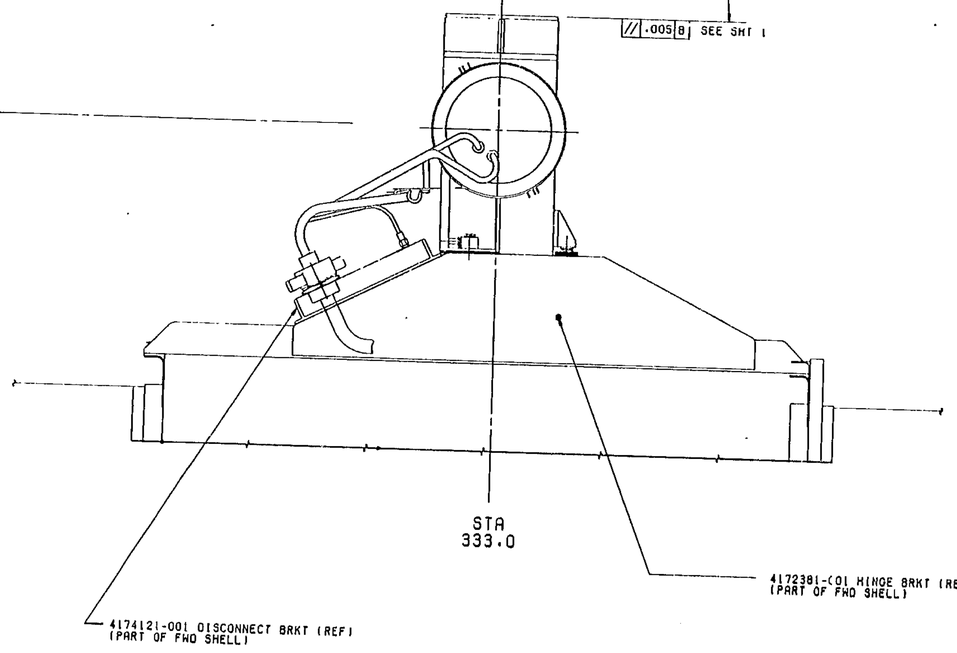

HIGH GAIN ANTENNA
ALIGNMENT DETAILS
SCALE 1/2

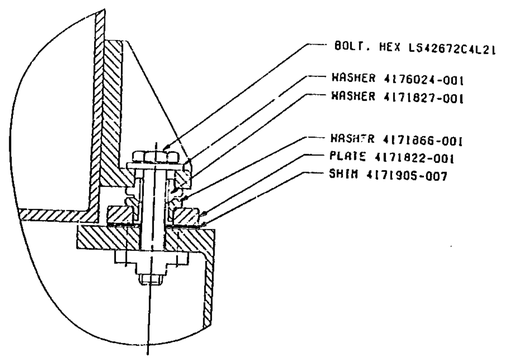

SECTION BE - BE 6/2O
SCALE 2/1

THIS PHOTOGRAPHIC IMAGE WAS PRODUCED IN ACCORDANCE WITH LMSC ENGINEERING DRAWING SERVICES STANDARD OPERATING PROCEDURES.

SIZE	FSCM NO.	DRAWING NO.	REV
J	06887	4171580	C
SCALE 1/3		SHEET 6	

62-32

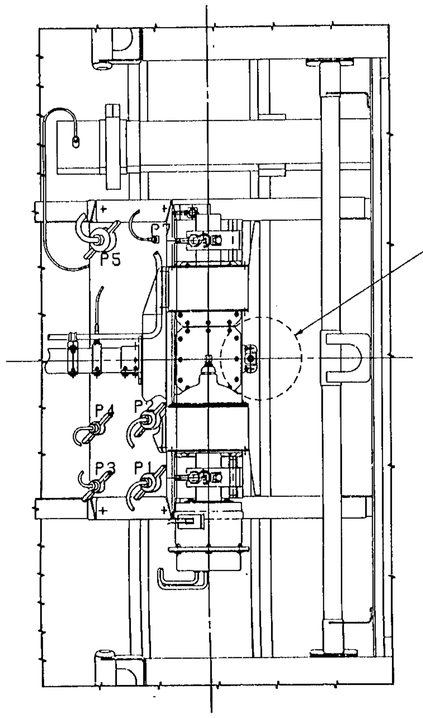

VIEW **AL** 3/6E

SEE DETAIL **BD** 6/2F

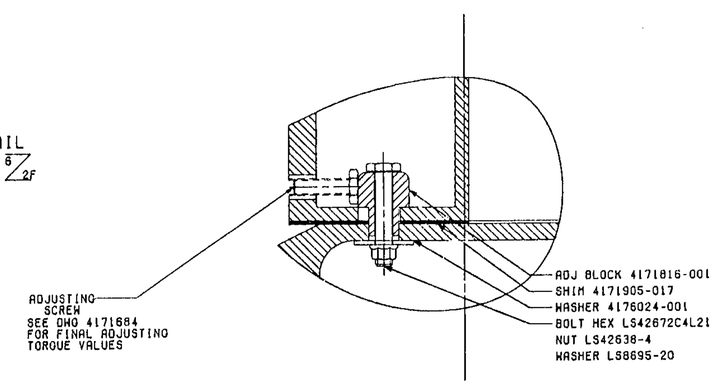

DETAIL VIEW **BC** 6/14C
SCALE 1.5/1

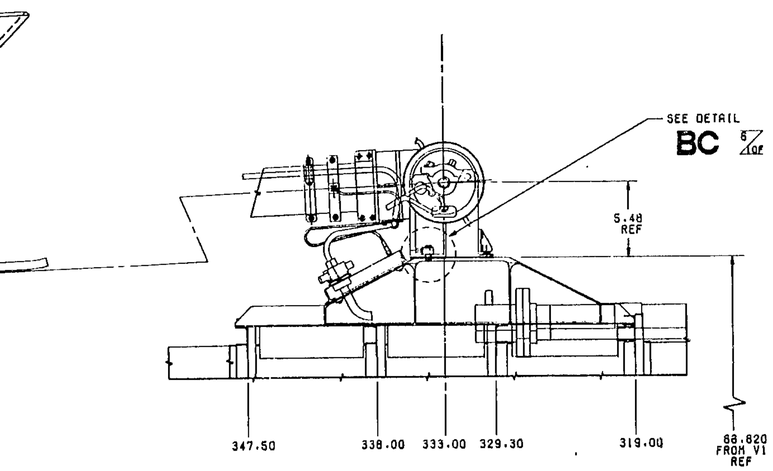

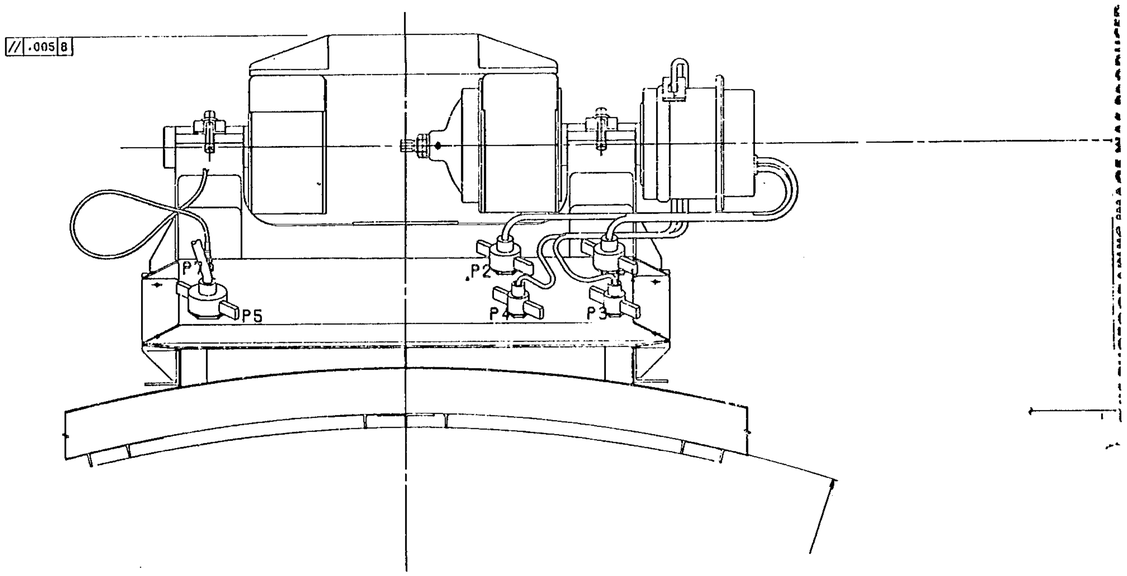

SIDE VIEW
SCALE 1/2

DRAWING NO 4171580 | REV C | SH 6

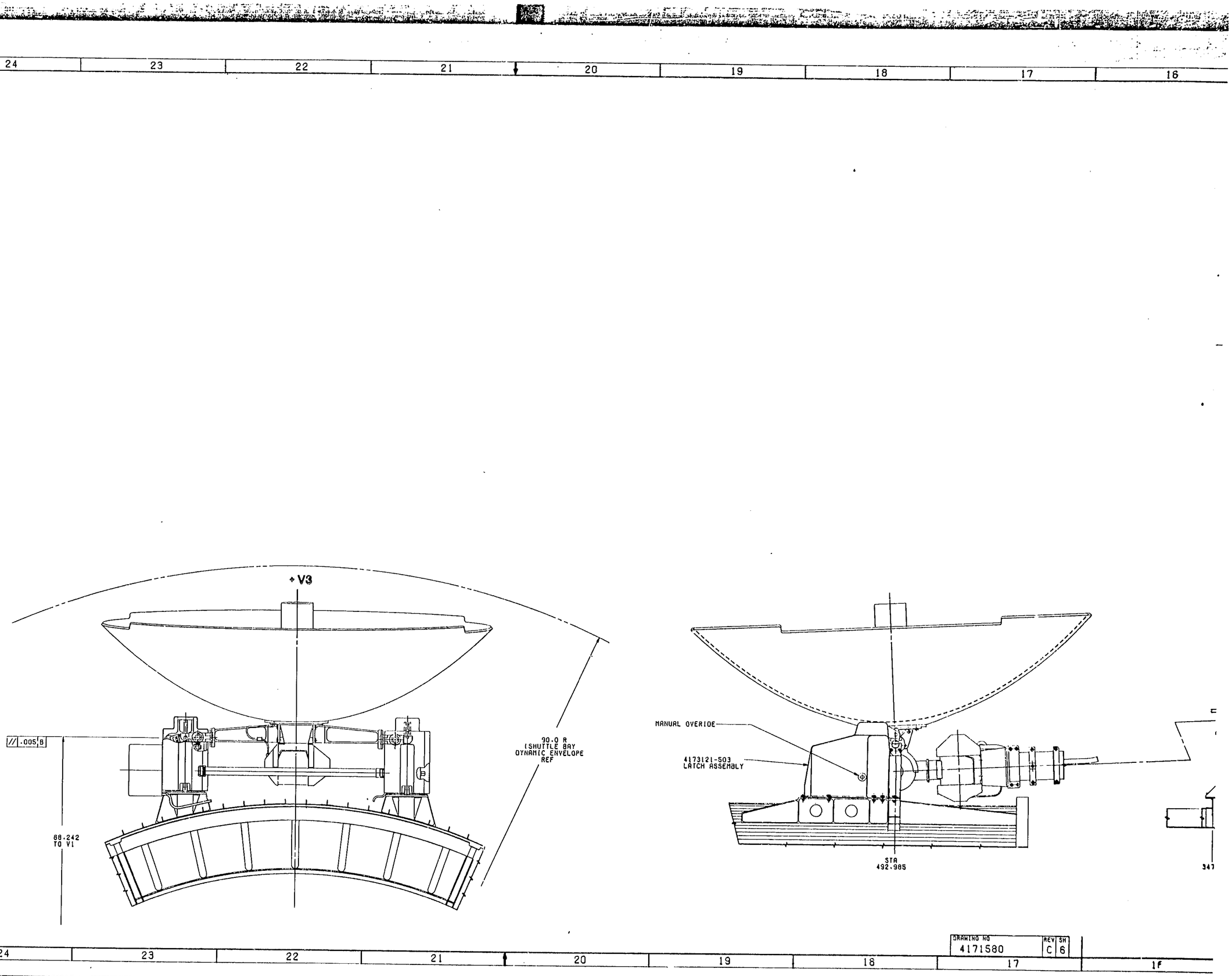

DRAWING NO	REV	SH
4171580	C	6

REVISIONS				
ZONE	REV	DESCRIPTION	DATE	APVD
	C	ADDED FLAGS & FLAG NOTES	84 JAN 2[illegible]	[illegible] CHAPPAN

- V1

.010
COPLANAR
4 PL

4171463

4175569

20° ±.15°

OMS 4171678 FIG 20
RECORD POSITION OF
GROUND KNOWLEDGE
WITHIN .08" 4 PL

STA
240.00

RWA

RWA

SECTION
BF - BF

STA
298.95

20° ±.15°
REF

+ V1

USE CONTROLLED TOOL
.3750 +.0020 -.0000
DIA 3 PL
⌖ RI Ø .010

-RI-

23.750 DIA
BSC

120°

120°

22.750 DIA
REF

SIZE	FSCM NO.	DRAWING NO.	REV
J	06887	4171580	C
SCALE 1/16		SHEET 7	

62-32

4171580 10

THIS PHOTOGRAPHIC IMAGE WAS PRODUCED IN ACCORDANCE WITH LMSC ENGINEERING DRAWING SERVICES STANDARD OPERATING PROCEDURES.

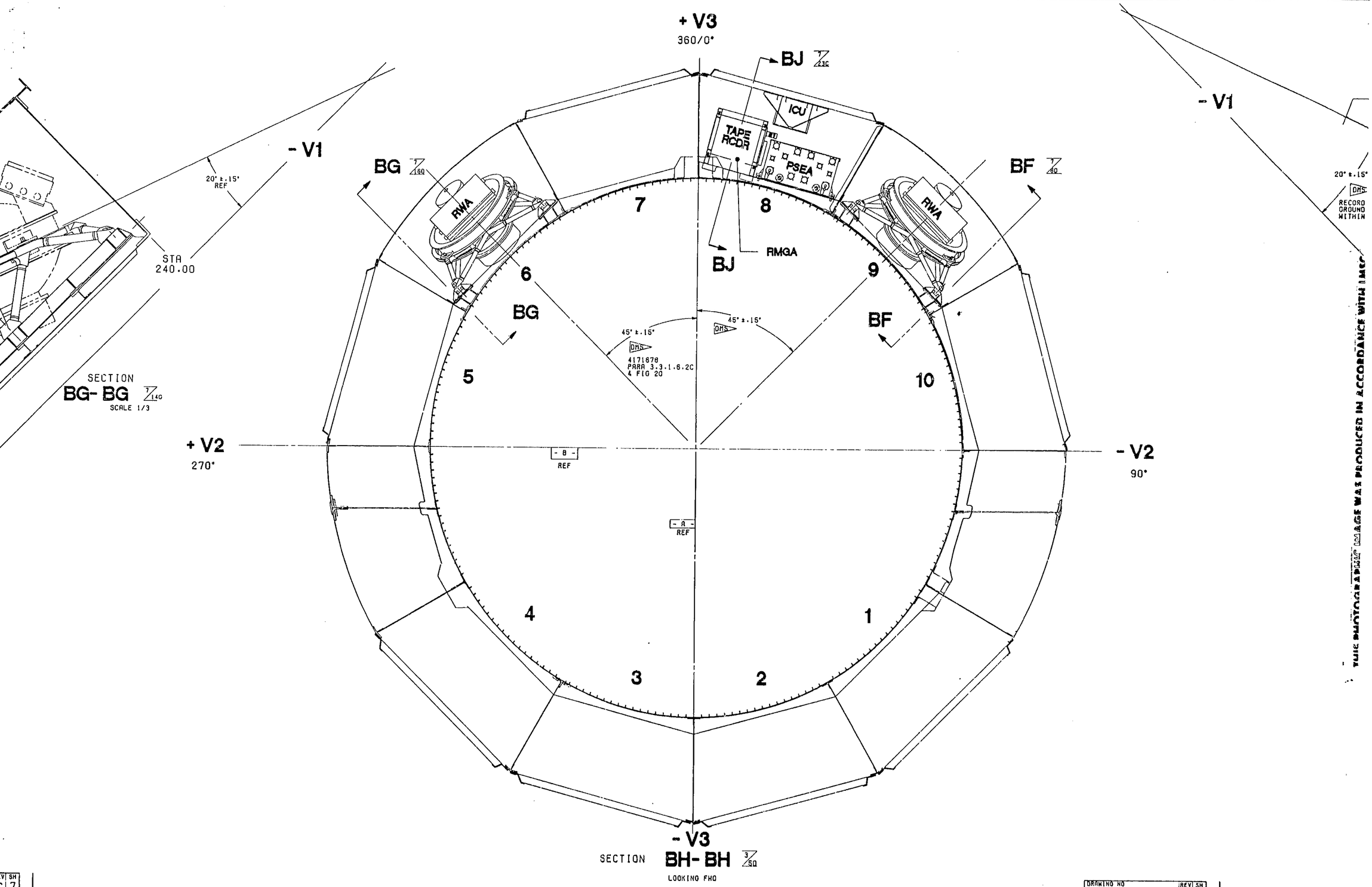

THIS PHOTOGRAPHIC IMAGE WAS PRODUCED IN ACCORDANCE WITH LMSC

DRAWING NO	REV	SH
4171580	C	7

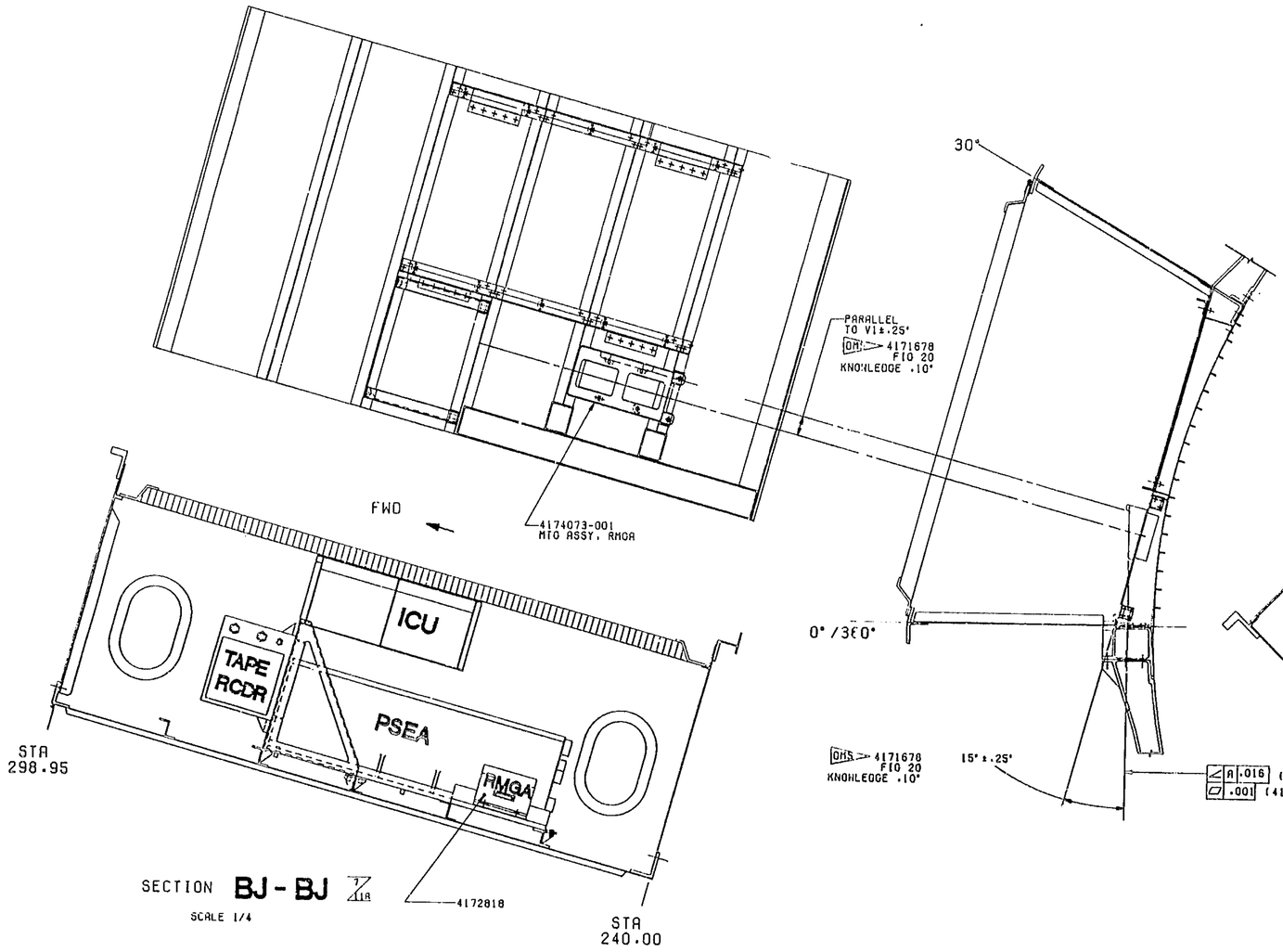

SECTION **BJ - BJ**

SCALE 1/4

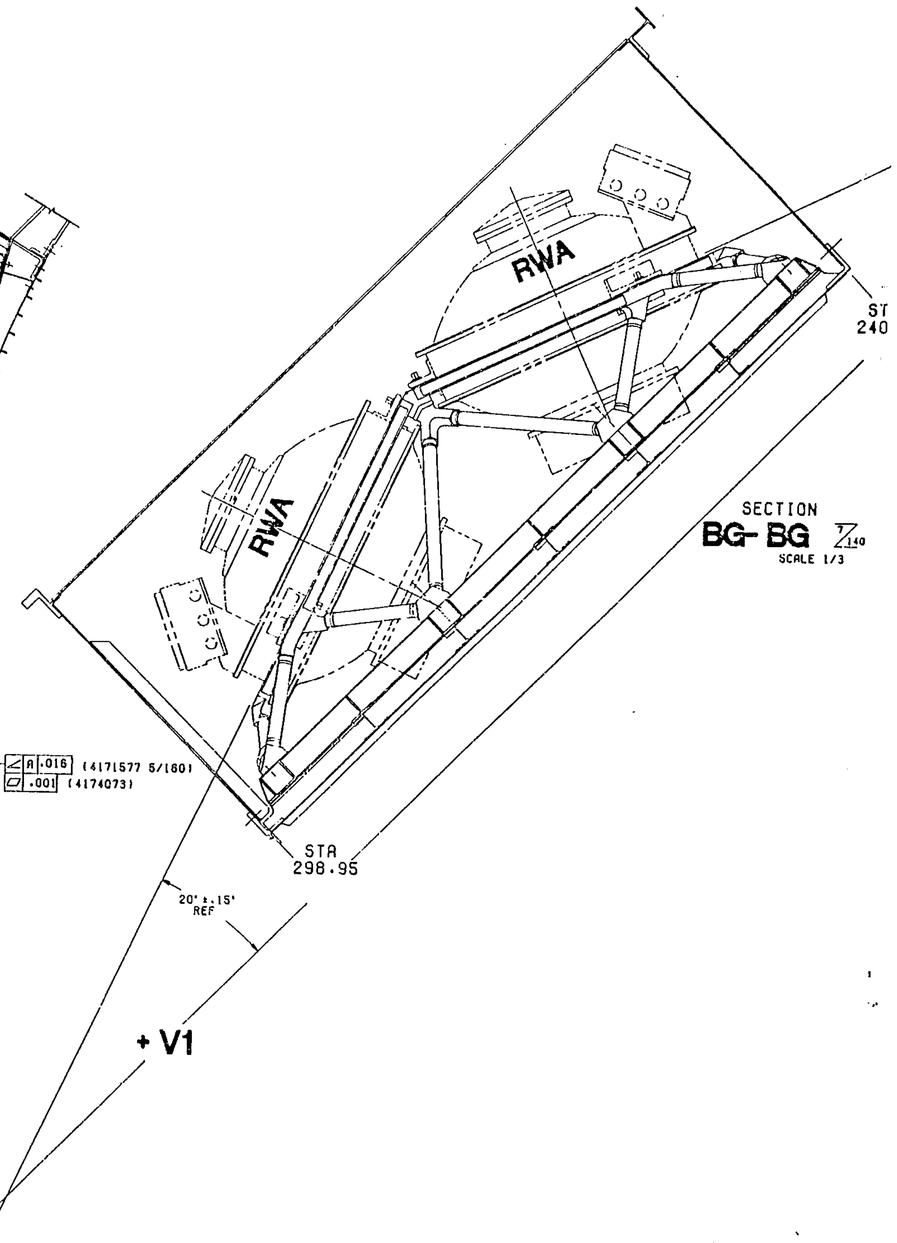

SECTION **BG- BG**

SCALE 1/3

REVISIONS				
ZONE	REV	DESCRIPTION	DATE	APVD
	C	ADDED ICD FLAGS ADDED TOL TO BERTHING PINS	84 JAN 5	J.Z.CHAPMAN

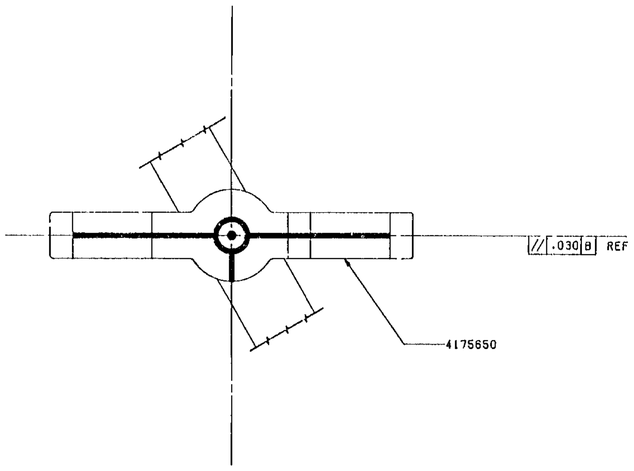

VIEW **BK** 3/20

SCALE 1/2

RMS CAMERA TARGET INSTALLATION

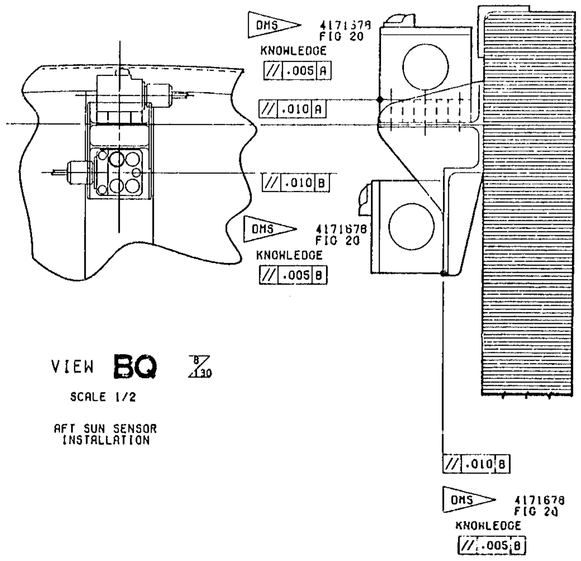

VIEW **BQ** 8/20

SCALE 1/2

AFT SUN SENSOR INSTALLATION

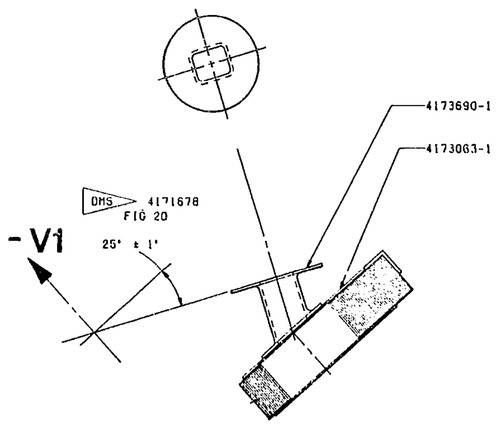

SECTION **BL - BL** 5/10

SCALE 1/2

AFT LOW GAIN ANTENNA INSTALLATION

SIZE	CLM NO.	DRAWING NO.	REV
J	06887	4171580	C
SCALE 1/16		SHEET 8	

62-32

THIS PHOTOGRAPHIC IMAGE WAS PRODUCED IN ACCORDANCE WITH LMSC ENGINEERING DRAWING SERVICES STANDARD OPERATING PROCEDURES.

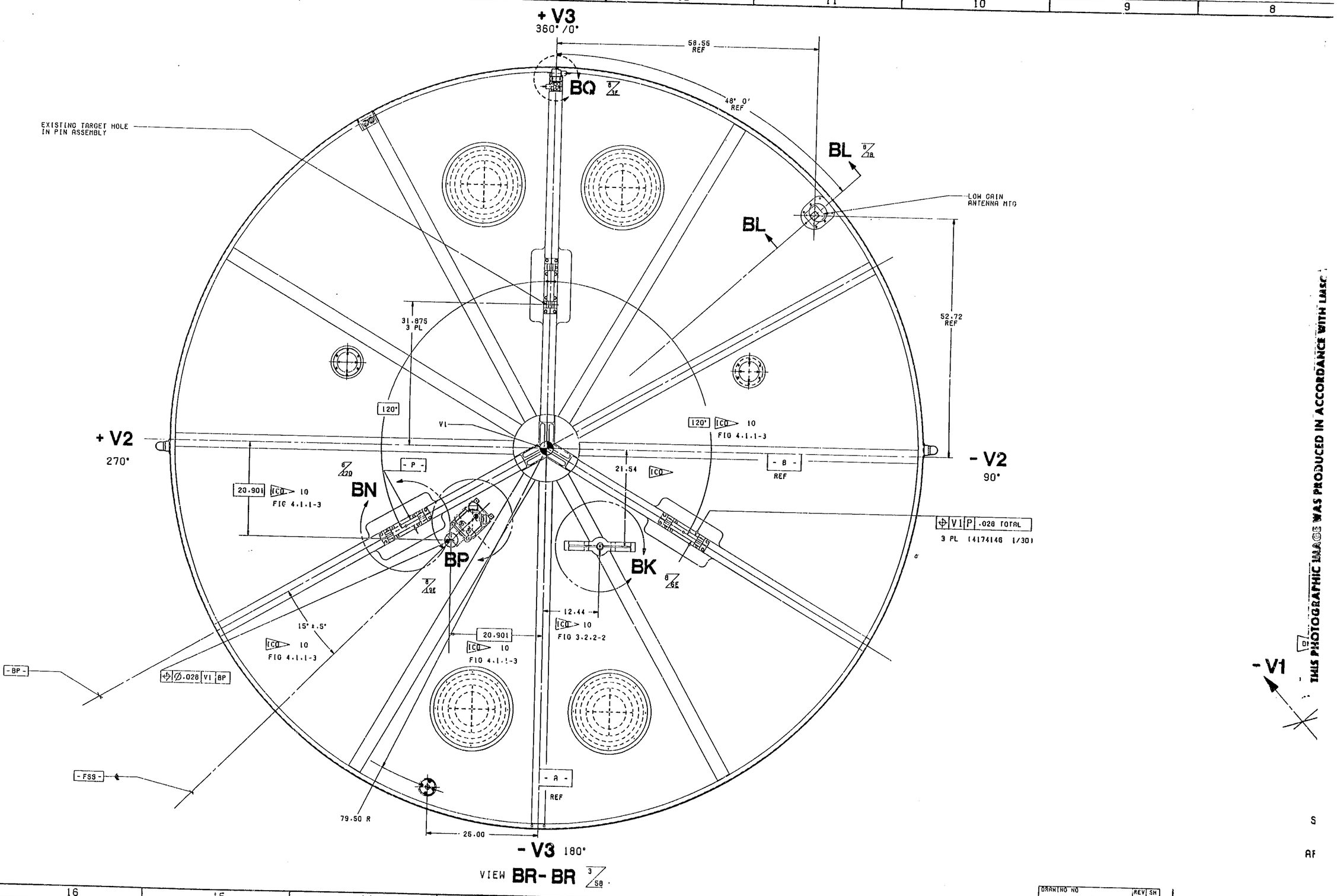

THIS PHOTOGRAPHIC IMAGE WAS PRODUCED IN ACCORDANCE WITH LMSC

DRAWING NO 4171580 REV C SH 8

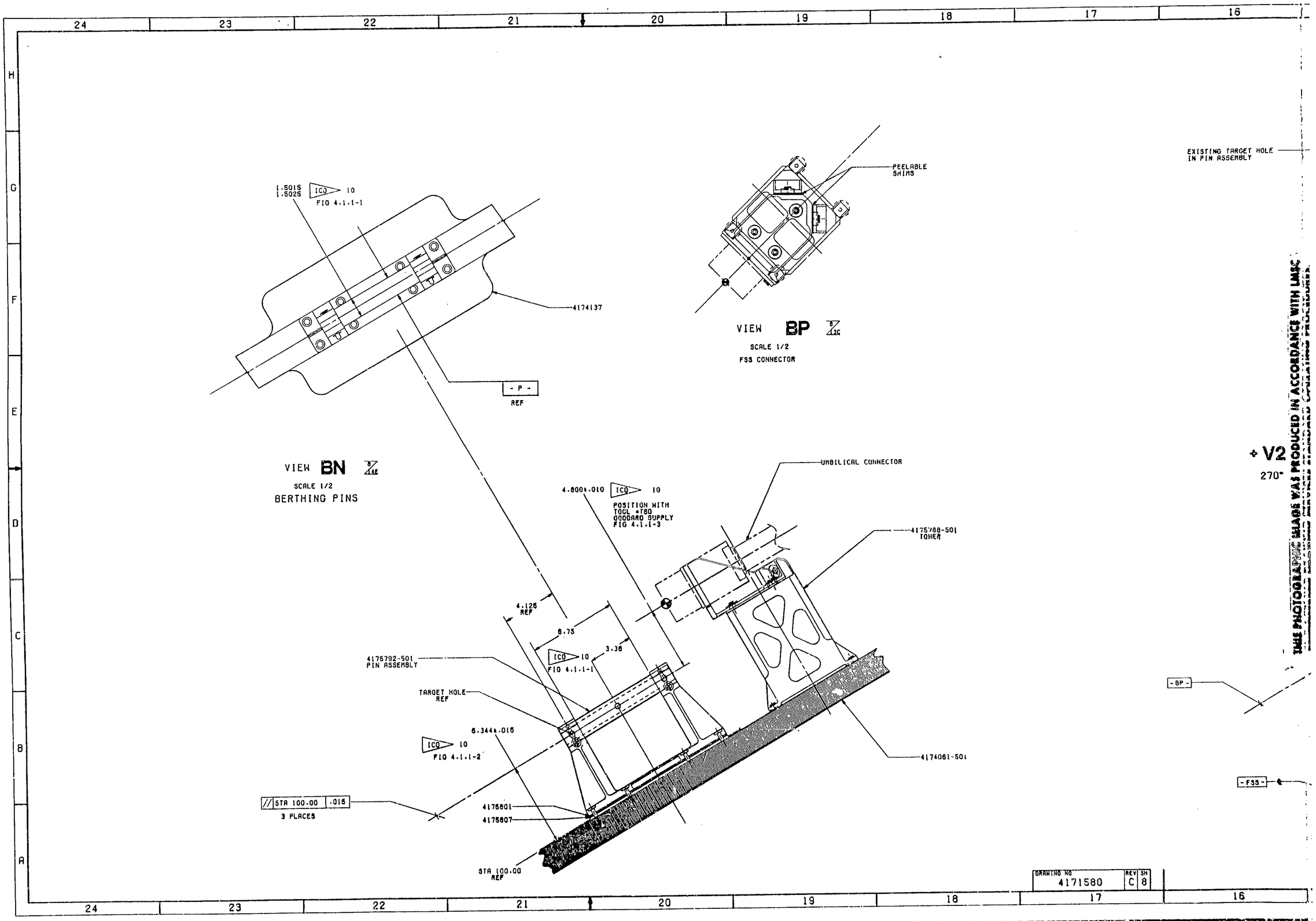

THIS PHOTOGRAPHIC IMAGE WAS PRODUCED IN ACCORDANCE WITH LMSC