4171583,01,A,01
9051E
STD'L1.

REVISIONS				
ZONE	REV	DESCRIPTION	DATE	APVD
	A	REVISED TO SHOW NEW GRAPPLE FIXTURE DESIGN AND ADDITION OF ADAPTER PLATE AND GROUNDING SYSTEM. ADDED "STBD" TO DRAWING TITLE.	12/6/84	MORSE McCORD FORD DIRULCIUS

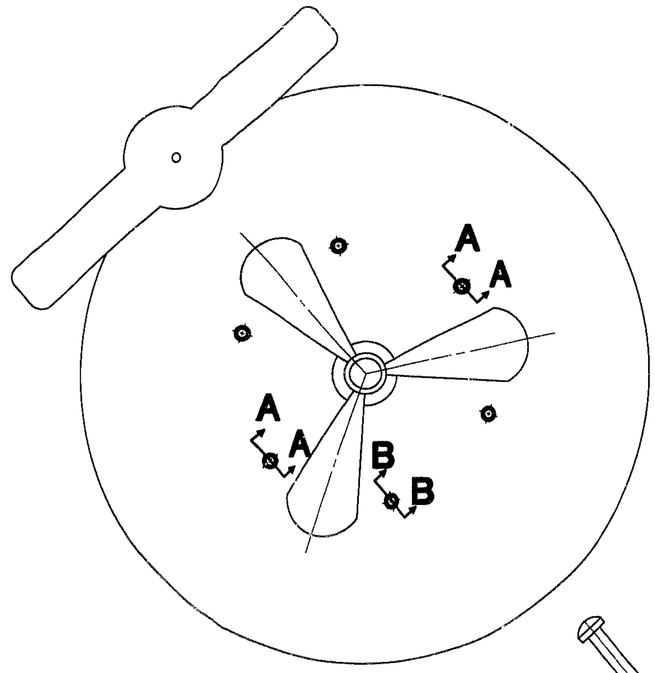

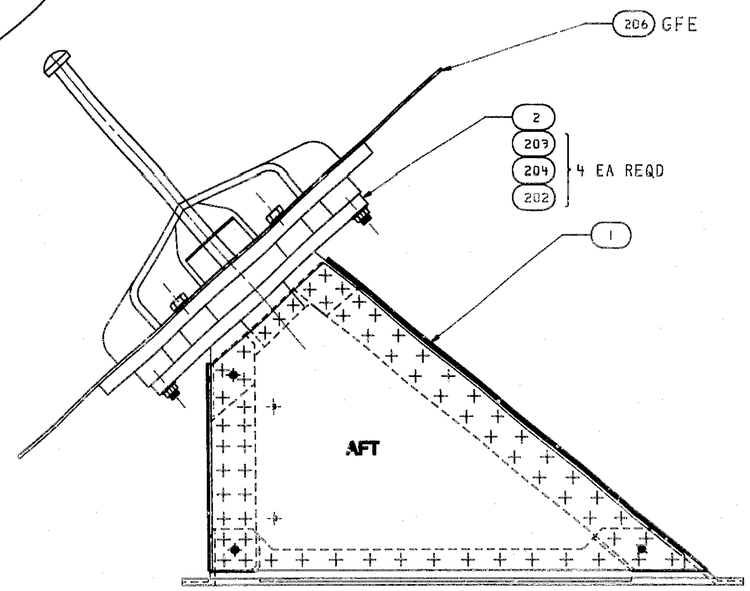

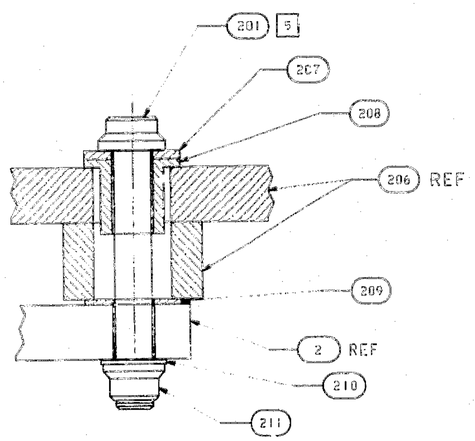

SECTION A-A
ROTATED 48° CCW
2 PLCS
SCALE 2/1

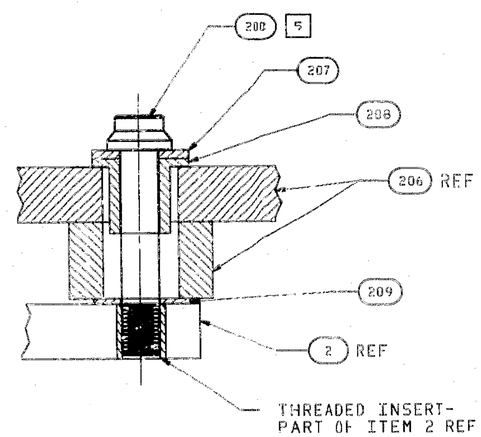

SECTION B-B
ROTATED 48° CCW
4 PLCS
SCALE 2/1

SEE PL4171583 FOR PARTS LIST AND NOTES

4171568		UNLESS OTHERWISE SPECIFIED DIM. ARE IN INCHES. TOLERANCES ON: FRACTIONS = ± 1/16 DECIMALS: .X = ± .1 .XX = ± .03 .XXX = ± .010 ANGLES = ± 2 DEG.	DATE 09-01-82 DWN DAVE ELLIS APVD P.Y.SHIGETA APVD ENGRG D BUTTERWORTH CHKR G.DAMON APVD
NEXT ASSY	USED ON	CONTR NAS 8-32697	APVD H.A.FORD
APPLICATION		CCA/CEI	

LOCKHEED MISSILES & SPACE COMPANY, INC.
SUNNYVALE, CALIFORNIA

TOWER ASSY, COMPLETE
STBD GRAPPLE FIXTURE

SIZE	FSCM NO.	DRAWING NO.	REV
E	06887	4171583	A
SCALE 1/2			SH 1 OF 1

4171583 A

2 EJRT FLNVD05A00205 62-32

LOCKHEED MISSILES & SPACE COMPANY, INC.
SUNNYVALE, CALIFORNIA LIAISON

IDENTITY OF THIS **ENGINEERING ORDER** AFTER RELEASE IS THE DRAWING NUMBER AND REVISION IDENTITY

PRERELEASE NO. 308157

CONTRACT NO. / DATED	DWG. TITLE: TOWER ASSY, COMPLETE	FSCM: 06887	DWG. NO.: 4171583 A 01
JOB NO.: FLM-VK05A-0089-01X	CHANGE REQ (DCR, ECP, ETC)	DWG. TO BE CHANGED ☒ YES ☐ NO	SHEET 1 OF 1 — DCN ☐ LEO ☒
PREPARED BY: S. MILLER — ORGN. NO.: 62-93 — DATE: 6/2/85	MATERIEL: [signature] — DATE: 2/8/85	MULTIPLE USAGE APPROVALS	MODEL / CHANGE EFFECTIVITY
CHECK: [signature] — DATE: 85-06-20	MFG. PLANNING: [signature] — DATE: 6/24/85		
PROJECT ENGR.: B. ALEXANDER — Per Telecon — DATE: 6/20/85	DESIGN CHANGE CONTROL — DATE		
STRESS — DATE	CUSTOMER — DATE		

REASON: ADD MORE WASHERS

RECOMMENDED DISPOSITION OF PARTS/MATLS.: ☐ USE ☐ REWORK ☐ SCRAP

DESCRIPTION OF CHANGE

ZONE: 1 2E

(IS)

2
203
204 } 4 EA REQD
202 12 REQD, 3 ON EACH BOLT

PROD NOTE - ALL PARTS SHALL CONFORM

(WAS)

2
203
204 } 4 EA REQD
202

ITEM	ZONE					PART NUMBER	DESCRIPTION	MATERIAL	MATL. SPEC.	CHANGE / DISPOSITION

FORM LMSC 8606-12

THIS PHOTOGRAPHIC IMAGE WAS PRODUCED IN ACCORDANCE WITH LMSC ENGINEERING DRAWING SERVICES STANDARD OPERATING PROCEDURES.

M-72
7-25-85
LP
158.9
5x
8.3
4.6