REVISION STATUS OF SHEETS	REV	D	D
	SHEET	1	2

REVISIONS

ZONE	REV	DESCRIPTION	DATE	APVD
7F	A	REMOVED CALLOUTS ITEMS 6.208.209;ADDED NOTE 5	89 MAY 4 89 MAY 4 89 JUN 16	Z. CHAPMAN H.A.FORD G.DAMON
4C	A01 A02 A03 B	INC LEO INC LEO INC LEO ADDED ITEM 017 UMB EMER DISCONNECT INSTLN.	84 NOV 21 84 JUN 12	MCCORD W.E.HART J.BIKULCIUS
7E 22E	C	ADDED ITEMS 18,19 & 20 CABLE CLAMP ASSY. ADDED DET C.	85 MAR 5 85 MAR 7 85 MAR 11	MCCORD H.A.FORD J.BIKULCIUS
	C01 C02 C03 C04 C05 C06 C07 D	LEO INCORP EO INCORP EO INCORP EO INCORP EO INCORP EO INCORP EO INCORP CADAM REDRAWN SHEET 2 ADDED	88 SEP 30	B.DUNCAN M.GREENFIELD B.P.PADUA

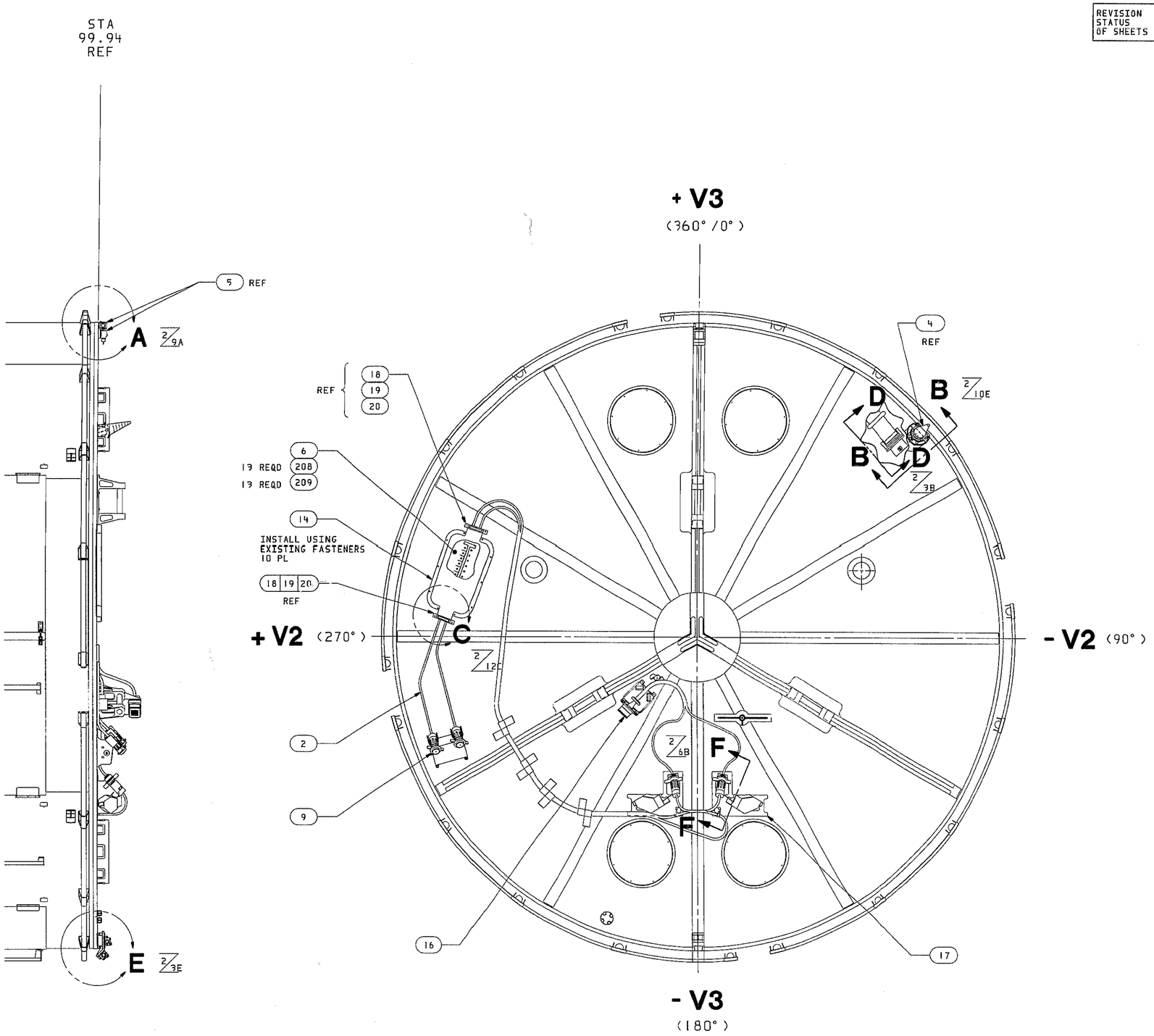

SEE PL 4171590 FOR PARTS LIST AND NOTES

LAST SECTION LETTER= F

4171684	NEXT ASSY	USED ON
APPLICATION		

UNLESS OTHERWISE SPECIFIED DIM. ARE IN INCHES. TOLERANCES ON:
FRACTIONS = ± 1/16
DECIMALS: .X = ± .1
.XX = ± .03
.XXX = ± .010
ANGLES = ± 2 DEG.

CONTR NAS8-32697
CCA/CI 4162

DATE 82-12-10
DWN L.J.CORCORAN
APVD ED LIU
APVD
ENGRG H.A.FORD
CHKR J. BIKULCIUS
APVD
APVD HENRY FORD

Lockheed Missiles & Space Company, Inc.
SUNNYVALE, CALIFORNIA

AFT SHROUD ASSY COMPLETE

SIZE	CAGE CODE	DRAWING NO.	REV
J	06887	4171590	D
SCALE 1/10			SH 1 OF 2

EJRT:FLM-VL201-0061-01X

4171590,01, D,01
4171590,01, D,02
4171590,01, D,03
J-88/A

STDLIB

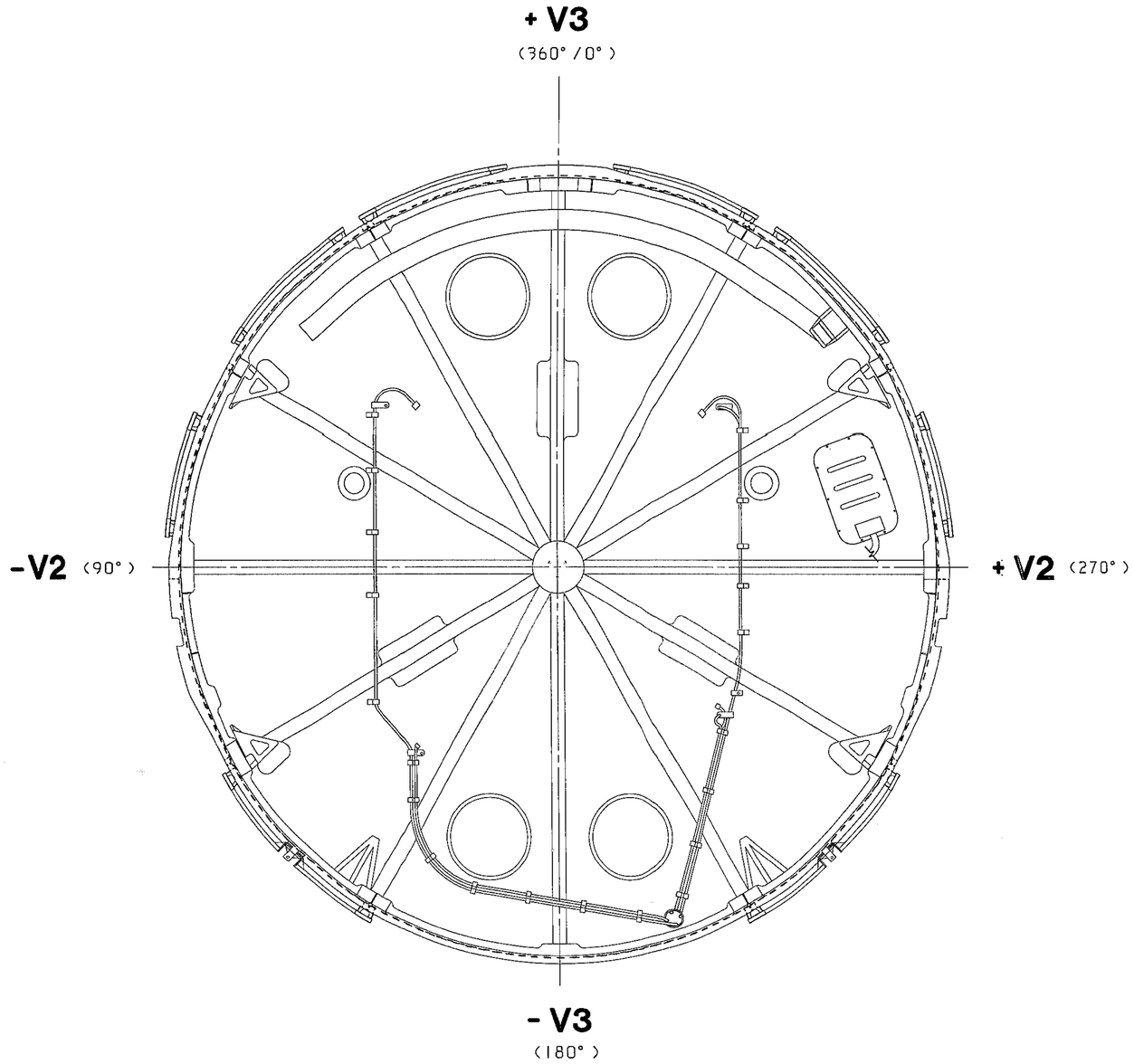

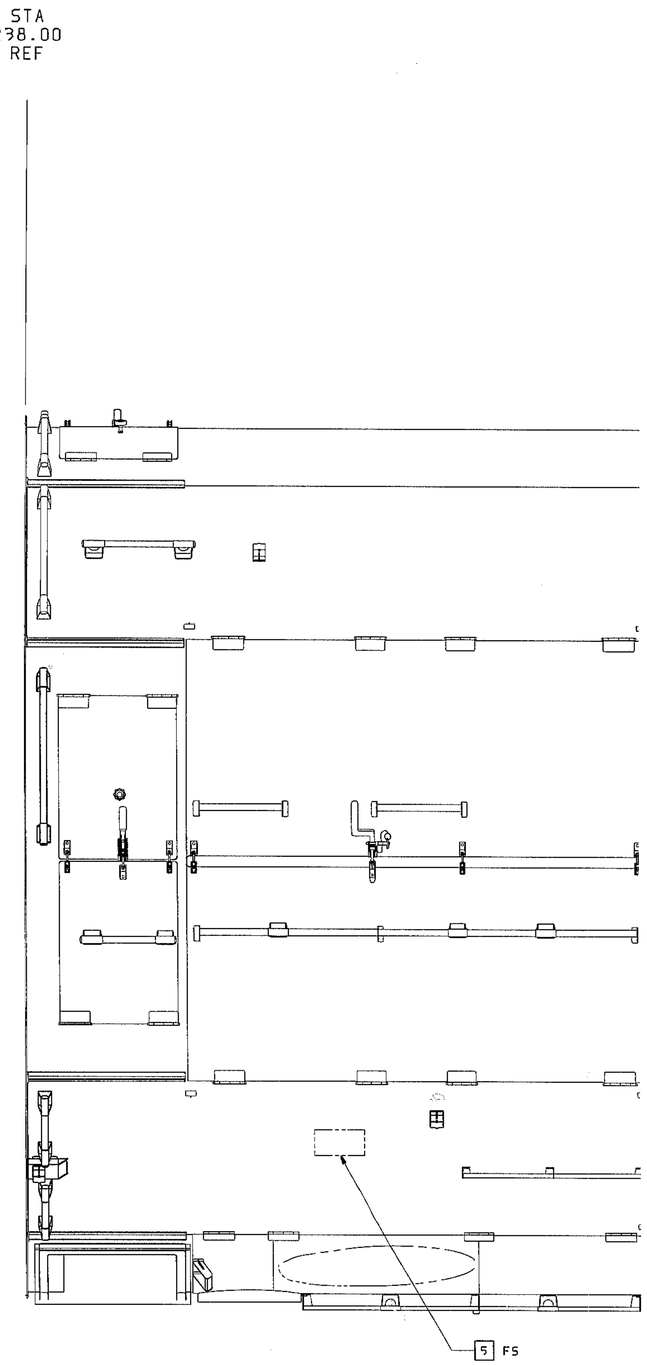

DRAWING NO	SH	REV
4171590	1	D

ST$AFT SHROUD ASSY COMPLETE, FORD

173288319

SSQB,SM7
11-15-88

REVISIONS				
ZONE	REV	DESCRIPTION	DATE	APVD
10E	C01	INCORP LEO		
3B,8G,9F	C02	INCORP EO		
2B	C03	INCORP EO		
5G,6B	C05	INCORP EO		
3F,6E	C06	INCORP EO		
9A	C07	INCORP EO		
	D	ADDED THIS SHT		

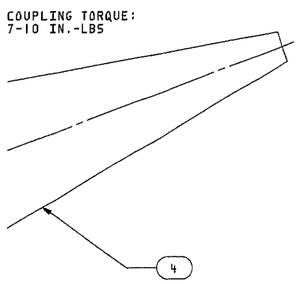

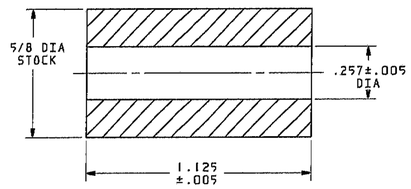

DETAIL - 001 2/3G
SCALE: 4/1

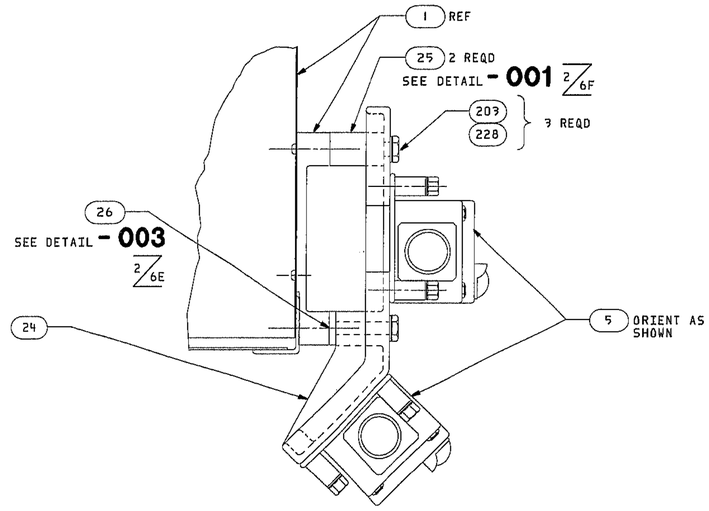

DETAIL E 1/8B
SCALE: 1/1

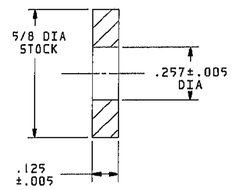

DETAIL - 003 2/5F
SCALE: 4/1

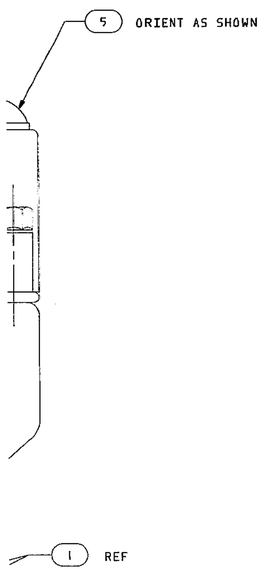

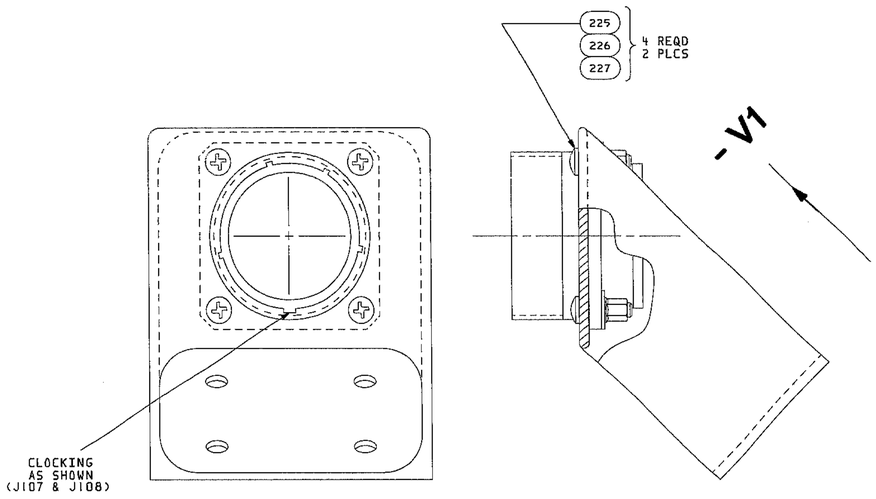

VIEW F-F 1/5D
(ROTATED 43.5° CW)
SCALE 2/1
2 PLCS

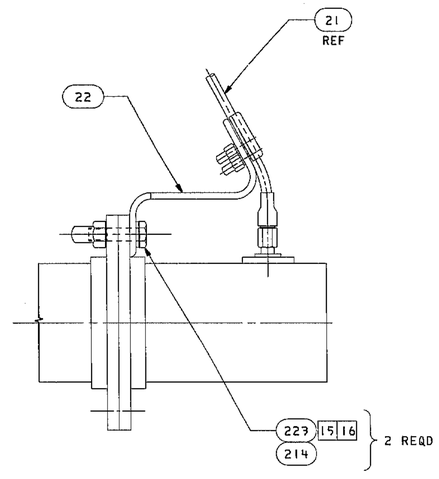

SECTION D-D 1/4E
ROTATED 40° CCW

SIZE	CAGE CODE	DRAWING NO.	REV
	J06887	4171590	D
SCALE NOTED		SHEET 2	

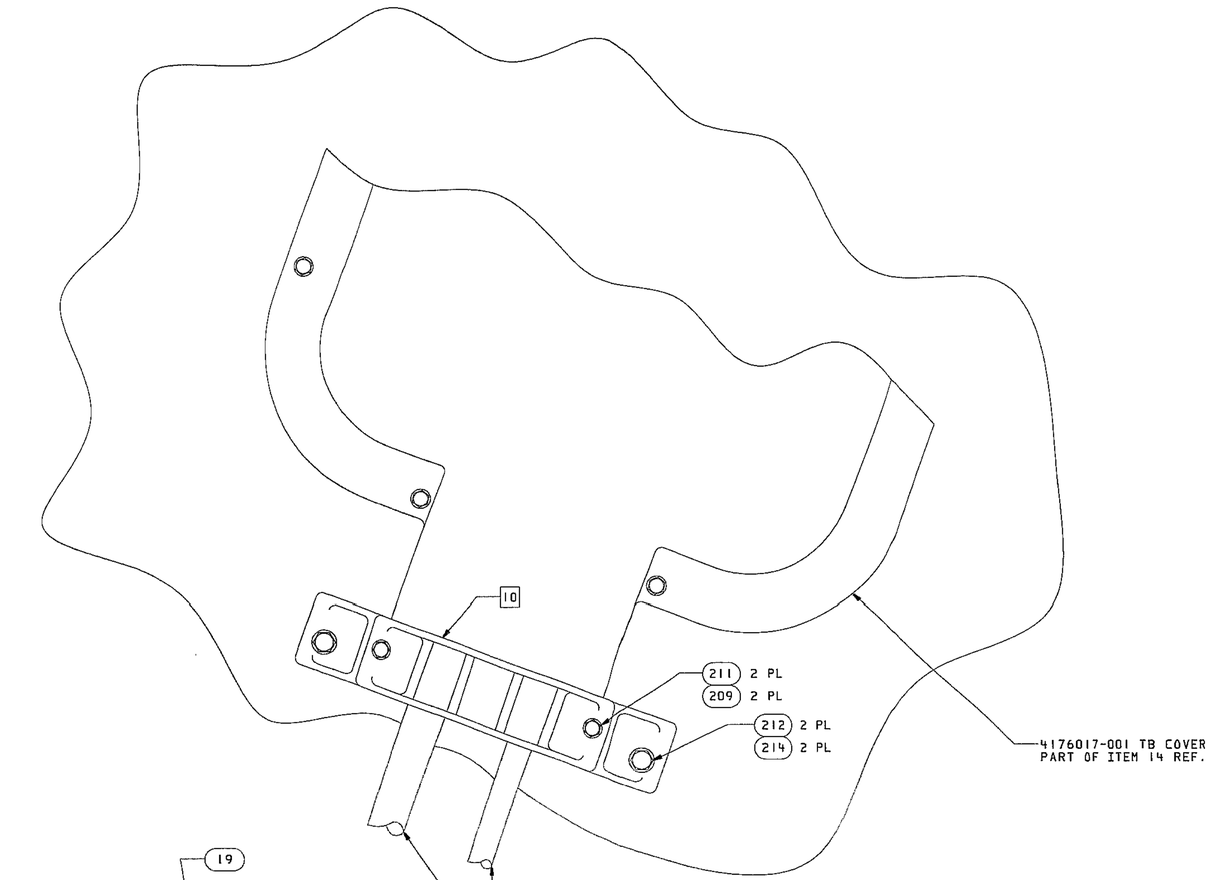

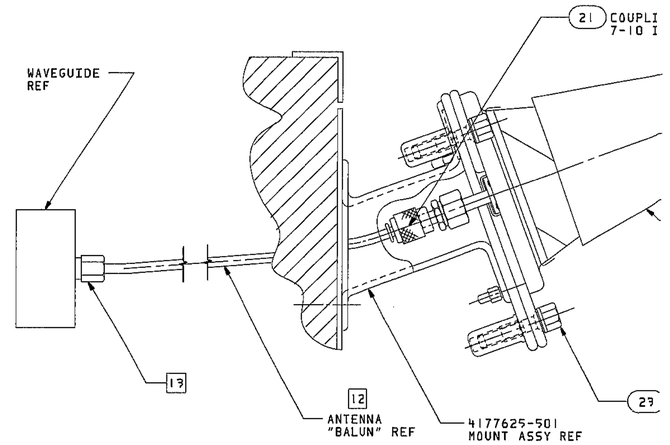

VIEW **B-B** 1/4F
ROTATED 48° CCW
SCALE: 1/1

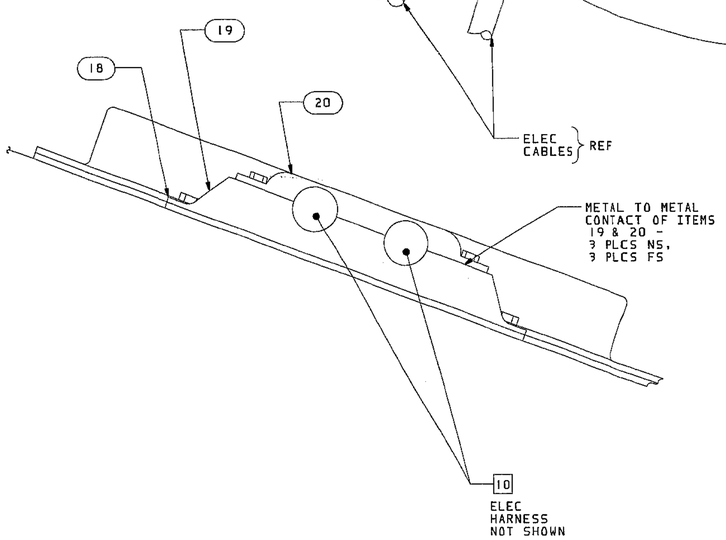

DETAIL **C** 1/6D
SCALE: 1/1
SHOWN & OPPOSITE
(2 PLACES)

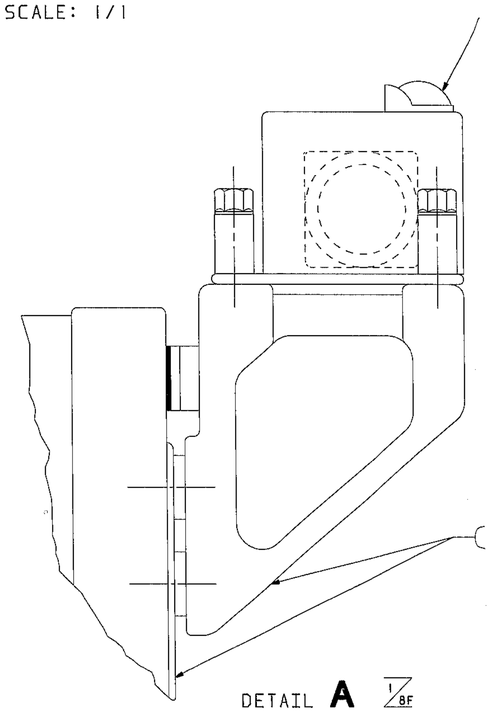

DETAIL **A** 1/8F
SCALE: 2/1

+ V3

DRAWING NO	SH	REV
4171590	2	D