REVISIONS				
ZONE	REV	DESCRIPTION	DATE	APVD
4F		ADDED ITEMS 202 THRU 207	86-09-25	SCHMIDT
6A		ADDED SECTION B-B		ALEXANDER
3B	A	ADDED VIEW C-C		BIKULCIUS

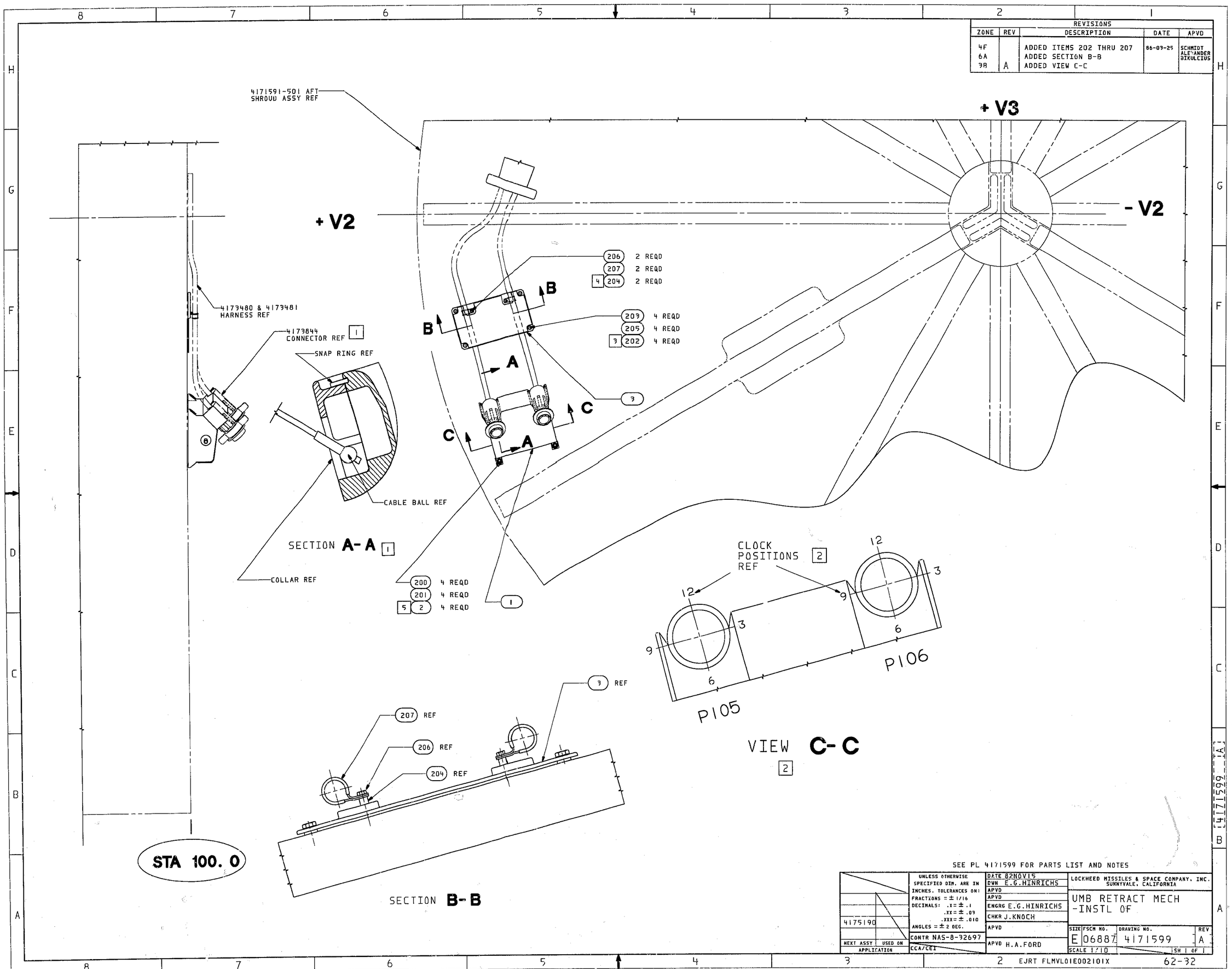

SEE PL 4171599 FOR PARTS LIST AND NOTES

4175190	UNLESS OTHERWISE SPECIFIED DIM. ARE IN INCHES. TOLERANCES ON: FRACTIONS = ± 1/16 DECIMALS: .X = ± .1 .XX = ± .03 .XXX = ± .010 ANGLES = ± 2 DEG.	DATE 82NOV15 DWN E.G.HINRICHS APVD APVD ENGRG E.G.HINRICHS CHKR J.KNOCH APVD APVD H.A.FORD	LOCKHEED MISSILES & SPACE COMPANY, INC. SUNNYVALE, CALIFORNIA
NEXT ASSY / USED ON / APPLICATION	CONTR NAS-8-32697 CCA/CEI		UMB RETRACT MECH -INSTL OF
			SIZE E FSCM NO. 06887 DRAWING NO. 4171599 REV A SCALE 1/10 SH 1 OF 1

EJRT FLMVL01E002101X 62-32