LOCKHEED MISSILES & SPACE COMPANY, INC.
SUNNYVALE, CALIFORNIA

IDENTITY OF THIS
LIAISON ENGINEERING ORDER AFTER RELEASE
IS THE DRAWING NUMBER AND REVISION LETTER

PRERELEASE NO.

DWG. NO.	REV LTR
4174146	C02
SHEET 2 OF 2	

3
5F

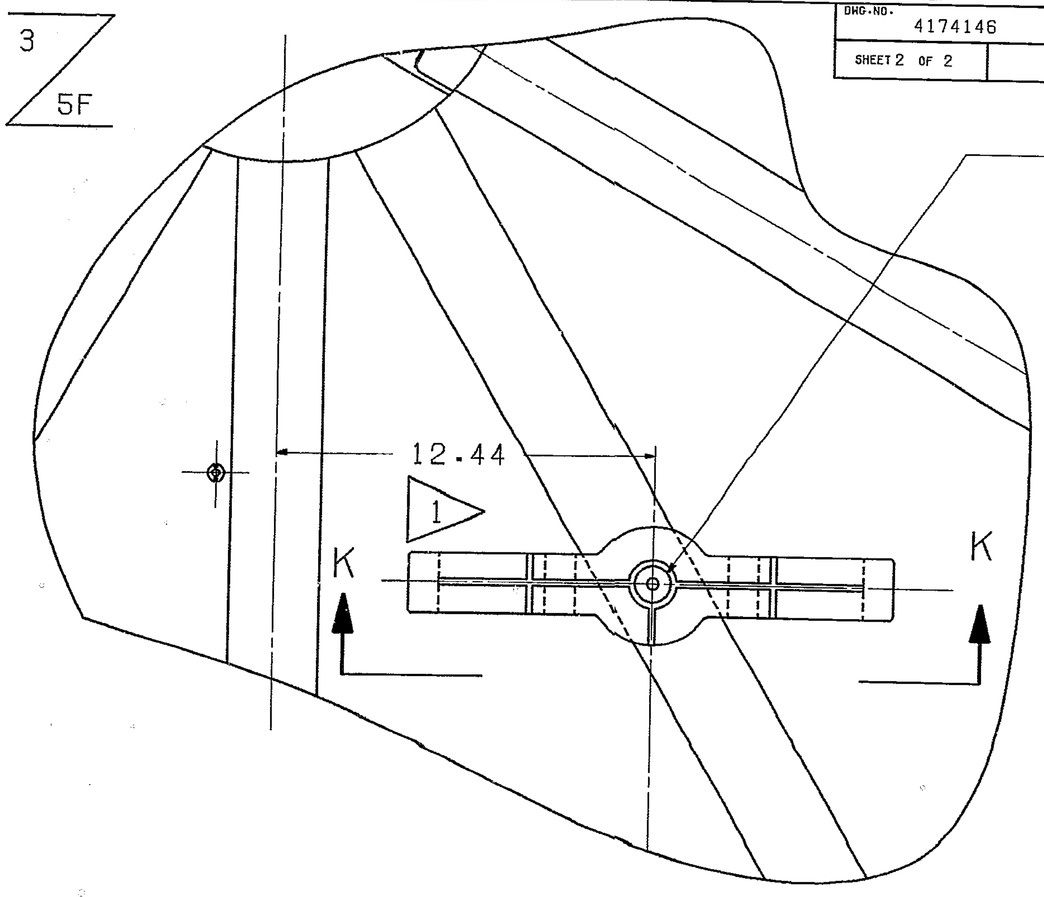

				PART NUMBER	ZONE	DESCRIPTION	MATERIAL	MATL SPEC	CHANGE	DISPOSITION

LOCKHEED
MISSILES & SPACE COMPANY
A GROUP DIVISION OF LOCKHEED AIRCRAFT CORPORATION
SUNNYVALE, CALIFORNIA

IDENTITY OF THIS
LIAISON ENGINEERING ORDER AFTER RELEASE
IS THE DRAWING NUMBER AND REVISION LETTER

PRERELEASE NO.

ECO/ECP/TI NO.	DATED	DWG TITLE		DWG NO.	REV LTR
		STRUCTURE ASSEMBLY, AFT BULKHEAD		4174146	C02
WO-EWA/RWA-JOB NO. FLM-VK201-0161-01X		STRESS	DATE	DWG. TO BE CHANGED ☒ YES ☐ NO	SHEET 1 OF 2 / DCN ☐ LEO ☒
PREPARED BY A. KOELLING 62-93	ORGN. NO. / DATE 89.07.31	MATERIAL	DATE	MULTIPLE USAGE APPROVALS	MODEL / CHANGE EFFECTIVITY
CHECK W. Bakulous	DATE 89 8 3	MFG PLANNING	DATE		
PROJECT ENGR H. GREENFIELD	DATE 89.07.31	DESIGN CHANGE CONTROL	DATE		
PRODUCTION ENGR	DATE	CUSTOMER	DATE		RECOMMENDED DISPOSITION OF PARTS/MATLS ☐ USE ☐ REWORK ☐ SCRAP

REASON
CUSTOMER DIRECTION (REF: CCB #3101)

DESCRIPTION OF CHANGE
ZONE

3
8B

(ADDED)

.143
.149 DIA THRU ITEM 47

.109
.111 DIA THRU ITEM 6.

LOCATE FROM PILOT
HOLES IN ITEM 47.

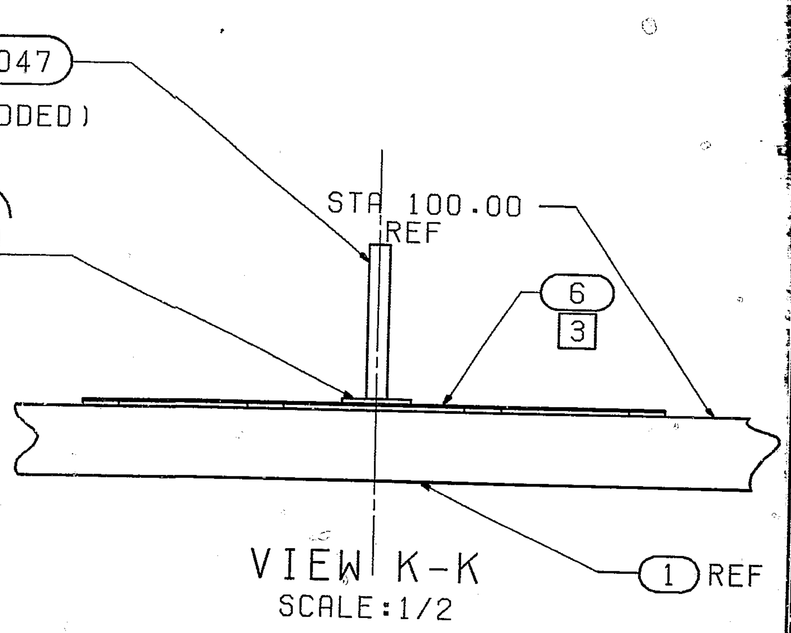

				PART NUMBER	ZONE	DESCRIPTION	MATERIAL	MATL SPEC	CHANGE	DISPOSITION

FLAM LHSC 6665-A