REVISIONS				
ZONE	LTR	DESCRIPTION	DATE	APVD

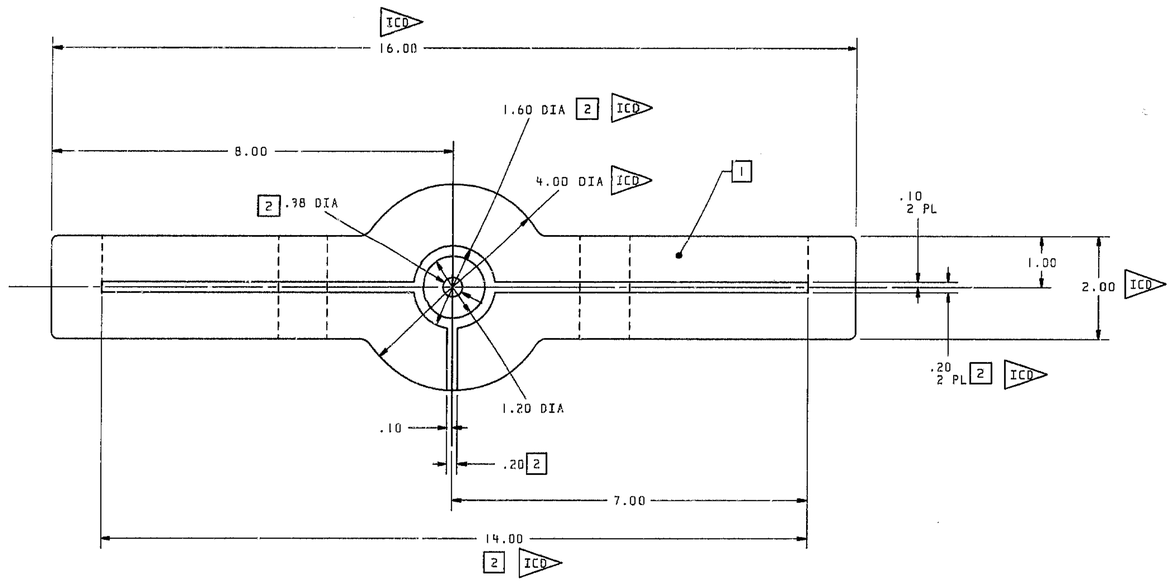

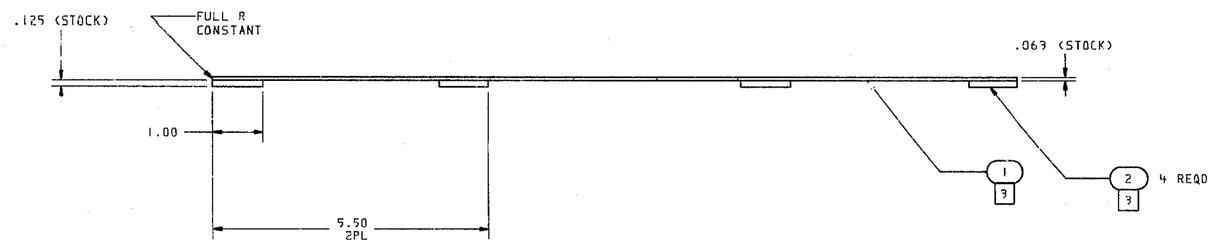

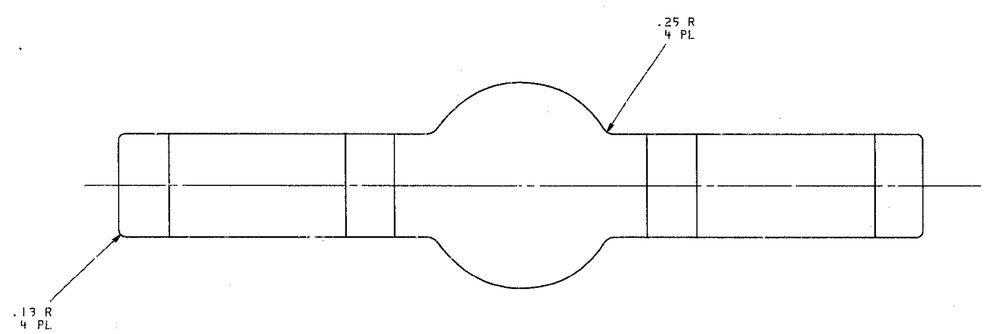

THIS DRAWING CONTAINS INFORMATION FLAGGED ▷ WHICH IS CONTROLLED BY AN INTERFACE CONTROL DOCUMENT(ICD). NO CHANGES SHALL BE MADE TO INFORMATION CONTROLLED BY AN ICD PRIOR TO INTERFACE CONTROL MANAGEMENT AUTHORIZATION. SEE ST-ICD 10 (CM08)

SEE PL4175650 FOR PARTS LIST AND NOTES

4174146	UNLESS OTHERWISE SPECIFIED DIM. ARE IN INCHES. TOLERANCES ON: FRACTIONS = ± 1/16 DECIMALS: .X = ± .1 .XX = ± .03 .XXX = ± .010 ANGLES = ± 2 DEG.	DATE 82-05-25	LOCKHEED MISSILES & SPACE COMPANY, INC. SUNNYVALE, CALIFORNIA
-501		DWN G.SANTAMARIA	BERTHING TARGET-FSS.CCTV
NEXT ASSY / USED ON		APPD H. FORD	
APPLICATION		APPD	
		ENGRG	
		CHK N.PROVAX	
	CONTR NAS 8-92697	APPD	SIZE E / CODE IDENT 06887 / DRAWING NO. 4175650 / REV
	CCA/CEI	APPD	SCALE 1/1 / SH 1 OF 1

EJRT FLMVDEJA09007 62-32