ZONE	REV	REVISIONS DESCRIPTION	DATE	APVD

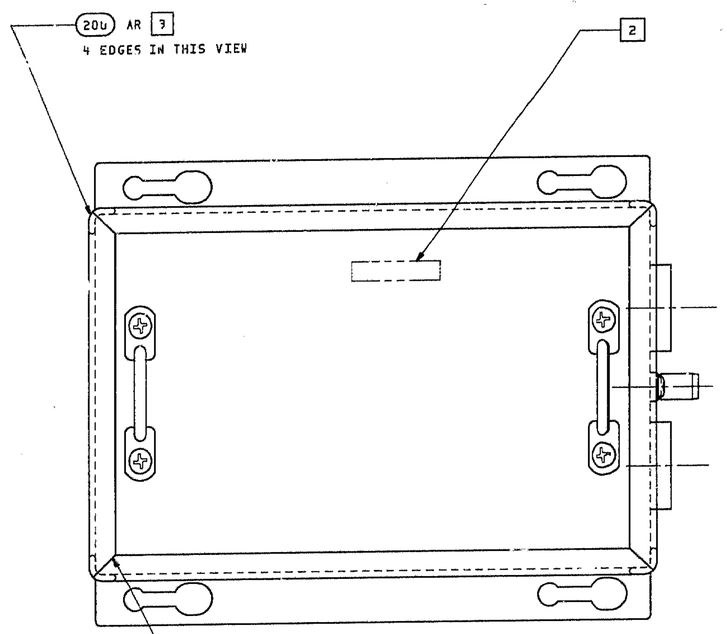

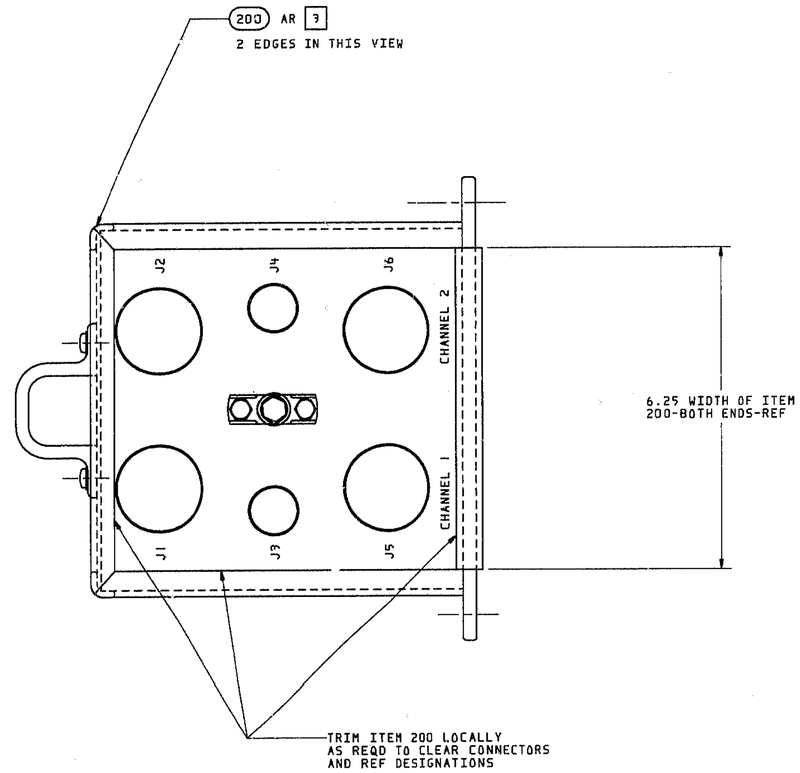

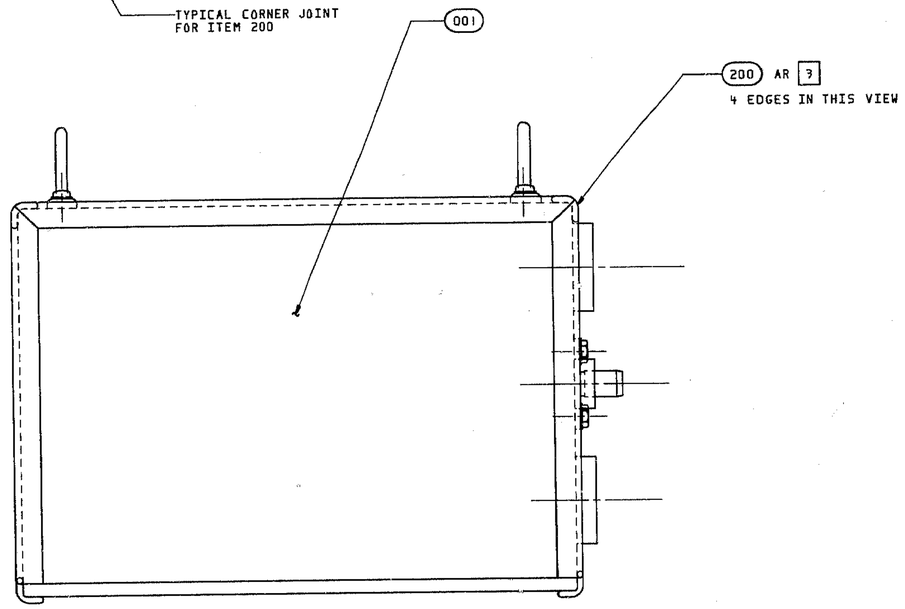

SEE PL 4176429 FOR PARTS LIST AND NOTES

4171589		UNLESS OTHERWISE SPECIFIED DIM. ARE IN INCHES. TOLERANCES ON: FRACTIONS = ± 1/16 DECIMALS: .X = ± .1 .XX = ± .03 .XXX = ± .010 ANGLES = ± 2 DEG.	DATE 10-01-84
			DWN F.W. NAVE
			APVD L.F. RESCHKE
			APVD
			ENGRG H.E. HART
			CHKR J. BIKULCIUS
		CONTR NAS-8-32697	APVD
NEXT ASSY	USED ON	CCA/CEI 5923	APVD
APPLICATION			

LOCKHEED MISSILES & SPACE COMPANY, INC.
SUNNYVALE, CALIFORNIA

ELECTRONICS
CONTROL UNIT
ORU ASSEMBLY

SIZE	FSCM NO.	DRAWING NO.	REV
E	06887	4176429	1
SCALE N/A		SH 1 OF 1	

EJRT FLMVL01D05701X 62-32