LOCKHEED — MISSILES & SPACE COMPANY
A GROUP DIVISION OF LOCKHEED AIRCRAFT CORPORATION
SUNNYVALE, CALIFORNIA

IDENTITY OF THIS
LIAISON ENGINEERING ORDER
AFTER RELEASE
IS THE DRAWING NUMBER AND REVISION LETTER

PRERELEASE NO. TMSA 149

ECO/ECP/TI NO. — DATED	DWG TITLE: SPIKE - TARGET		DWG NO. 4177006 — REV LTR 01
WO-EWA/RWA-JOB NO. FLM-VK201-0161-01X	STRESS — DATE	DWG. TO BE CHANGED ☒ YES ☐ NO	SHEET 1 OF 1 — DCN ☐ LEO ☒
PREPARED BY A. KOELLING 62-93 — ORGN. NO. — DATE 89.07.31	MATERIAL — DATE	MULTIPLE USAGE APPROVALS	MODEL — CHANGE EFFECTIVITY
CHECK W Bibulcais 62 93 — DATE 89 8	MFG. PLANNING 65 — DATE 8/9/89		
PROJECT ENGR H. GREENFIELD — DATE 89.07.31	DESIGN CHANGE CONTROL — DATE		
PRODUCTION ENGR — DATE	CUSTOMER — DATE		RECOMMENDED DISPOSITION OF PARTS/MATLS: ☐ USE ☐ REWORK ☐ SCRAP

REASON
CUSTOMER DIRECTION (REF: CCB #3101)

DESCRIPTION OF CHANGE — ZONE
CREATED -003 ASSEMBLY.

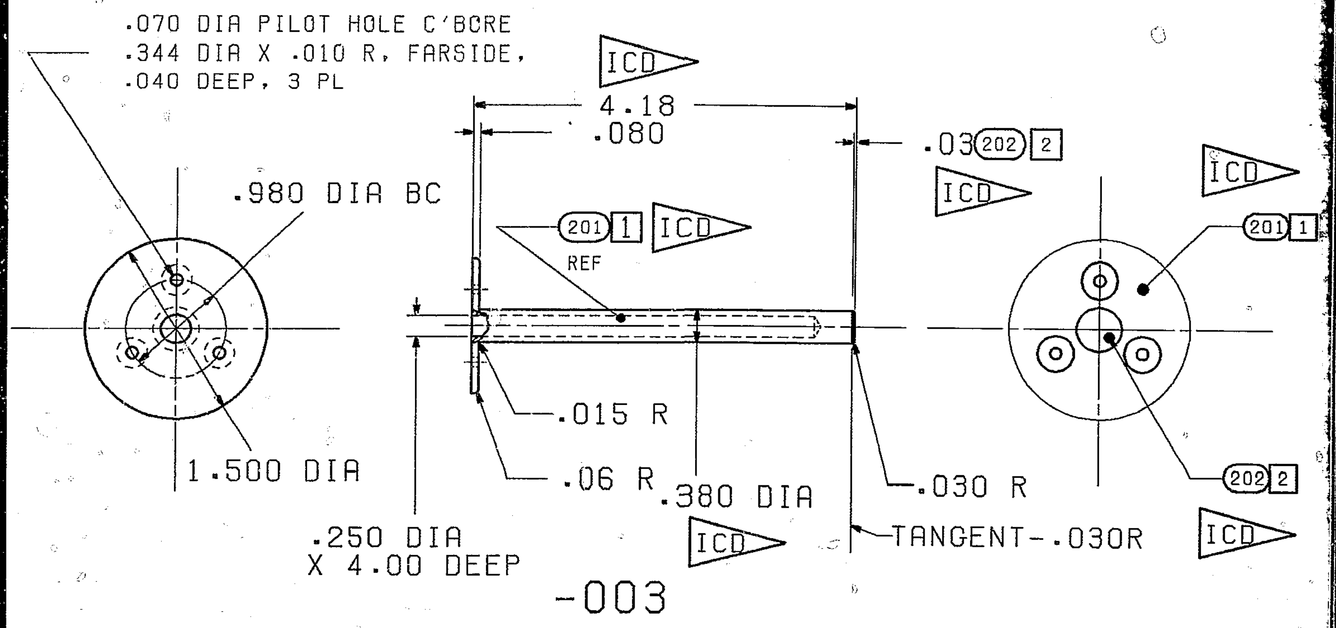

		PART NUMBER	ZONE	DESCRIPTION	MATERIAL	MATL SPEC	CHANGE	DISPOSITION

FORM LMSC 8665-8