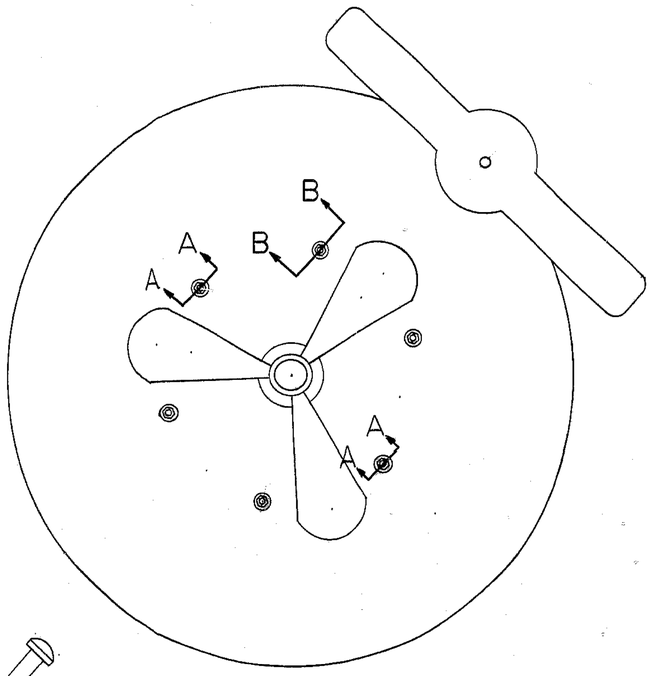

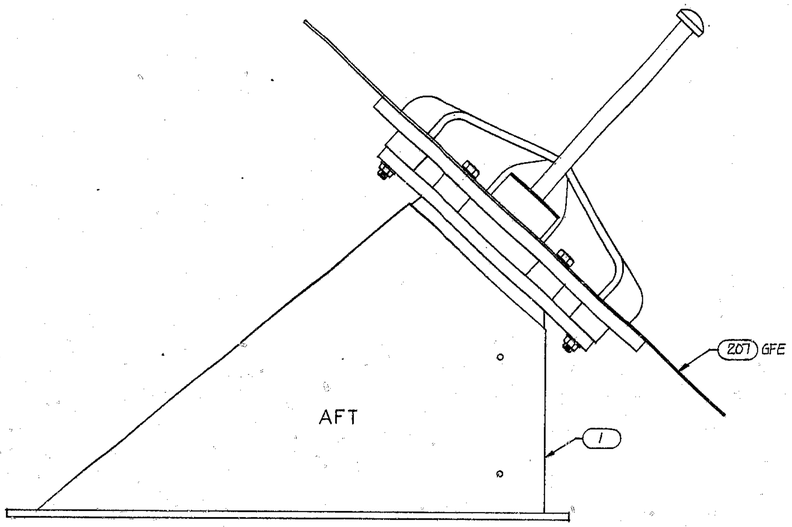

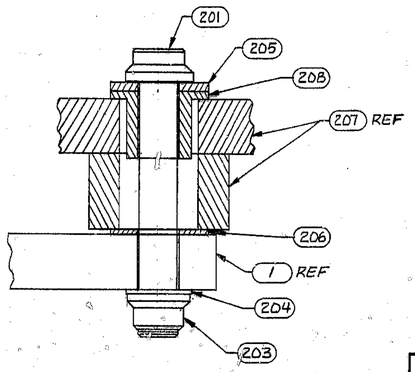

SECTION A-A 2 PLCS
ROTATED 48° CW
SCALE: 2/1

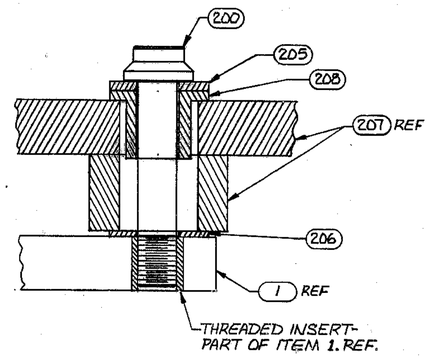

SECTION B-B 4 PLCS
ROTATED 48° CW
SCALE: 2/1

SEE PL4177051 FOR PARTS LIST & NOTES.

QTY REQD	CODE IDENT	PART OR IDENTIFYING NO	NOMENCLATURE OR DESCRIPTION	MATERIAL DESCRIPTION OR NOTE	MATERIAL SPECIFICATION	ZONE	ITEM NO

PARTS LIST

4171568		UNLESS OTHERWISE SPECIFIED DIM ARE IN INCHES. TOLERANCES ON: FRACTIONS = ± 1/16 DECIMALS: .X = ± .1 .XX = ± .03 .XXX = ± .010 ANGLES = ± 2 DEG	DATE 84-11-7 DWN M. Ford APVD T. Tam APVD Henry G. Ford ENGRG M. Ford CHKR W. Kukulcsics PK12.12
NEXT ASSY	USED ON	CONTR NAS8-32697	APVD
APPLICATION		CCA/CI/FD	APVD

LOCKHEED MISSILES & SPACE COMPANY, INC.
SUNNYVALE, CALIFORNIA

TOWER ASSY COMPL
PORT GRPL FXTR

SIZE	CODE IDENT	DRAWING NO	REV
E	06887	4177051	-

SCALE 1/2 SHEET 1 OF 1

4177051 1

THIS PHOTOGRAPHIC IMAGE WAS PRODUCED IN ACCORDANCE WITH LMSC ENGINEERING DRAWING SERVICES STANDARD OPERATING PROCEDURES.