REVISION				
SYM	ZONE	DESCRIPTION	DATE	APPROVAL
A	–	INCORPORATE REV–, EO 01	11/3/03 11/14/03 1/5/03 1/15/03 20 Feb 03 10/17/03	AMK RDR TK MJ JSCAPUT D.C.C.

NOTES:

1. THE RADIATOR COORDINATE SYSTEM ORIGINS ARE THE INTERSECTIONS OF THE NORMAL FROM THE V1 AXIS TO THE PANELS WITH THE PANEL FRONT SURFACES AND BOTTOM EDGES.

2 SAI–TM–1997 CONTAINS THE NCS RADIATOR C.G. ENVELOPE. THE ASCS RADIATOR C.G. IS TBR (EXT–1).

3 REF. LM FS&S EM 1514 FOR FRR 26 & 27 LOCATION TOLERANCES. RADIATOR LOCATIONS INCLUDE FRR 26 & 27 TOLERANCES. ANGULAR LOCATIONS AND TOLERANCES APPLY AT BOTH TOP AND BOTTOM OF RADIATORS. SEE SAI–TM–2085 FOR ACTUAL SM3B NCS RADIATOR LOCATION.

TBR LIST

TBR NO.	SHEET	DESCRIPTION	RESOLUTION
EXT–1	1	FINAL ASCS RAD CG LOC.	MASS PROP TEST–2003
~~EXT–2~~	~~1~~	~~FRR26 & 27 LOC. TOL.~~	~~LM TO VERIFY~~
EXT–3	2	FINAL ASCS COND CG LOC.	MASS PROP TEST–2003
~~EXT–4~~	~~5~~	~~P600/P601 HARNESS VOLUMES FOR MLI COVER~~	~~LM TO RESOLVE WITH SA 3 GROUP~~
~~EXT–5~~	~~6~~	~~HST RAIL SPACING~~	~~LM TO VERIFY~~
~~EXT–6~~	~~7~~	~~HR LATCH CLSED DIM~~	~~SAI TO VERIFY~~
EXT–7	7	ASCS HR LATCH RANGE	METROLOGY–2003
~~EXT–8~~	~~8~~	~~DOOR STOP ENV.~~	~~LM TO VERIFY~~
~~EXT–9~~	~~9,10~~	~~DOOR/RAD CLEARANCE~~	~~REDUCE BY FRR LOC TOL~~
~~EXT–10~~	~~9~~	~~BAY 3 DOOR/ASCS RAD CLR~~	~~PROJECT APPROVAL~~
~~EXT–11~~	~~9~~	~~FINAL BAY 3 DOOR ANGLE~~	~~LM DOOR STOP EXT. LOCATION TOLERANCE~~
~~EXT–12~~	~~9~~	~~FINAL +V2 FHST DOOR ANGLE~~	~~EVA/NBL ASSESS. 2002~~

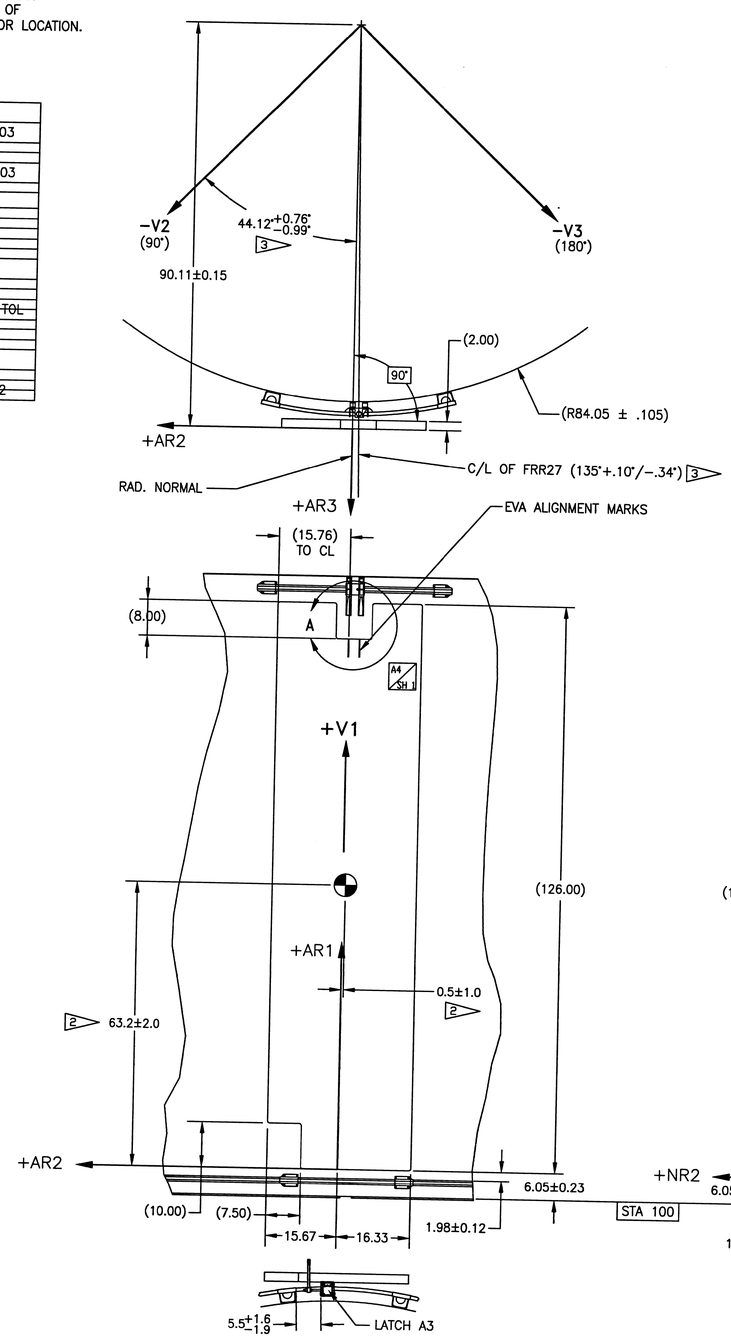

ASCS RADIATOR PANEL DESIGN LOCATION

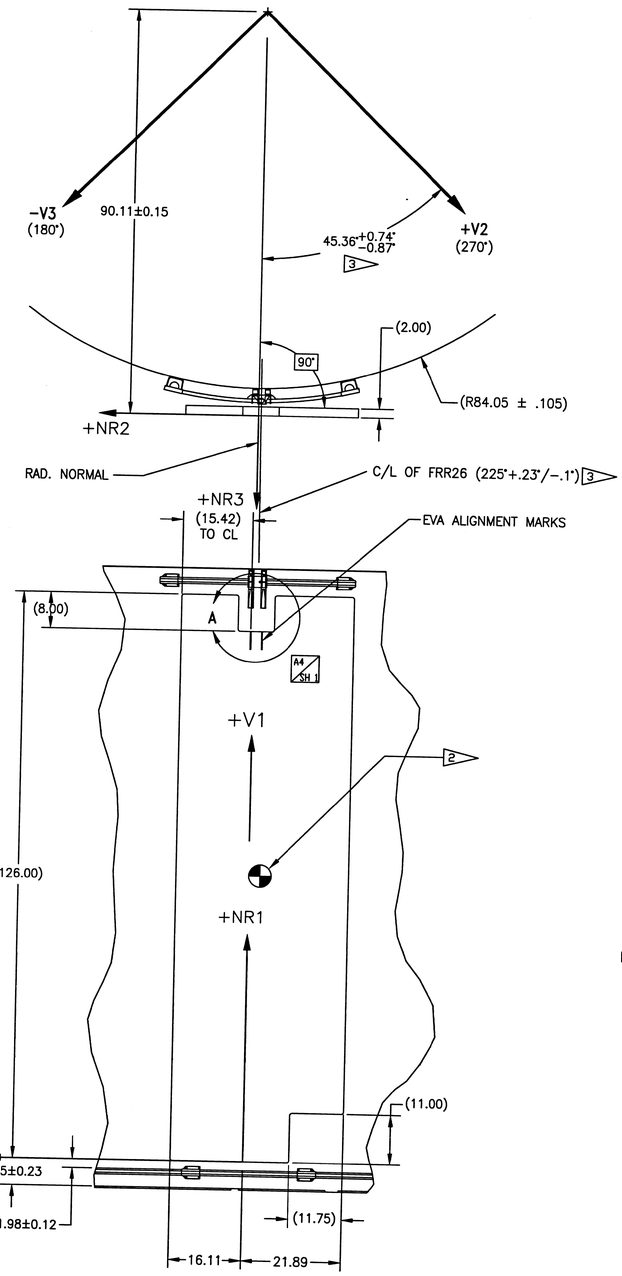

NCS RADIATOR PANEL DESIGN LOCATION

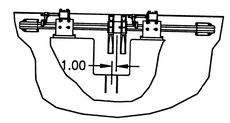

SHIFTED 1.00 LEFT

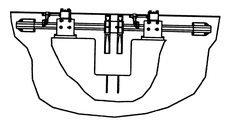

DESIGN LOCATION
ALIGNMENT MARKS CENTERED UNDER FRR26/27

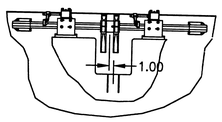

SHIFTED 1.00 RIGHT

FIGURES APPLY FOR ALL POSSIBLE FRR26/27 LOCATIONS (AS BUILT)

FIGURE 1 – ASCS/NCS RAD TO HST ALIGNMENT REQUIREMENTS

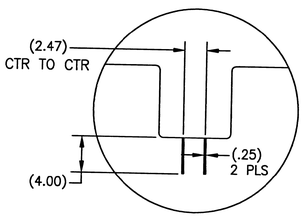

DETAIL A (2 PLS)
SCALE 2X

NAME	INIT	DATE
LM – ICD DWG REE J. GAY	JG	1/10/01
LM – METROLOGY J. COOPER	JC	1/10/01
LM – SYSTEMS K. MCAVEETY	KM	1/10/01
LM – MECHANISMS J. PELLICCIOTTI	JP	1/22/01
LM – PCS BRIAN CLAPP S. LEE FOR S. LEE	BRC	1/24/01
LM – EVA R. SHEFFIELD	RS	1/24/01
SAI HST ENGINEERING T. KELLY	TAK	1/10/01
SAI HST PROGRAM MGR. J. KUNST	JMK	1/12/01
LM HST PROGRAM MGR. J. KELLEY	JLK	1/16/01
442 MECH. SYSTEMS MGR. M. ADAMS	MA	1/27/01
442 FLT. SYSTEMS MGR. M. TURCZYN	MT	1/10/01
442 ASCS/NCS MGR. D. ZIMBELMAN	DZ	1/10/01
442 FLT. ASSURANCE MGR. R. STICKA	RAS	1/23/01

CODE 442.CM 10-11-03 RELEASED

ASCS/NCS RADIATOR PANEL LOCATIONS

ITEM NO.	REQD	REQD	PART NO.	DESCRIPTION	MATERIAL	MATERIAL SPEC & NO.

LIST OF MATERIAL

UNLESS OTHERWISE SPECIFIED–DIMENSIONS ARE IN INCHES
TOLERANCES: .XX ±.02 .XXX ±.005 ∠ ±1° FRACTIONS ±1/16 125
REMOVE ALL BURRS AND SHARP EDGES R .010 OR CHAMFER MAX.

☐ FLIGHT HARDWARE
☒ HARDNESS TEST NOT REQUIRED ☒ NON FLIGHT
☐ TEST HARDNESS PER ASTM E–18, LOCATION OPTIONAL
☐ TEST HARDNESS PER ASTM E–18 WHERE INDICATED ON FIELD OF DRAWING THUS ⊙
☒ NO NON–DESTRUCTIVE EXAMINATION (NDE) REQ'D
☐ NDE REQUIRED PER S–313–009 CODE ____

N/A	HST
NEXT ASSY	USED ON

NATIONAL AERONAUTICS AND SPACE ADMINISTRATION — Goddard Space Flight Center GREENBELT, MARYLAND

NAME	INIT	DATE
DESIGNER R. HEIDENREICH	RDH	1/10/01
DRAWN		
CHECKED		
APPROVED		
APPROVED T. COLE	TJC	01/10/01
APPROVED–STRESS		
APPROVED–ENGINEER C.SMITH	CTS	1/10/01

~~DRAWING INTERPRETED PER GSFC X673-64-1~~

TITLE
EXTERNAL MECH. I/F
HST TO ASCS/NCS

GE 1525373 REV A
CODE SCALE 1/12 WT N/A SH 1 OF 10

THIS DRAWING WAS PRODUCED USING
SOFTWARE: AutoCAD VERSION: R14
FILE NAME: 5373–1A

GE1525373

60043190

NOTES:

4 SAI-TM-1997 CONTAINS THE NCS CONDUIT C.G. ENVELOPE INCLUDING THE CPL AND HARNESSES INSIDE THE AFT SHROUD. THE ASCS CONDUIT C.G. IS TBR (EXT-3).

5 SEE GE2044727 FOR CRYOVENT I/F DETAILS.

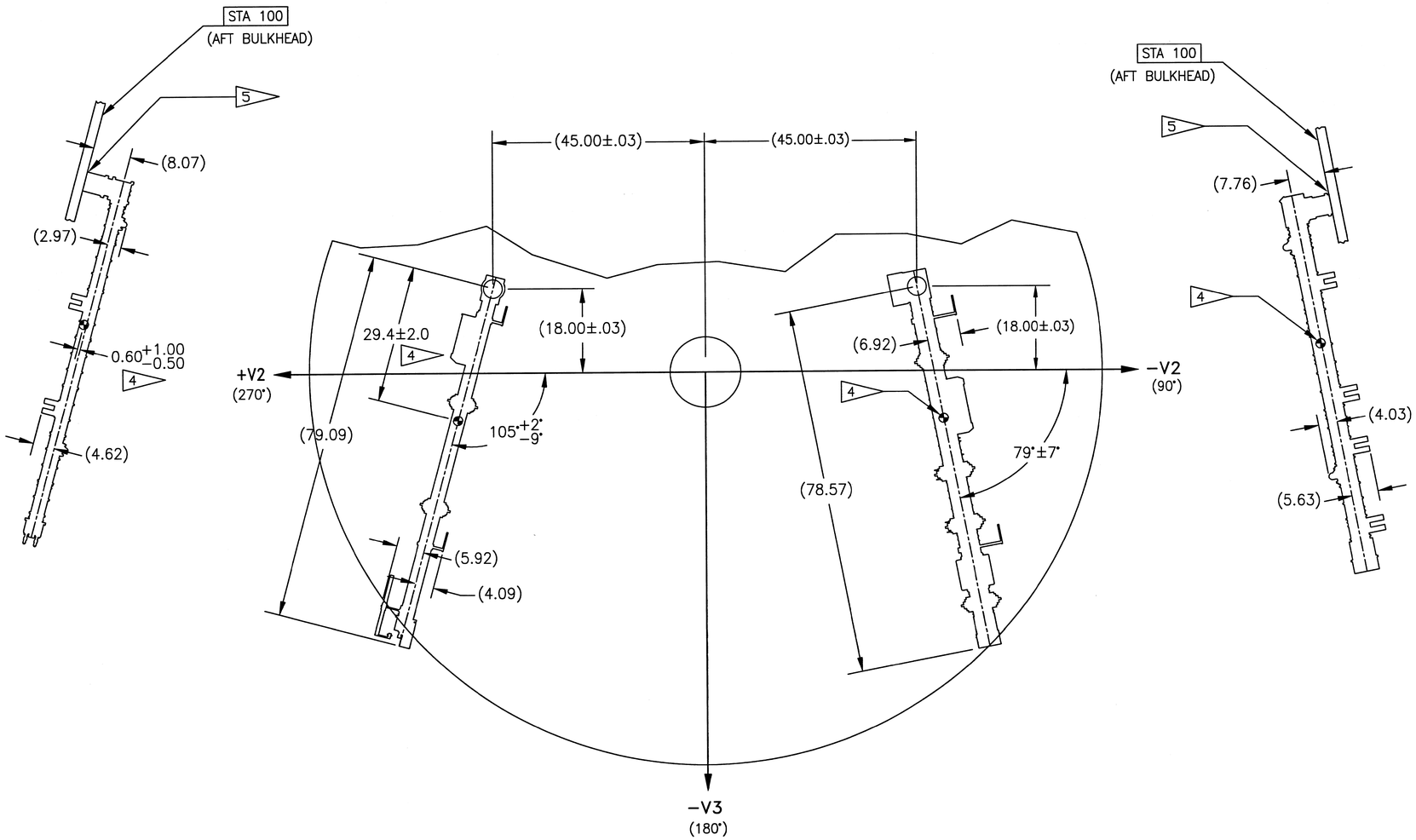

ASCS/NCS CONDUIT LOCATIONS

ITEM NO.	REQD	REQD	PART NO.	DESCRIPTION	MATERIAL	MATERIAL SPEC & NO.

LIST OF MATERIAL

UNLESS OTHERWISE SPECIFIED–DIMENSIONS ARE IN INCHES
TOLERANCES:
.XX .XXX ∠ FRACTIONS ±1/16 125
REMOVE ALL BURRS AND SHARP EDGES R .010 OR CHAMFER MAX.

☐ FLIGHT HARDWARE
☐ HARDNESS TEST NOT REQUIRED ☐ NON FLIGHT
☐ TEST HARDNESS PER ASTM E-18, LOCATION OPTIONAL
☐ TEST HARDNESS PER ASTM E-18 WHERE INDICATED ON FIELD OF DRAWING THUS ⊙
☐ NO NON-DESTRUCTIVE EXAMINATION (NDE) REQ'D
☐ NDE REQUIRED PER S-313-009 CODE

NEXT ASSY | USED ON

NATIONAL AERONAUTICS AND SPACE ADMINISTRATION Goddard Space Flight Center GREENBELT, MARYLAND

NAME	INIT	DATE
DESIGNER		
DRAWN		
CHECKED		
APPROVED		
APPROVED		
APPROVED–STRESS		
APPROVED–ENGINEER		

DRAWING INTERPRETED PER GSFC X673-64-1

TITLE
EXTERNAL MECH. I/F
HST TO ASCS/NCS

GE 1525373 REV A
CODE SCALE 1/10 WT SH 2 OF 10

THIS DRAWING WAS PRODUCED USING
SOFTWARE: AutoCAD VERSION: R14
FILE NAME: 53073-2A

GE1525373 REV A

60043191

REVISION				
SYM	ZONE	DESCRIPTION	DATE	APPROVAL

NOTES:

6. THE ENTIRE ASCS RADIATOR SURFACE IS DESIGNATED A "NO-DAMAGE" ZONE AFTER INSTALLATION ON HST. RADIATOR HANDRAILS ARE NOT TO BE USED FOR EVA TRANSLATION AFTER HST INSTALLATION.

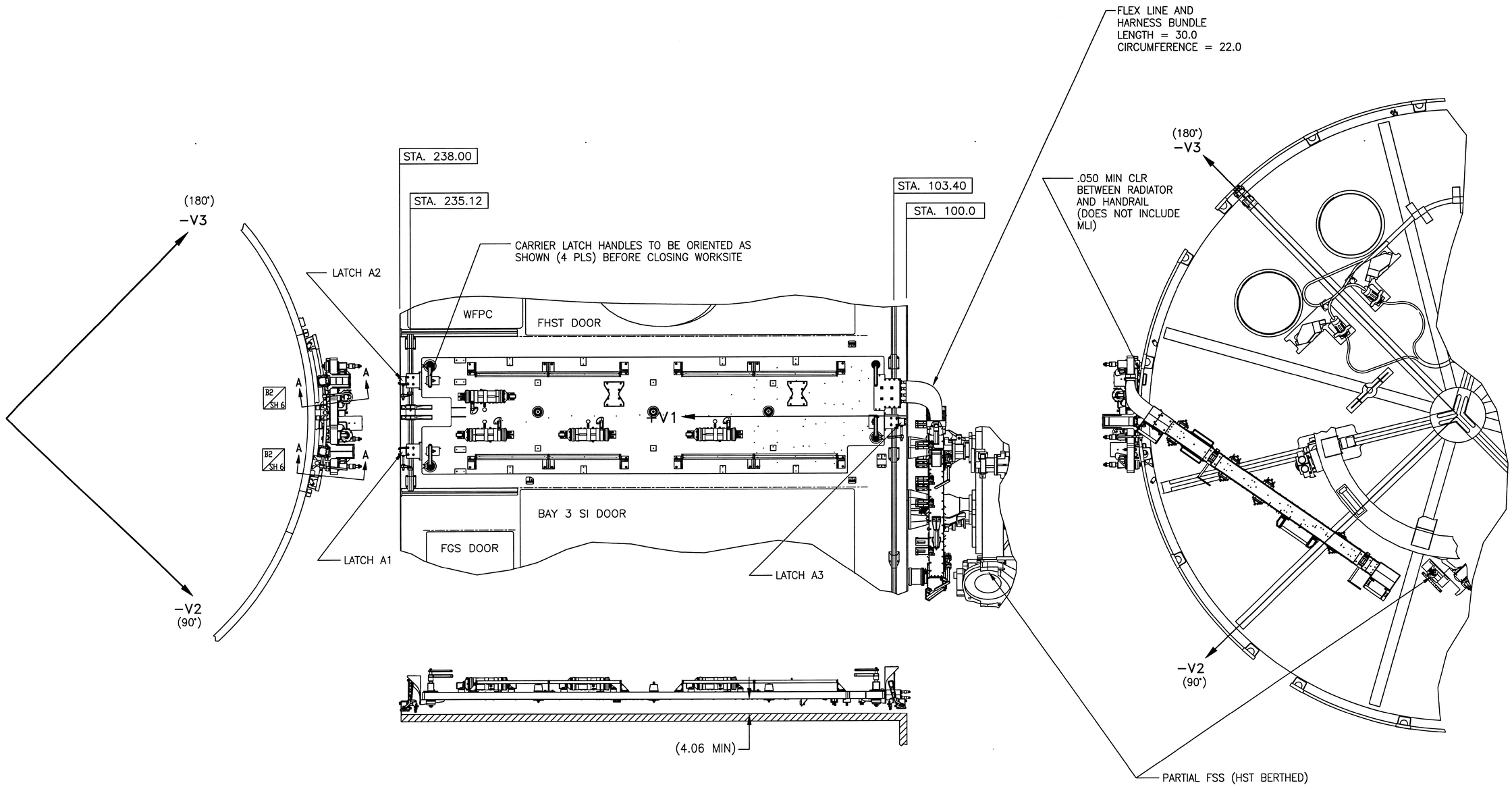

NOMINAL ASCS INSTALLATION

ITEM NO.	REQD	REQD	PART NO.	DESCRIPTION	MATERIAL	MATERIAL SPEC & NO.
				LIST OF MATERIAL		

UNLESS OTHERWISE SPECIFIED–DIMENSIONS ARE IN INCHES
TOLERANCES: .XX ±1/16 .XXX ∠ FRACTIONS 125/
REMOVE ALL BURRS AND SHARP EDGES R .010 OR CHAMFER MAX.

☐ FLIGHT HARDWARE
☐ HARDNESS TEST NOT REQUIRED ☐ NON FLIGHT
☐ TEST HARDNESS PER ASTM E-18, LOCATION OPTIONAL
☐ TEST HARDNESS PER ASTM E-18 WHERE INDICATED ON FIELD OF DRAWING THIS DR.

☐ NO NON-DESTRUCTIVE EXAMINATION (NDE) REQ'D
☐ NDE REQUIRED PER S-313-009 CODE

NEXT ASSY	USED ON

THIS DRAWING WAS PRODUCED USING
SOFTWARE: AutoCAD VERSION: R14
FILE NAME: 25373-3A

NATIONAL AERONAUTICS AND SPACE ADMINISTRATION — Goddard Space Flight Center GREENBELT, MARYLAND

	NAME	INIT	DATE
DESIGNER			
DRAWN			
CHECKED			
APPROVED			
APPROVED			
APPROVED–STRESS			
APPROVED–ENGINEER			

~~DRAWING INTERPRETED PER GSFC X673-64-1~~

TITLE
EXTERNAL MECH. I/F
HST TO ASCS/NCS

CODE			
GE	1525373		REV A
SCALE 1/10	WT	SH 3 OF 10	

GE1525373 REV A

60043192

REVISION				
SYM	ZONE	DESCRIPTION	DATE	APPROVAL

NOTES:

7. SEE SHEET 5 FOR P600 HARNESS DETAILS.
8. THE NCS CONDUIT CAN ROTATE ONLY 2.2° TO PRESERVE A 1.0 CLEARANCE TO THE BACKUP UMBILICAL CONNECTORS.
9. THE ENTIRE NCS RADIATOR SURFACE IS DESIGNATED A "NO-DAMAGE" ZONE AFTER INSTALLATION ON HST. RADIATOR HANDRAILS ARE NOT TO BE USED FOR EVA TRANSLATION AFTER HST INSTALLATION.
10. RADIATOR INSTALLATION TOLERANCES ARE SHOWN ON SHEET 1. THIS VIEW SHOWS THE POTENTIAL INTERFERENCE IF TOLERANCES ARE EXCEEDED.

RAD. TO CONDUIT HARNESS/CPL

SEGMENT	LENGTH	CIRCUM.
S1	10.5	10.5
S2	21.0	8.0
S3	10.0	6.5
S4	21.0	9.0

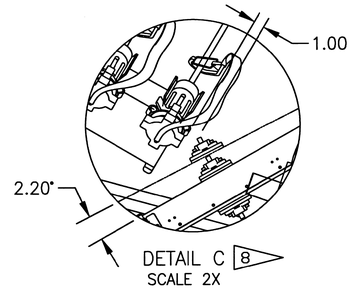

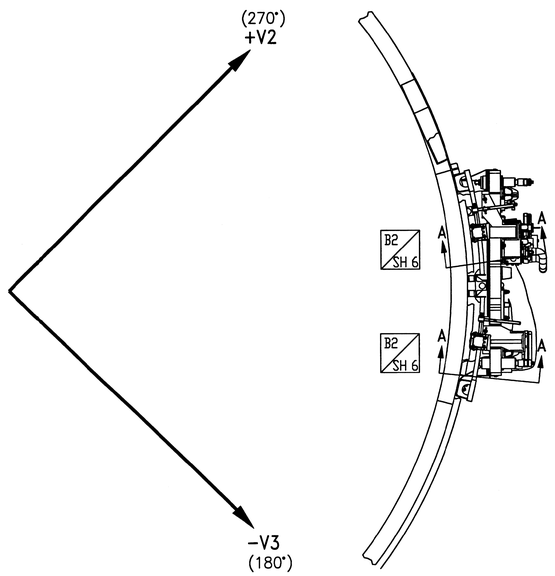

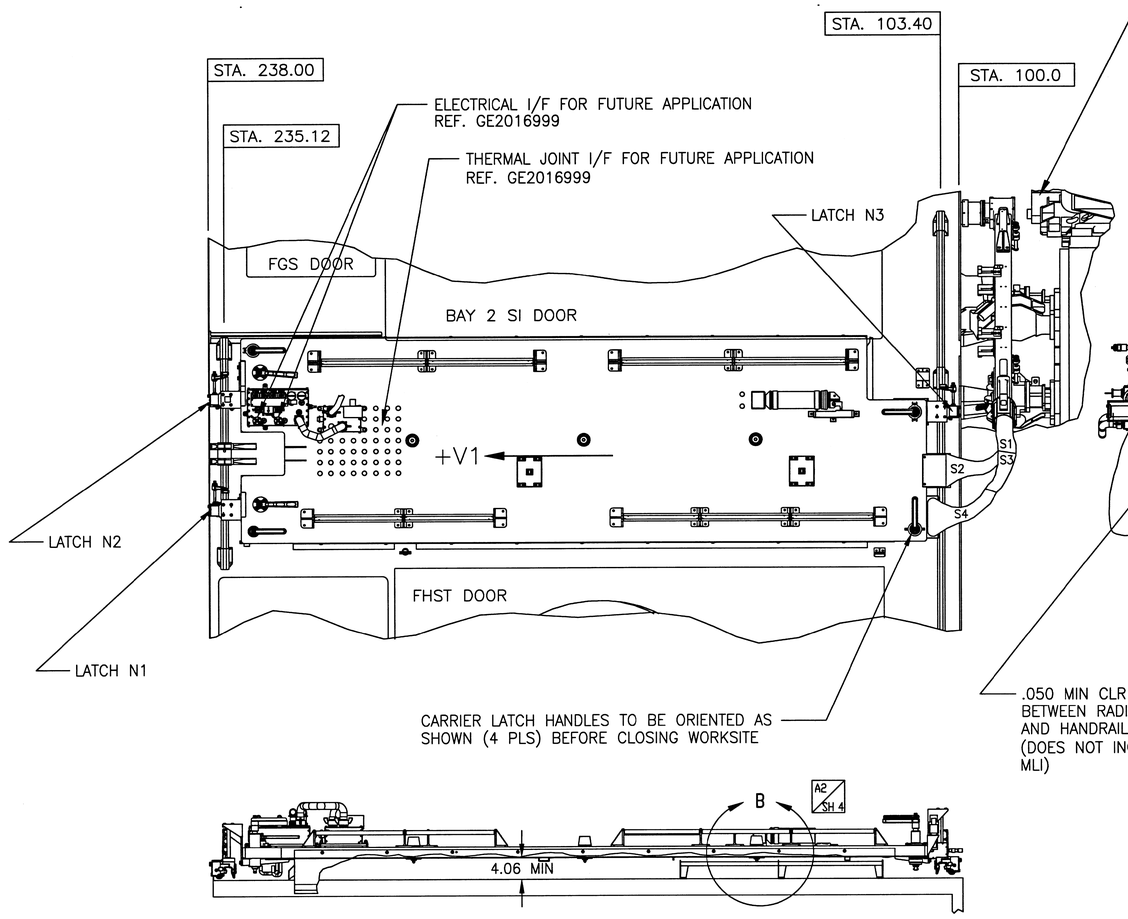

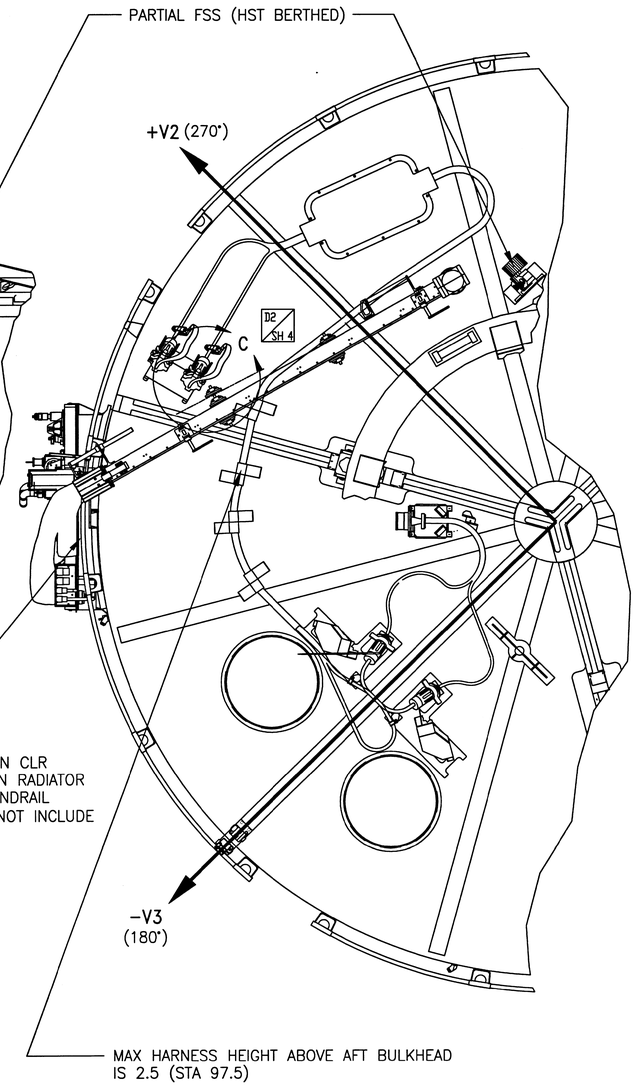

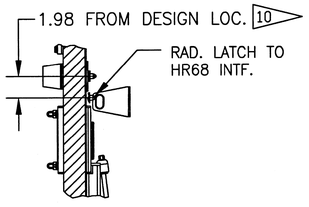

VIEW C–C
SCALE 2X

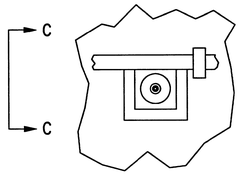

VIEW B–B
SCALE 2X
AFT SHROUD NOT SHOWN

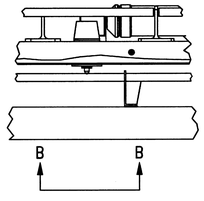

DETAIL B
SCALE 2X

NOMINAL NCS INSTALLATION

ITEM NO.	REQD	REQD	PART NO.	DESCRIPTION	MATERIAL	MATERIAL SPEC & NO.
				LIST OF MATERIAL		

UNLESS OTHERWISE SPECIFIED–DIMENSIONS ARE IN INCHES
TOLERANCES: .XX .XXX ∠ FRACTIONS ±1/16 125
REMOVE ALL BURRS AND SHARP EDGES R .010 OR CHAMFER MAX.

☐ FLIGHT HARDWARE
☐ HARDNESS TEST NOT REQUIRED ☐ NON FLIGHT
☐ TEST HARDNESS PER ASTM E-18, LOCATION OPTIONAL
☐ TEST HARDNESS PER ASTM E-18 WHERE INDICATED ON FIELD OF DRAWING THUS ⊗
☐ NO NON-DESTRUCTIVE EXAMINATION (NDE) REQ'D
☐ NDE REQUIRED PER S-313-009 CODE

NEXT ASSY | USED ON

NATIONAL AERONAUTICS AND SPACE ADMINISTRATION — Goddard Space Flight Center — GREENBELT, MARYLAND

NAME	INIT	DATE
DESIGNER		
DRAWN		
CHECKED		
APPROVED		
APPROVED		
APPROVED–STRESS		
APPROVED–ENGINEER		

~~DRAWING INTERPRETED PER GSFC-X673-64-1~~

TITLE
EXTERNAL MECH. I/F
HST TO ASCS/NCS

CODE | GE | 1525373 | REV A
SCALE 1/10 | WT | SH 4 OF 10

THIS DRAWING WAS PRODUCED USING
SOFTWARE: AutoCAD VERSION: R14
FILE NAME: 5373-4A

GE1525373

60043193

REVISION				
SYM	ZONE	DESCRIPTION	DATE	APPROVAL

NOTES:

11. HST CONNECTORS J600/J601 ARE BENDIX LJT07RE.
12. APPROX. P600 HARNESS LENGTHS ARE 17 FROM ARUBA BOX TO TETHER AND 62 FROM TETHER TO J600.

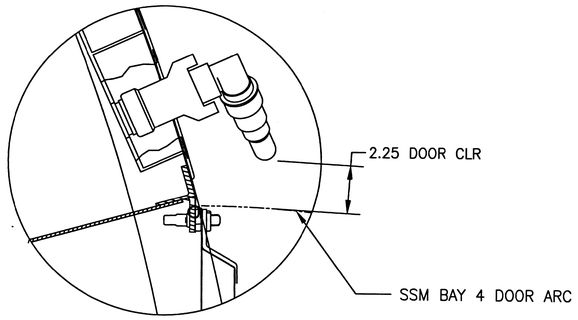

DETAIL E
SCALE 4X

FIGURE 1
MLI COVER – MIN. INTERIOR VOLUMES
P600 (NCS) AND P601 (SA3) HARNESSES
SCALE 2X

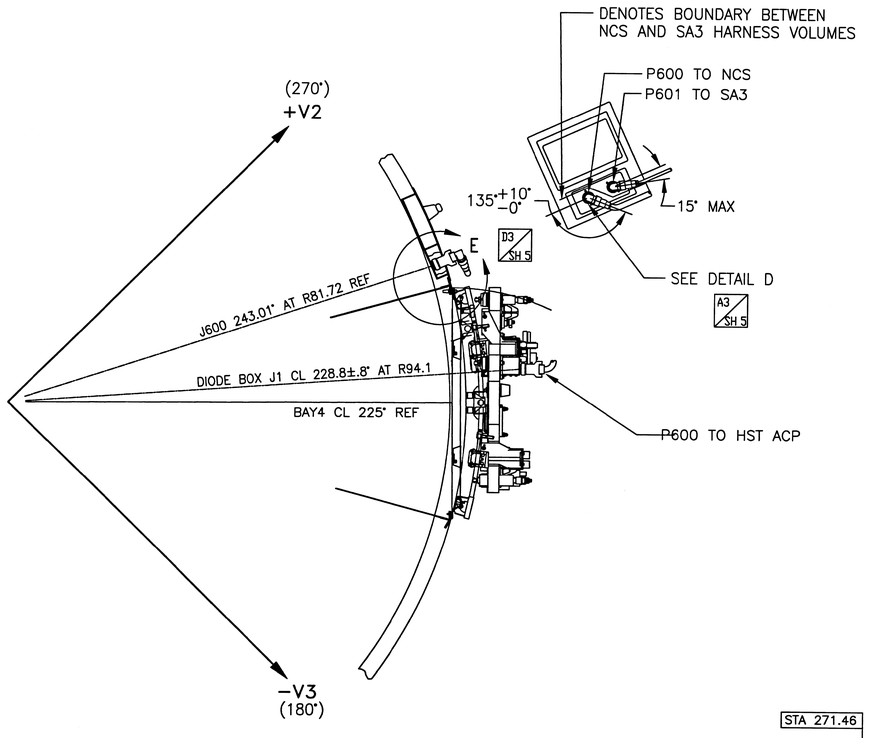

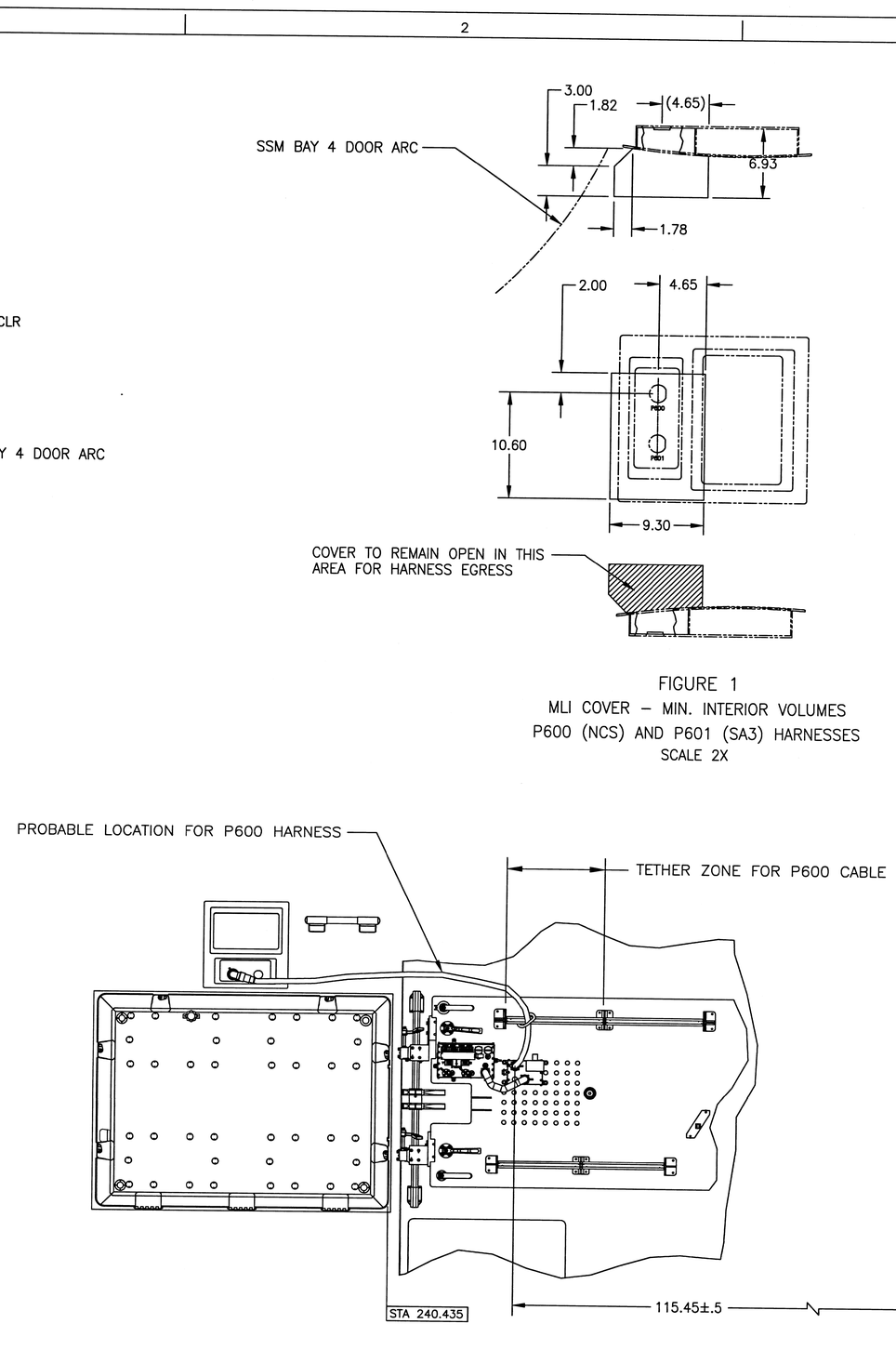

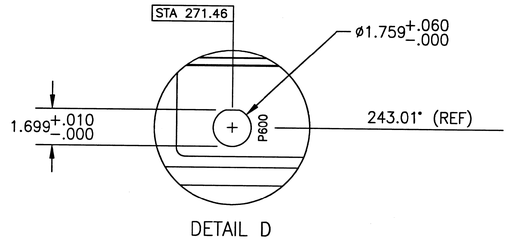

DETAIL D
ROTATED 24.28° CW
(CONN. & HARNESS NOT SHOWN FOR CLARITY)

THIS DRAWING WAS PRODUCED USING
SOFTWARE: AutoCAD VERSION: R14
FILE NAME: 25373-5A

P600 HARNESS INTERFACE DETAILS

ITEM NO.	REQD	REQD	PART NO.	DESCRIPTION	MATERIAL	MATERIAL SPEC & NO.

LIST OF MATERIAL

UNLESS OTHERWISE SPECIFIED–DIMENSIONS ARE IN INCHES
TOLERANCES: .XX .XXX ∠ FRACTIONS ±1/16 125
REMOVE ALL BURRS AND SHARP EDGES R .010 OR CHAMFER MAX.

☐ FLIGHT HARDWARE
☐ HARDNESS TEST NOT REQUIRED ☐ NON FLIGHT
☐ TEST HARDNESS PER ASTM E-18, LOCATION OPTIONAL
☐ TEST HARDNESS PER ASTM E-18 WHERE INDICATED ON FIELD OF DRAWING THUS ⊙
☐ NO NON-DESTRUCTIVE EXAMINATION (NDE) REQ'D
☐ NDE REQUIRED PER S-313-009 CODE

NEXT ASSY | USED ON

NATIONAL AERONAUTICS AND SPACE ADMINISTRATION — Goddard Space Flight Center GREENBELT, MARYLAND

	NAME	INIT	DATE
DESIGNER			
DRAWN			
CHECKED			
APPROVED			
APPROVED			
APPROVED–STRESS			
APPROVED–ENGINEER			

~~DRAWING INTERPRETED PER GSFC X673-64-1~~

TITLE
EXTERNAL MECH. I/F
HST TO ASCS/NCS

CODE GE | 1525373 | REV A
SCALE 1/10 | WT | SH 5 OF 10

GE1525373 REV A

60043194

NOTES:

13 HANDRAIL TOP COAT IS POLYURETHANE PER LAC37-4462-0400 (YELLOW).

13.1 EXTENSION OF HAND RAIL CLAMPING RANGE DUE TO ACTUAL INSTALLED LOCATION OF NCS RADIATOR DURING SM3B (REF. SAT-TM-2085).

	HST CONDITION		
DIM.	AS BUILT	DURING SERVICING MISSION	ON-ORBIT
A	131.72 ±.39	131.476 ±.40	131.580 ±.444

REF.: SAI-TM-1476, 14 JUN 99.

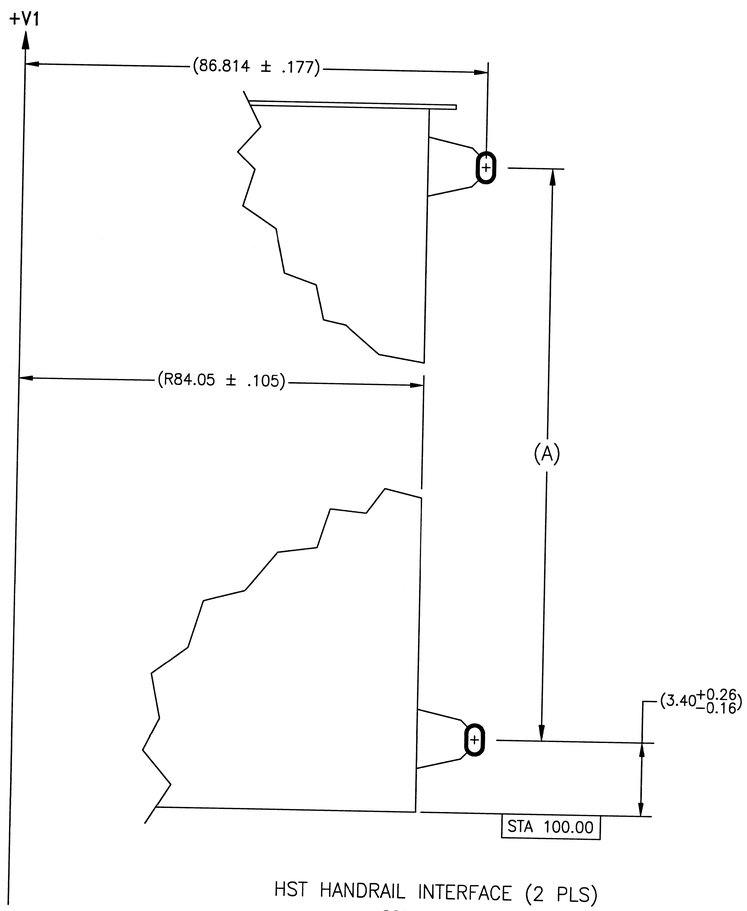

HST HANDRAIL INTERFACE (2 PLS)
SCALE 4X

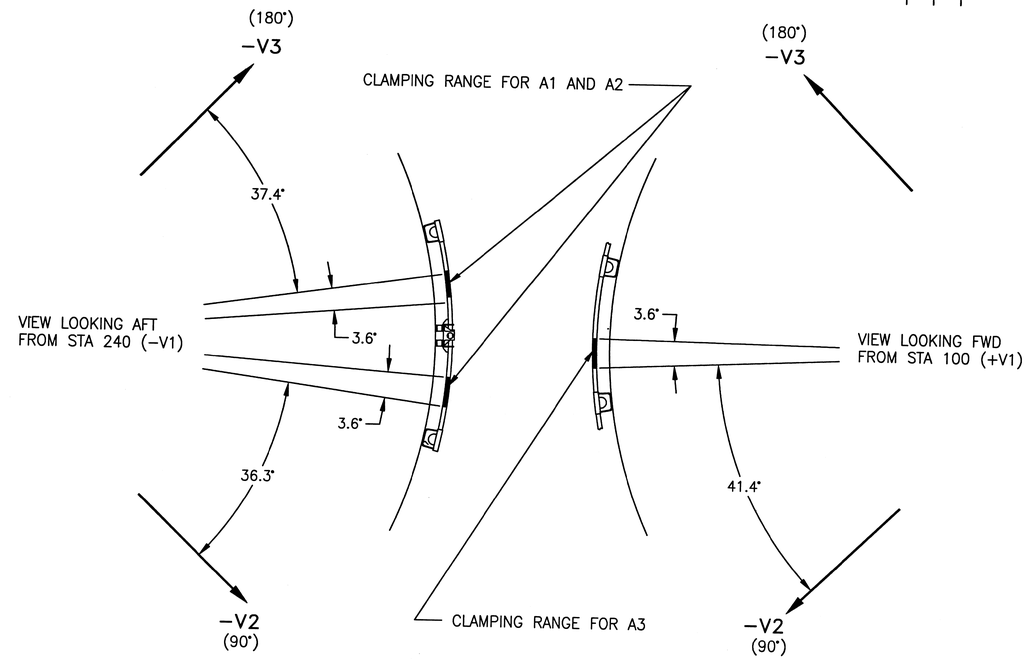

ASCS RADIATOR LATCH CLAMPING LOCATIONS ON HST HANDRAILS

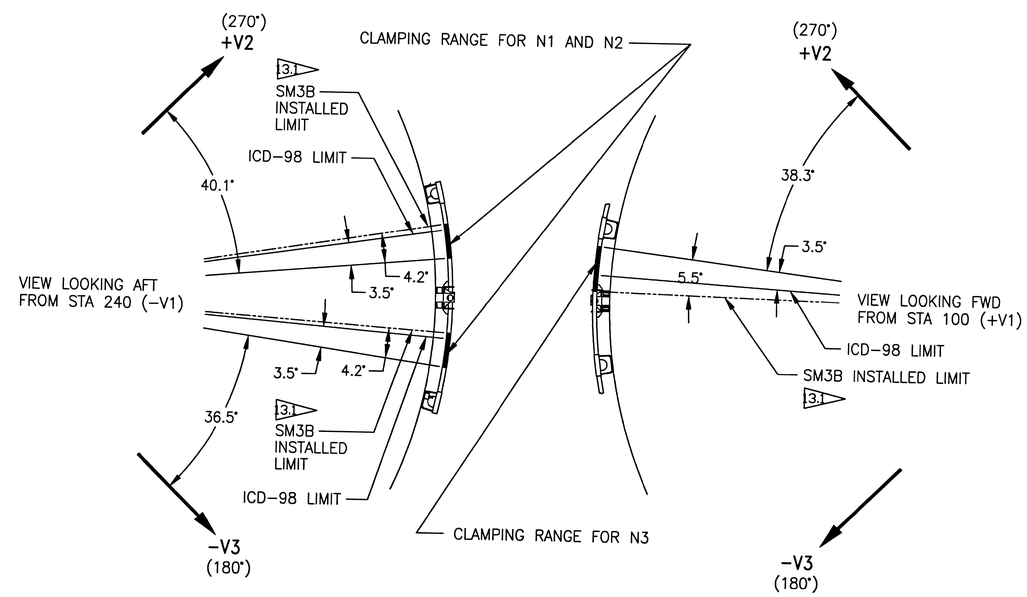

NCS RADIATOR LATCH CLAMPING LOCATIONS ON HST HANDRAILS

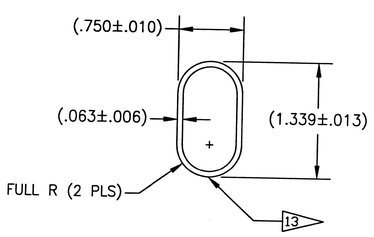

HANDRAIL DIMENSIONS
SCALE 16X
REF: LMTO DWG SA 7-107-1

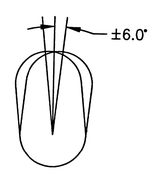

HANDRAIL ROTATIONAL TOLERANCE
SCALE 16X

REVISION				
SYM	ZONE	DESCRIPTION	DATE	APPROVAL

THIS DRAWING WAS PRODUCED USING
SOFTWARE: AutoCAD VERSION: R14
FILE NAME: 373-6A

ITEM NO.	REQD	REQD	PART NO.	DESCRIPTION	MATERIAL	MATERIAL SPEC & NO.
				LIST OF MATERIAL		

UNLESS OTHERWISE SPECIFIED–DIMENSIONS ARE IN INCHES
TOLERANCES: .XX ±.01 .XXX ±.005 ∠ FRACTIONS ±1/16 125/
REMOVE ALL BURRS AND SHARP EDGES R .010 OR CHAMFER MAX.

☐ FLIGHT HARDWARE
☐ HARDNESS TEST NOT REQUIRED ☐ NON FLIGHT
☐ TEST HARDNESS PER ASTM E-18, LOCATION OPTIONAL
☐ TEST HARDNESS PER ASTM E-18 WHERE INDICATED ON FIELD OF DRAWING THUS ⊗.
☐ NO NON-DESTRUCTIVE EXAMINATION (NDE) REQ'D
☐ NDE REQUIRED PER S-313-009 CODE

NEXT ASSY | USED ON

NATIONAL AERONAUTICS AND SPACE ADMINISTRATION — Goddard Space Flight Center GREENBELT, MARYLAND

	NAME	INIT	DATE
DESIGNER			
DRAWN			
CHECKED			
APPROVED			
APPROVED			
APPROVED–STRESS			
APPROVED–ENGINEER			

DRAWING INTERPRETED PER GSFC X673-64-1

TITLE
HST HANDRAIL INTERFACES
EXTERNAL MECH. I/F
HST TO ASCS/NCS

GE 1525373 REV A
CODE | SCALE 1/10 | WT | SH 6 OF 10

GE1525373 REV A

60043195

REVISION				
SYM	ZONE	DESCRIPTION	DATE	APPROVAL

NOTES:

10 SHEAR TIE ADJUSTMENT PRIOR TO HST INSTALLATION.
REF. A16-ST-2033 FOR NCS DIMENSIONS.
ASCS DIMENSIONS ARE TBR (EXT-6) UNTIL VERIFIED BY METROLOGY.

10.1 A1, A2, AND A3 ARE REQUIRED TO ACCOMMODATE HANDRAIL TWIST OF ±6.0° WRT THE PLANE OF THE RADIATOR. REF. SAI-RPT-502.

10.2 LATCH OPEN/CLOSED DIMENSIONS MAY ALSO BE VERIFIED BY USING THE MAX/MIN HAND RAILS AS A GO/NO GO GAUGE.

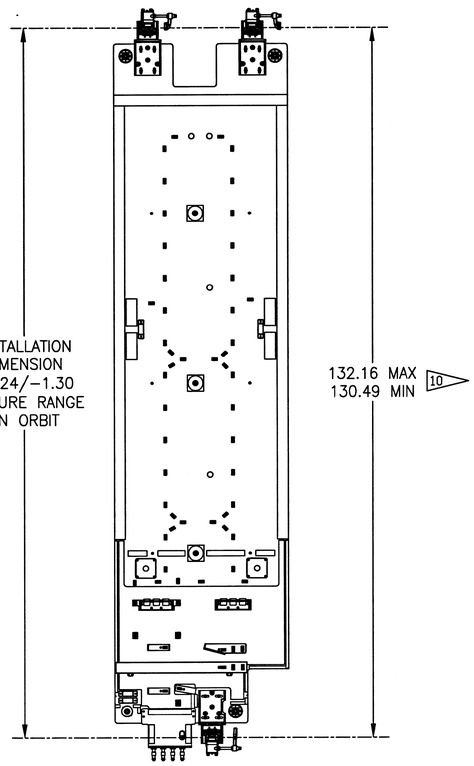

ASCS RADIATOR

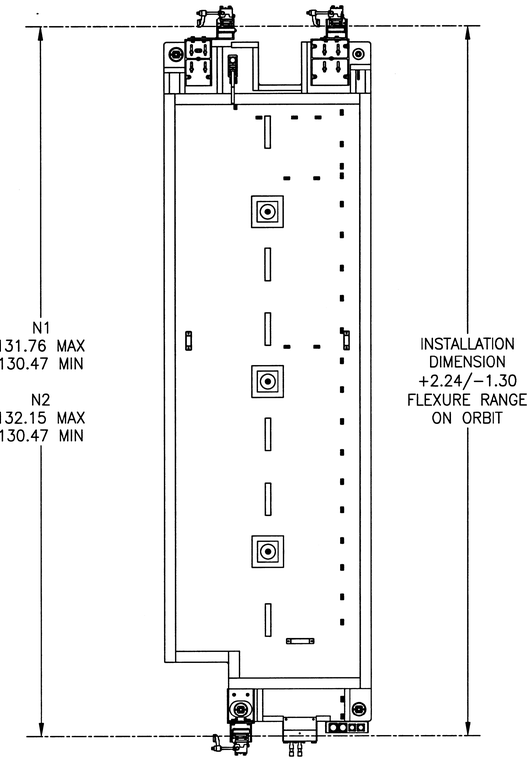

NCS RADIATOR

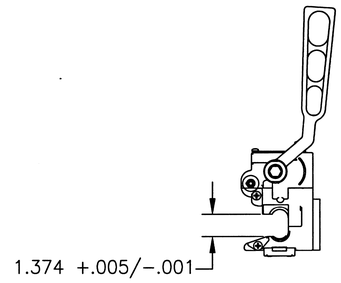

LATCH OPEN
SCALE 4X
10.2

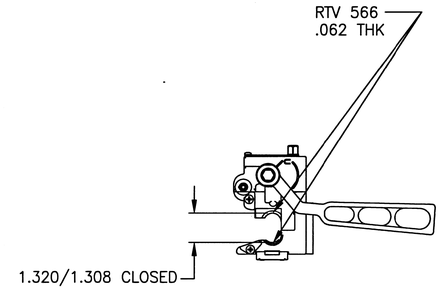

LATCH CLOSED
SCALE 4X
10.2

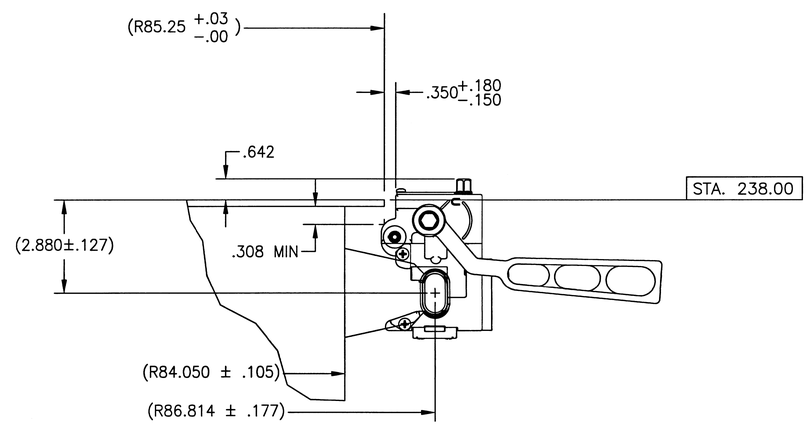

VIEW A-A
RADIATOR PANEL NOT SHOWM
SCALE 6X
AFT SHROUD CLEARANCE TO LATCHES A1, A2, N1, & N2

MAX REQUIRED LATCH ADJUSTMENT WITH RESPECT TO N1 (REF. SAI-TM-1492)

	LINEAR (IN.)			ROTATIONAL (DEGREES)		
	TANGENTIAL	RADIAL	AXIAL	TANGENTIAL	RADIAL	AXIAL
N2	0.035	0.319	0.431	1.35	0.75	0.78
	-0.078	-0.242	-0.432	-1.26	-0.78	-1.01
TOTAL	0.113	0.561	0.863	2.60	1.54	1.79
N3	1.772	3.250	0.551	1.45	1.24	1.18
	-1.915	-2.895	-0.431	-1.17	-0.94	-1.20
TOTAL	3.687	6.145	0.982	2.62	2.18	2.37

MAX REQUIRED LATCH ADJUSTMENT WITH RESPECT TO A1 (PARTIAL REF. SAI-TM-1492)

	LINEAR (IN.)			ROTATIONAL (DEGREES)		
	TANGENTIAL	RADIAL	AXIAL	TANGENTIAL	RADIAL	AXIAL
A2	0.035	0.319	0.431		0.75	0.78
	-0.078	-0.242	-0.432		-0.78	-1.01
TOTAL	0.113	0.561	0.863	10.1	1.54	1.79
A3	1.772	3.250	0.551		1.24	1.18
	-1.915	-2.895	-0.431		-0.94	-1.20
TOTAL	3.687	6.145	0.982	10.1	2.18	2.37

THIS DRAWING WAS PRODUCED USING
SOFTWARE: AutoCAD VERSION: R14
FILE NAME: 373-7A

ITEM NO.	REQD	REQD	PART NO.	DESCRIPTION	MATERIAL	MATERIAL SPEC & NO.
				LIST OF MATERIAL		

UNLESS OTHERWISE SPECIFIED-DIMENSIONS ARE IN INCHES
TOLERANCES: .XX .XXX ∠ FRACTIONS ±1/16 125
REMOVE ALL BURRS AND SHARP EDGES R .010 OR CHAMFER MAX.

☐ FLIGHT HARDWARE
☐ HARDNESS TEST NOT REQUIRED ☐ NON FLIGHT
☐ TEST HARDNESS PER ASTM E-18, LOCATION OPTIONAL
☐ TEST HARDNESS PER ASTM E-18 WHERE INDICATED ON FIELD OF DRAWING THUS ⊗
☐ NO NON-DESTRUCTIVE EXAMINATION (NDE) REQ'D
☐ NDE REQUIRED PER S-313-009 CODE

NEXT ASSY | USED ON

NATIONAL AERONAUTICS AND SPACE ADMINISTRATION — Goddard Space Flight Center GREENBELT, MARYLAND

NAME	INIT	DATE
DESIGNER		
DRAWN		
CHECKED		
APPROVED		
APPROVED		
APPROVED-STRESS		
APPROVED-ENGINEER		

~~DRAWING INTERPRETED PER GSFC X673-64-1~~

TITLE
EXTERNAL MECH. I/F
HST TO ASCS/NCS

RADIATOR LATCH INTERFACES

GE 1525373 REV A
CODE SCALE 1/10 WT SH 7 OF 10

GE1525373 REV A

60043196

REVISION				
SYM	ZONE	DESCRIPTION	DATE	APPROVAL

NOTES:

15 ALL SECTIONS OF THE MLI SKIRT WITH A STIFFNESS GREATER THAN .5 OZ. PER INCH OF DELFECTION NORMAL TO THE RADIATOR PANEL PER LINEAR INCH OF SKIRT ARE CLASSIFIED AS STRUCTURAL.

16 ALL STRUCTURAL SECTIONS OF THE MLI SKIRT SHALL REMAIN WITHIN THE RADIATOR ENVELOPES DEFINED IN GE2044729.

17 THE TOTAL FORCE REQUIRED TO COMPRESS THE FLIGHT ASCS NON-STRUCTURAL SKIRT TO THESE DIMENSIONS SHALL NOT EXCEED 10 LB. OR CAUSE THE SKIRT TO VIOLATE THE ENVELOPE OF GE2044729.

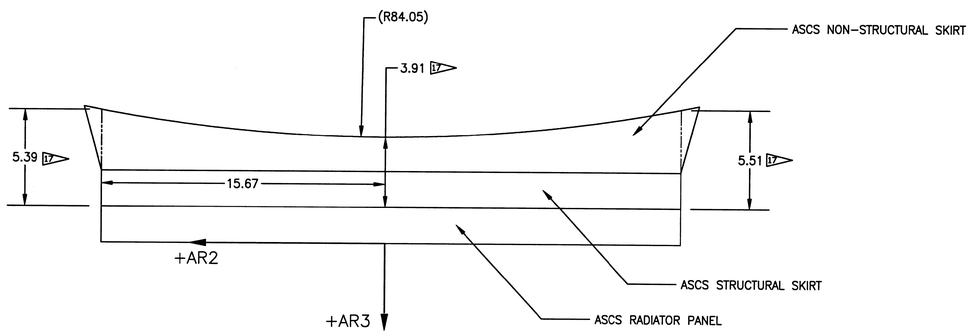

ASCS RADIATOR SKIRT STIFFNESS REQUIREMENT
NO SCALE

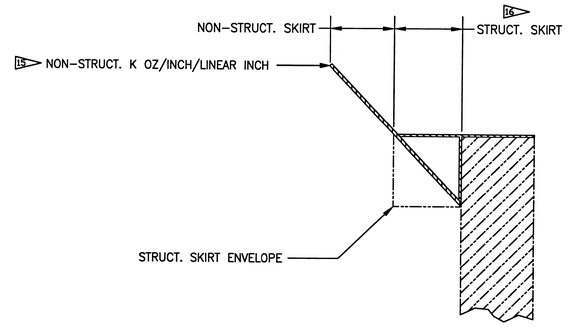

SKIRT CLASSIFICATION
NO SCALE

RADIATOR SKIRT INTERFACES

ITEM NO.	REQD	REQD	PART NO.	DESCRIPTION	MATERIAL	MATERIAL SPEC & NO.
				LIST OF MATERIAL		

UNLESS OTHERWISE SPECIFIED-DIMENSIONS ARE IN INCHES
TOLERANCES: .XX .XXX ∠ FRACTIONS ±1/16 125
REMOVE ALL BURRS AND SHARP EDGES R .010 OR CHAMFER MAX.

☐ FLIGHT HARDWARE
☐ HARDNESS TEST NOT REQUIRED ☐ NON FLIGHT
☐ TEST HARDNESS PER ASTM E-18, LOCATION OPTIONAL
☐ TEST HARDNESS PER ASTM E-18 WHERE INDICATED ON FIELD OF DRAWING THUS ⊗
☐ NO NON-DESTRUCTIVE EXAMINATION (NDE) REQ'D
☐ NDE REQUIRED PER S-313-009 CODE

NEXT ASSY | USED ON

NATIONAL AERONAUTICS AND SPACE ADMINISTRATION — Goddard Space Flight Center GREENBELT, MARYLAND

NAME	INIT	DATE
DESIGNER		
DRAWN		
CHECKED		
APPROVED		
APPROVED		
APPROVED—STRESS		
APPROVED—ENGINEER		

~~DRAWING INTERPRETED PER GSFC-X673-64-1~~

TITLE
EXTERNAL MECH. I/F
HST TO ASCS/NCS

GE 1525373 REV A
CODE SCALE 1/12 WT SH 8 OF 10

THIS DRAWING WAS PRODUCED USING
SOFTWARE: AutoCAD VERSION: R14
FILE NAME: 373-8A

GE1525373 REV A

60043197

NOTES:

18 RADIATOR POSITIONS BASED ON WORST CASE FRR LOCATIONS. (SEE SHEET 1.)

19 NO DOOR STOP EXTENSION REQUIRED FOR SI CHANGEOUT.

20 REDUCED CLEARANCE BASED ON ACTUAL INSTALLED LOCATION OF NCS RADIATOR DURING SM3B (REF. SAT-TM-2085).

REVISION				
SYM	ZONE	DESCRIPTION	DATE	APPROVAL

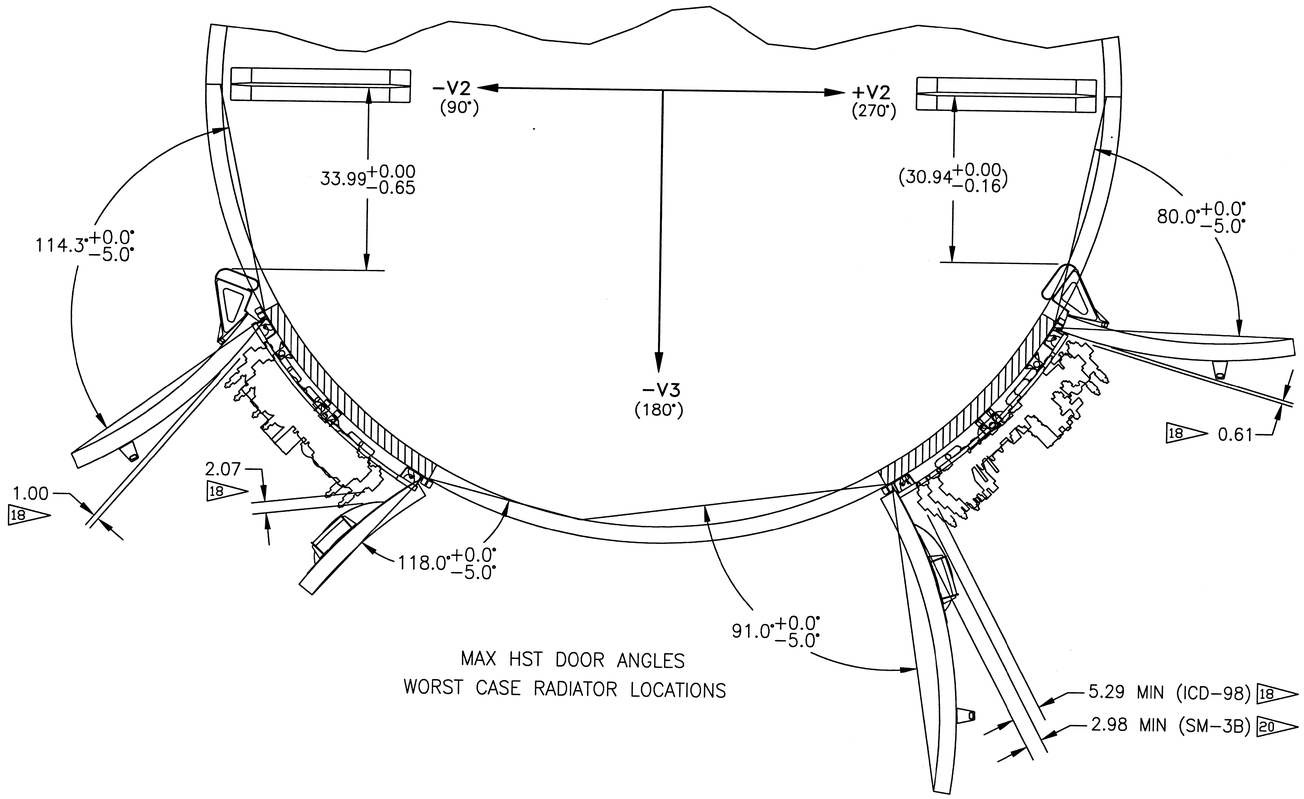

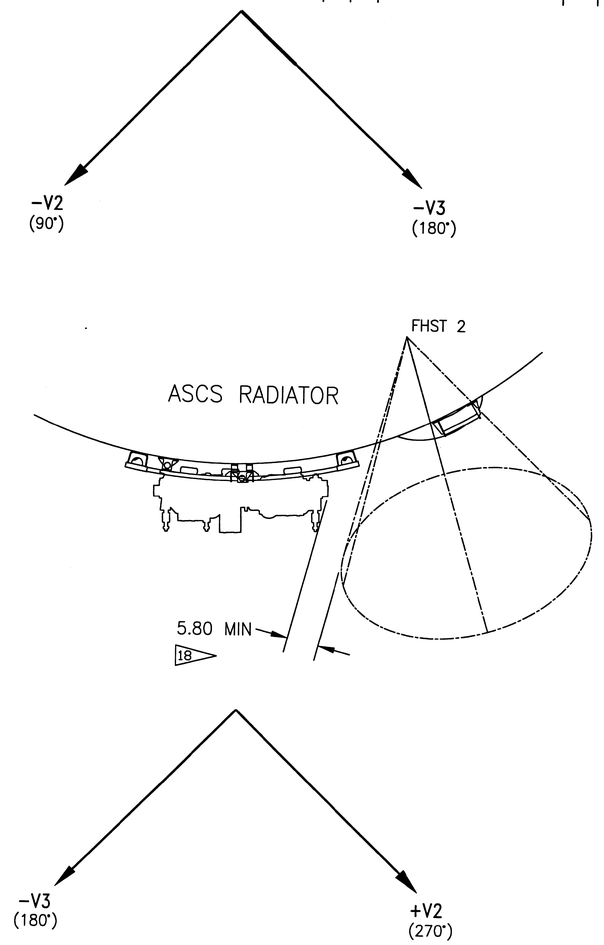

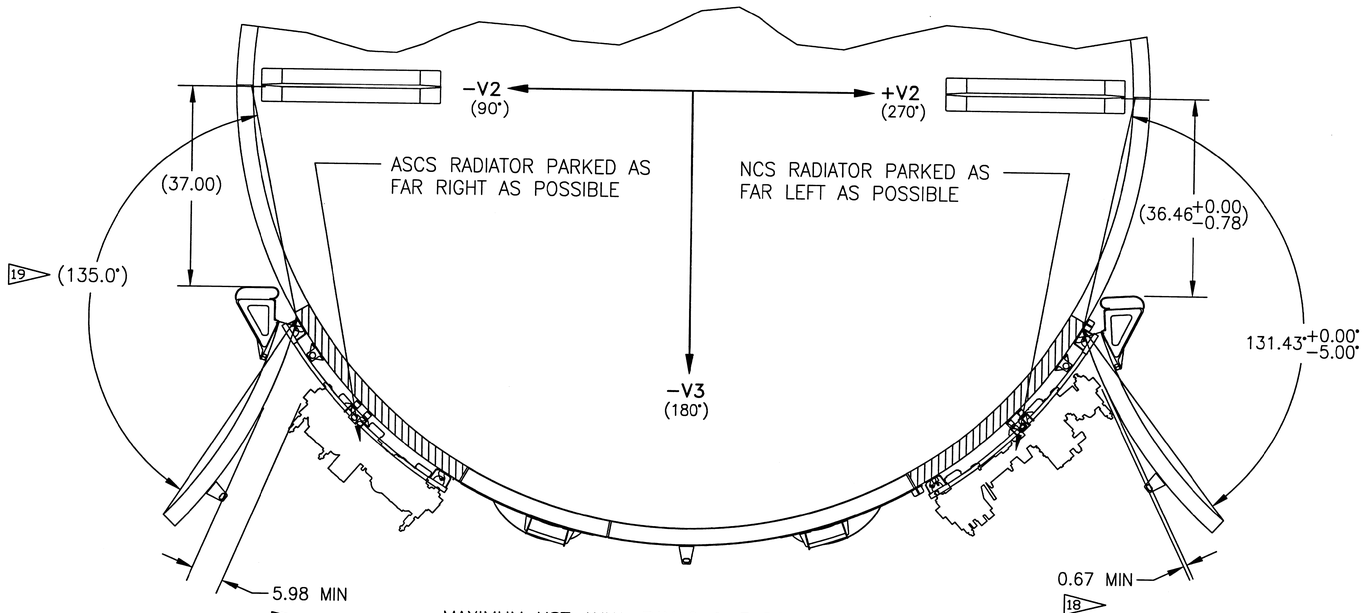

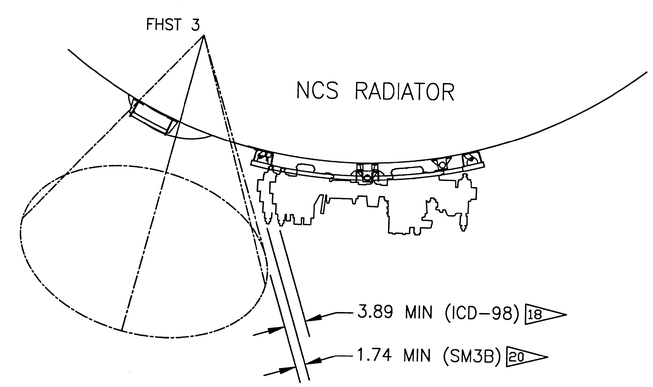

RADIATOR CLEARANCES TO DOORS AND FHST FOV

ITEM NO.	REQD	REQD	PART NO.	DESCRIPTION	MATERIAL	MATERIAL SPEC & NO.

LIST OF MATERIAL

UNLESS OTHERWISE SPECIFIED-DIMENSIONS ARE IN INCHES
TOLERANCES: .XX .XXX ∠ FRACTIONS ±1/16 125
REMOVE ALL BURRS AND SHARP EDGES R .010 OR CHAMFER MAX.

☐ FLIGHT HARDWARE
☐ HARDNESS TEST NOT REQUIRED ☐ NON FLIGHT
☐ TEST HARDNESS PER ASTM E-18, LOCATION OPTIONAL
☐ TEST HARDNESS PER ASTM E-18 WHERE INDICATED ON FIELD OF DRAWING THUS ◇
☐ NO NON-DESTRUCTIVE EXAMINATION (NDE) REQ'D
☐ NDE REQUIRED PER S-313-009 CODE

NEXT ASSY | USED ON

NATIONAL AERONAUTICS AND SPACE ADMINISTRATION — Goddard Space Flight Center — GREENBELT, MARYLAND

NAME	INIT	DATE
DESIGNER		
DRAWN		
CHECKED		
APPROVED		
APPROVED		
APPROVED-STRESS		
APPROVED-ENGINEER		

~~DRAWING INTERPRETED PER GSFC X673-64-1~~

TITLE
EXTERNAL MECH. I/F
HST TO ASCS/NCS

CODE | GE 1525373 | REV A
SCALE 1/10 | WT | SH 9 OF 10

THIS DRAWING WAS PRODUCED USING
SOFTWARE: AutoCAD VERSION: R14
FILE NAME: 373-9A

GE1525373 A

60043198

REVISION				
SYM	ZONE	DESCRIPTION	DATE	APPROVAL

NOTES:

21 RADIATOR POSITIONS INCLUDE THE LOCATION TOLERANCES OF FRR 26 & 27 (SEE SHEET 1).

22 INDICATES AREA OF FIRST CONTACT WITH RADIATOR.

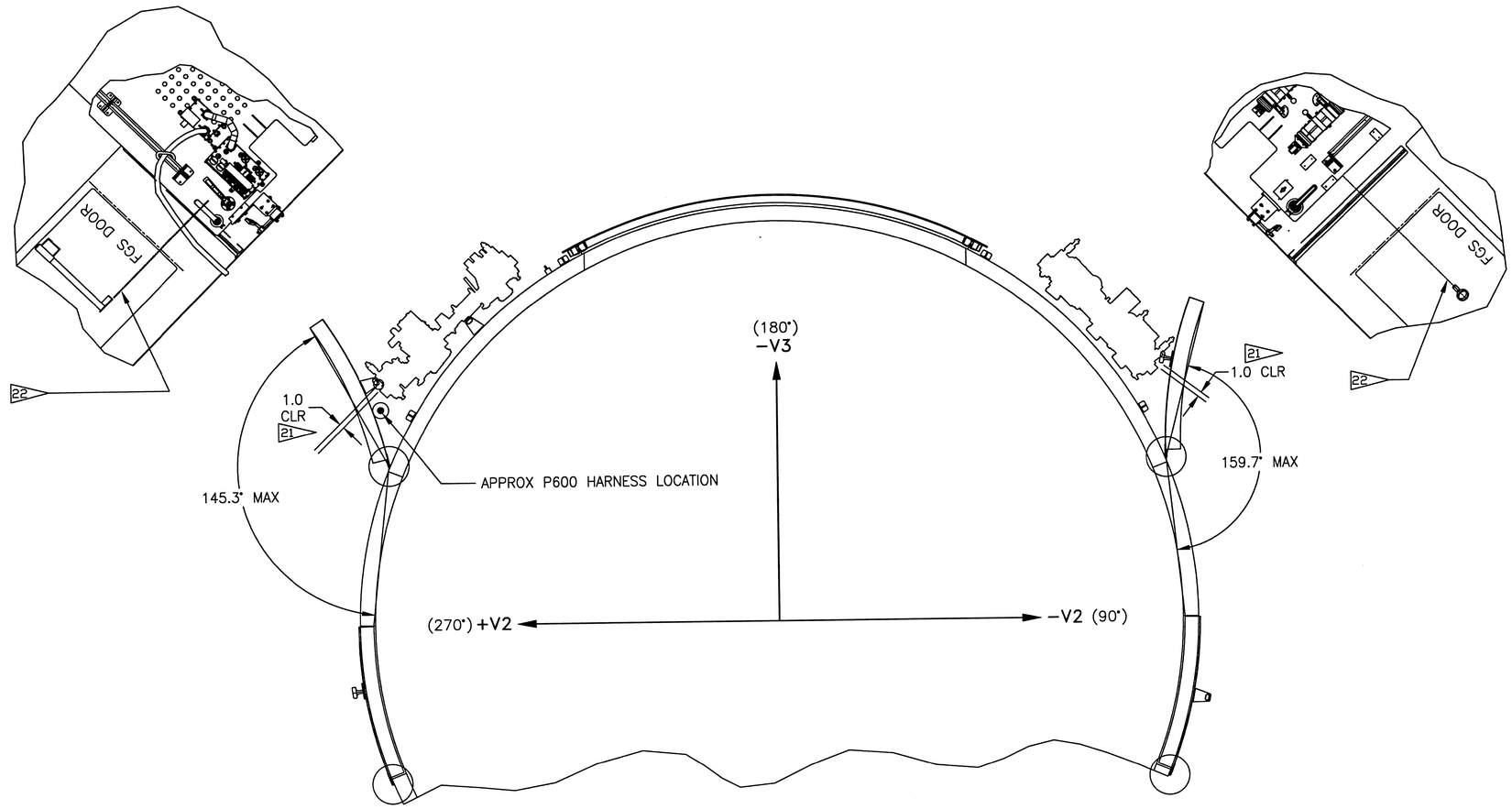

MAXIMUM ALLOWABLE FGS DOOR ANGLES –
RADIATORS POSTIONED TOWARD ±V2

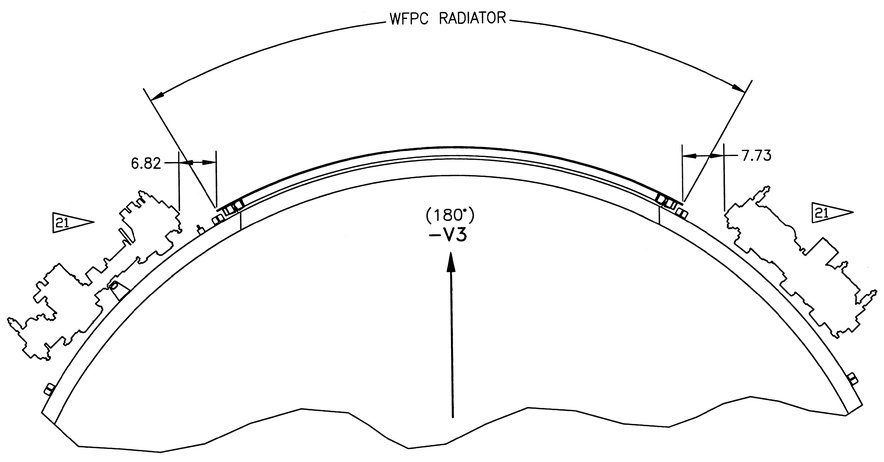

MINIMUM WFPC CHANGEOUT CLEARANCE
RADIATORS POSITIONED TOWARD −V3

FGS DOOR OPENINGS AND WFPC CLEARANCE

ITEM NO.	REQD	REQD	PART NO.	DESCRIPTION	MATERIAL	MATERIAL SPEC & NO.
				LIST OF MATERIAL		

UNLESS OTHERWISE SPECIFIED–DIMENSIONS ARE IN INCHES
TOLERANCES: .XX .XXX ∠ FRACTIONS ±1/16 125
REMOVE ALL BURRS AND SHARP EDGES R .010 OR CHAMFER MAX.

☐ FLIGHT HARDWARE ☐ NON FLIGHT
☐ HARDNESS TEST NOT REQUIRED
☐ TEST HARDNESS PER ASTM E-18, LOCATION OPTIONAL
☐ TEST HARDNESS PER ASTM E-18 WHERE INDICATED ON FIELD OF DRAWING THUS ⊙
☐ NO NON-DESTRUCTIVE EXAMINATION (NDE) REQ'D
☐ NDE REQUIRED PER S-313-009 CODE

NEXT ASSY | USED ON

NATIONAL AERONAUTICS AND SPACE ADMINISTRATION — Goddard Space Flight Center — GREENBELT, MARYLAND

NAME	INIT	DATE
DESIGNER		
DRAWN		
CHECKED		
APPROVED		
APPROVED		
APPROVED–STRESS		
APPROVED–ENGINEER		

DRAWING INTERPRETED PER GSFC–X673–64–1

TITLE
EXTERNAL MECH. I/F
HST TO ASCS/NCS

GE 1525373 REV A

CODE | SCALE 1/10 | WT | SH 10 OF 10

60043199

THIS DRAWING WAS PRODUCED USING
SOFTWARE: AutoCAD VERSION: R14
FILE NAME: 373–10A

GE1525373 REV A