NOTES:

1. CONDUIT LOCATIONS ARE DEFINED IN GE1525373.
2. UNLESS OTHERWISE SPECIFIED, A MINIMUM CLEARANCE OF .5 IS MAINTAINED BETWEEN ENVELOPES AND CONDUIT HARDWARE.
3. COOLING SYSTEM HARNESSES AND CPL'S ARE NOT INCLUDED IN CONDUIT ENVELOPES.
4. ENVELOPE SURFACE V1 LOCATIONS ARE COINCIDENT WITH THE OUTSIDE CRYOVENT SURFACES. REF. GE2044727.

| REVISION | | | | |
|---|---|---|---|---|
| SYM | ZONE | DESCRIPTION | DATE | APPROVAL |
| A | – | INCORPORATE REV –, EO 01 | 12/9/02<br>12/11/02<br>12/17/02<br>1/3/03<br>01/14/03<br>1/15/03<br>20 Feb '03<br>7/05/03<br>10/17/03 D.C.C. | [illegible]<br>[illegible]<br>[illegible]<br>[illegible]<br>[illegible]<br>[illegible]<br>J Cooper<br>[illegible] |

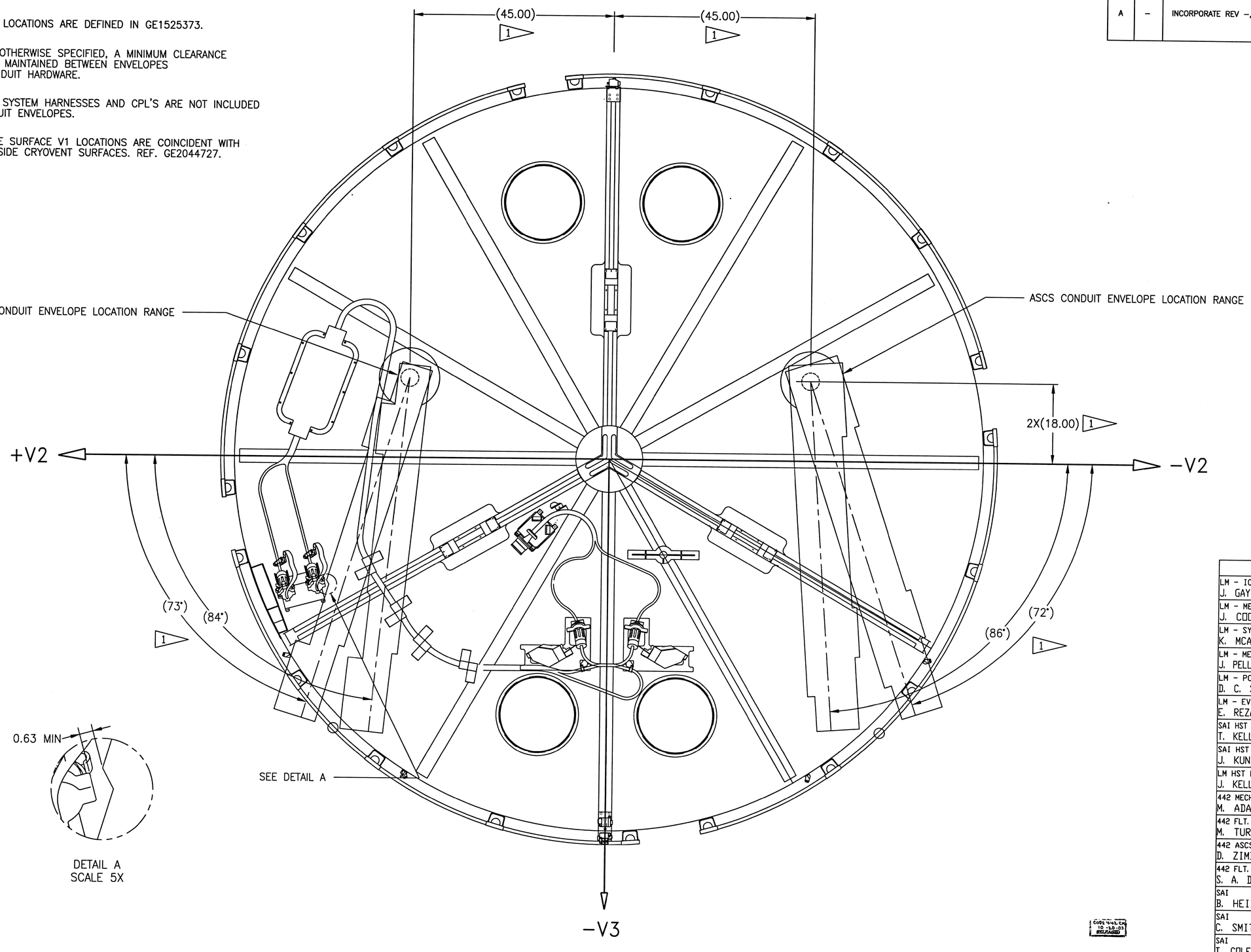


VIEW LOOKING FORWARD




DETAIL A
SCALE 5X

| NAME | INIT | DATE |
|---|---|---|
| LM - ICD DWG REE<br>J. GAY | JG | 10/5/01 |
| LM - METROLOGY<br>J. COOPER | JC | 12/13/01 |
| LM - SYSTEMS<br>K. MCAVEETY | KM | 11/5/01 |
| LM - MECHANISMS<br>J. PELLICCIOTTI | JP | 1/28/02 |
| LM - PCS<br>D. C. SMITH | DCS | 11/17/01 |
| LM - EVA<br>E. REZAC | ER | 11/13/01 |
| SAI HST ENGINEERING<br>T. KELLY | TAK | 10/15/01 |
| SAI HST PROGRAM MGR.<br>J. KUNST | JMK | 10/26/01 |
| LM HST PROGRAM MGR.<br>J. KELLEY | JLK | 11/9/01 |
| 442 MECH. SYSTEMS MGR.<br>M. ADAMS | MA | 11/26/01 |
| 442 FLT. SYSTEMS MGR.<br>M. TURCZYN | MT | 11/26/01 |
| 442 ASCS/NCS MGR.<br>D. ZIMBELMAN | DZ | 11/15/01 |
| 442 FLT. ASSURANCE MGR.<br>S. A. DAVIES | SAD | 1/25/02 |
| SAI<br>B. HEIDENREICH | RDH | 10/12/01 |
| SAI<br>C. SMITH | CTS | 10/15/01 |
| SAI<br>T. COLE | TJC | 11/28/01 |

TBR LIST

| TBR NO. | SHEET | DESCRIPTION | RESOLUTION |
|---|---|---|---|
| ~~ENV-1~~ | ~~3~~ | ~~NEED END VIEW~~ | ~~SAI TO PROVIDE~~ |
| ~~ENV-2~~ | ~~3~~ | ~~NEED LATEST VIEWS OF ENDCAP ASSY~~ | ~~SAI TO PROVIDE~~ |

| ITEM NO. | REQD | REQD | PART NO. | DESCRIPTION | MATERIAL | MATERIAL SPEC & NO. |
|---|---|---|---|---|---|---|

LIST OF MATERIAL

UNLESS OTHERWISE SPECIFIED-DIMENSIONS ARE IN INCHES
TOLERANCES:
.XX .XXX ∠ FRACTIONS
.02 .005 ±1° ±1/16 125
REMOVE ALL BURRS AND SHARP EDGES R .010 OR CHAMFER MAX.

☐ FLIGHT HARDWARE
☒ HARDNESS TEST NOT REQUIRED ☒ NON FLIGHT
☐ TEST HARDNESS PER ASTM E-18, LOCATION OPTIONAL
☐ TEST HARDNESS PER ASTM E-18 WHERE INDICATED ON FIELD OF DRAWING THUS
☒ NO NON-DESTRUCTIVE EXAMINATION (NDE) REQ'D
☐ NDE REQUIRED PER S-313-009 CODE

| XXX | HST |
|---|---|
| NEXT ASSY | USED ON |

NATIONAL AERONAUTICS AND SPACE ADMINISTRATION — Goddard Space Flight Center GREENBELT, MARYLAND

| NAME | INIT | DATE |
|---|---|---|
| DESIGNER H. TANG | HT | 11/21/01 |
| DRAWN H. TANG | HT | 11/21/01 |
| CHECKED J. GAY | JG | 11/7/01 |
| APPROVED-ENGR | | |
| APPROVED | | |
| APPROVED-QA | | |
| APPROVED-PROJ | | |

~~DRAWING INTERPRETED PER GSFC X673 64 1~~

TITLE
ENVELOPES, CONDUIT COOLING SYSTEM HST

GE 2044728 REV A
CODE SCALE 1/8 WT SH 1 OF 3

THIS DRAWING WAS PRODUCED USING
SOFTWARE: AUTOCAD VERSION: R14
FILE NAME: 4728-A

GE 2044728 REV A

60043212

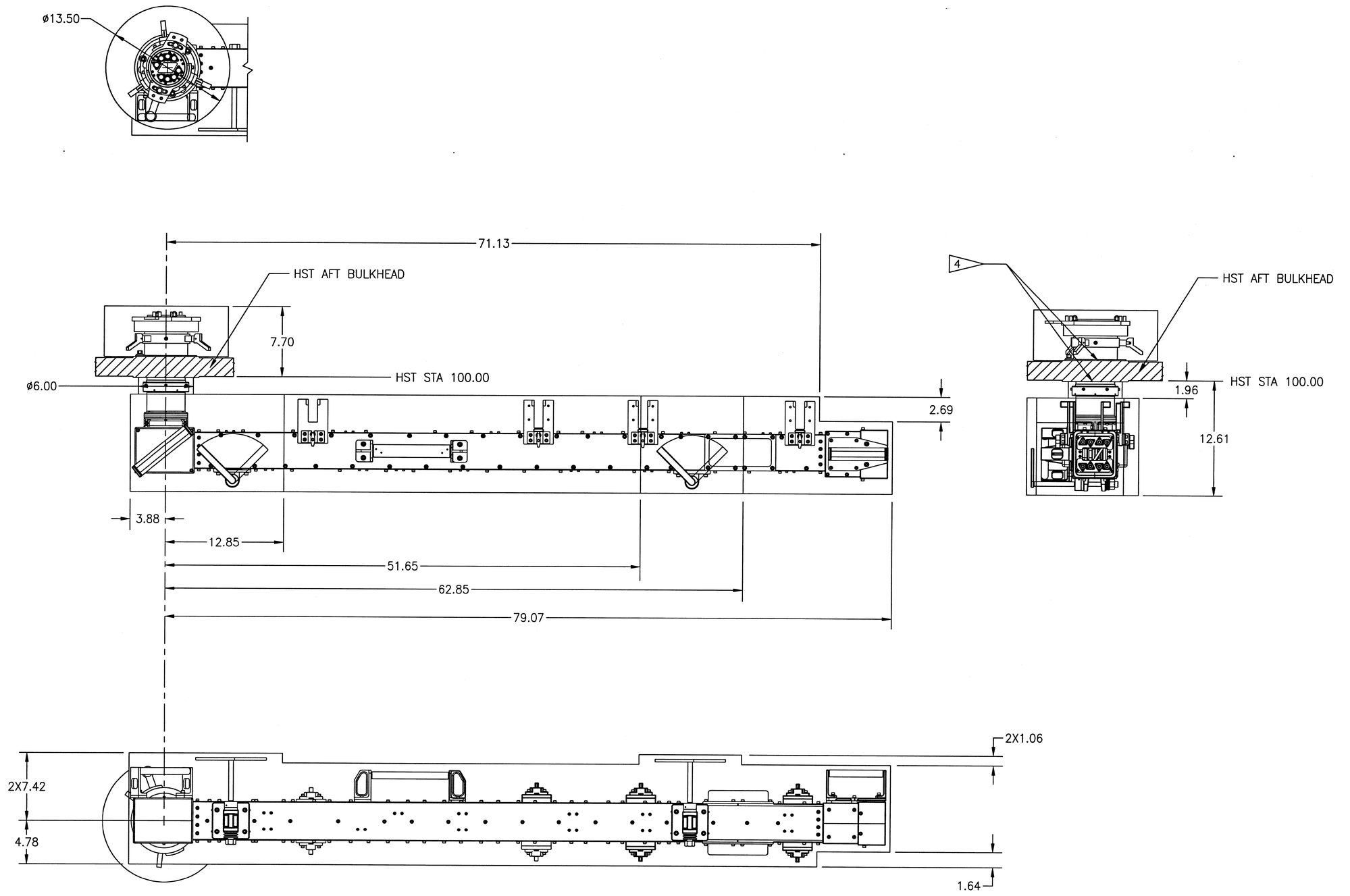


ASCS CONDUIT ENVELOPE

| | | | |
|---|---|---|---|
| NATIONAL AERONAUTICS AND SPACE ADMINISTRATION | Goddard Space Flight Center GREENBELT, MARYLAND | | |
| NAME | INIT | DATE | TITLE ENVELOPE, CONDUIT COOLING SYSTEM HST |
| DESIGNER H. TANG | | | |
| DRAWN H. TANG | | | |
| CHECKER J. GAY | | | GE 2044728 REV A |
| | | | CODE GE SCALE 1/4 SH 2 OF 3 |

GE 2044728 REV A

60043213

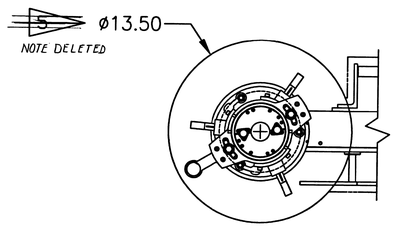


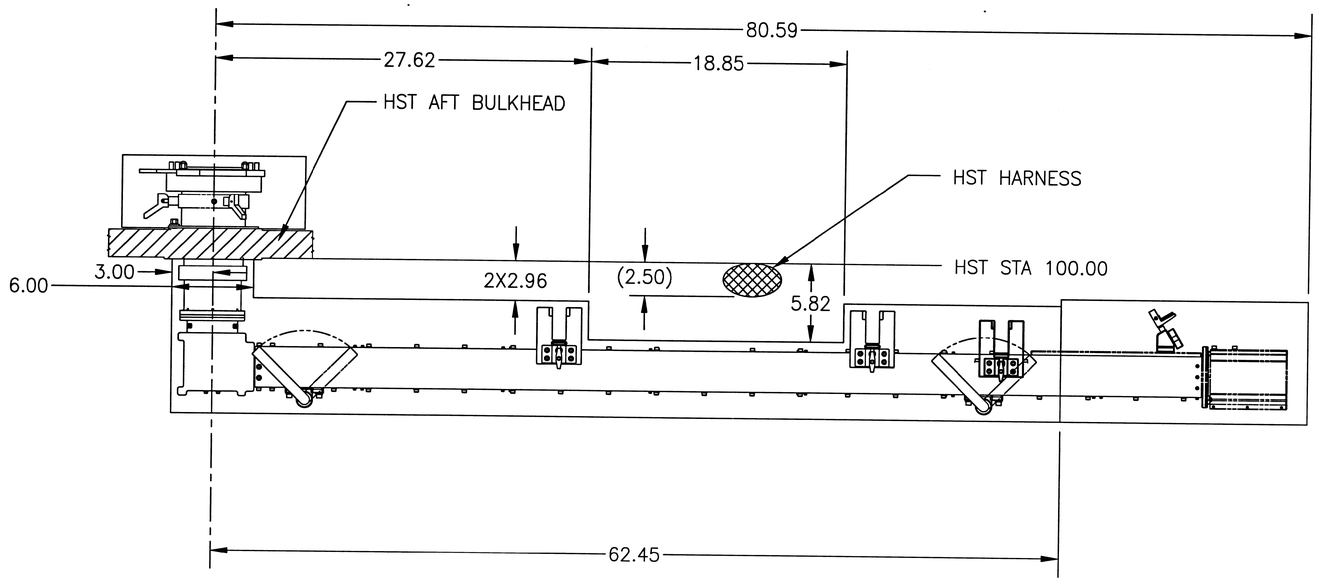


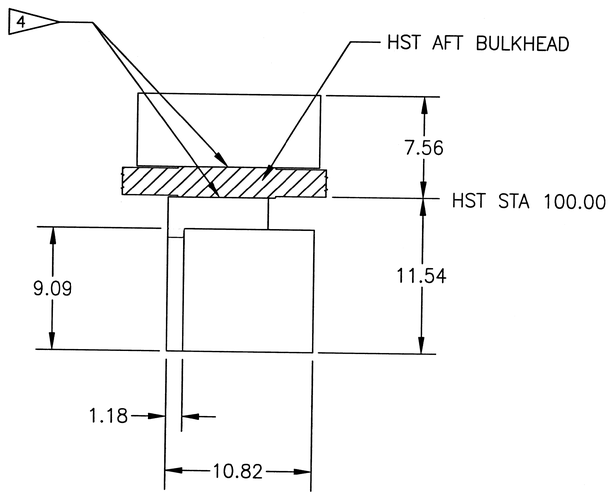


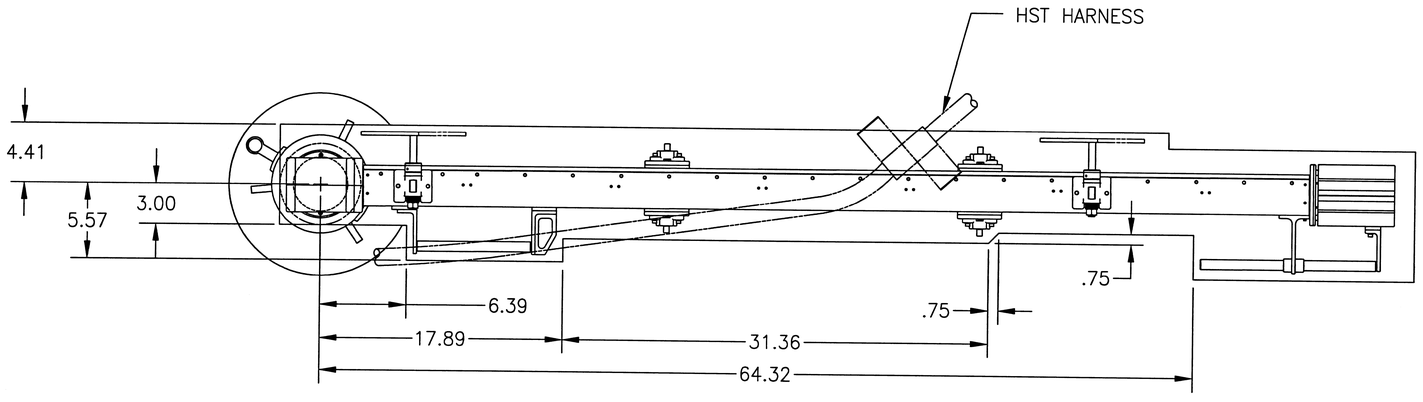


NCS CONDUIT ENVELOPE

| | | | |
|---|---|---|---|
| NATIONAL AERONAUTICS AND SPACE ADMINISTRATION | Goddard Space Flight Center GREENBELT, MARYLAND | | |
| NAME | INIT | DATE | TITLE ENVELOPE, CONDUIT COOLING SYSTEM HST |
| DESIGNER H. TANG | | | |
| DRAWN H. TANG | | | |
| CHECKED J. GAY | | | GE 2044728 REV A |
| | | | CODE SCALE 1/4 SH 3 OF 3 |

GE 2044728 A

G0043214