HUBBLE SPACE TELESCOPE
LIBRARY #TM-031899

LMMS/P564410
Revision D
November 24, 2003

HUBBLE SPACE TELESCOPE FOURTH SERVICING MISSION (SM4) MASS PROPERTIES STATUS

ST/SE-04

FLIGHT SYSTEMS & SERVICING PROJECT

SUBMITTED IN ACCORDANCE WITH REQUIREMENTS OF
GSFC CONTRACT NAS5-50000, Part C

Lockheed Martin Corporation
Space Systems Company

FOREWORD

MASS PROPERTIES STATUS REPORT

This document was prepared by LMSSC (Lockheed Martin Space Systems Company) for the Hubble Space Telescope (HST) Fourth Servicing Mission (SM4) in accordance with Data Requirements ST/SE-04 of NASA/Goddard Space Flight Center (GSFC). The data contained herein provides a systems engineering evaluation of the Fourth Servicing Mission (SM4) configuration mass properties for launch, on-orbit, and landing events.

The mass properties engineering contact is Amy Pergosky at (301) 901-6165.

/s/
A. M. Pergosky
HST Flight Systems & Servicing
Mechanical Systems

Approved: /s/
K. Mathews
HST Flight Systems & Servicing
Mechanical Development Manager

Approved: /s/
D. Connolly
Program Manager
Hubble Space Telescope
Flight Systems & Servicing

TABLE OF CONTENTS

Section		Page
1	Introduction and Summary	1-1
2	Servicing Mission Summary Weight Statement	2-1
3	Center of Gravity / Mass Properties	3-1
4	SM4 Weight History	4-1
5	Shuttle Payload Data	5-1
5.1	Weight Data	5-1
5.1.1	Mass Properties Mission Sequence	5-2
5.1.2	Weight and Mass Properties Reporting	5-2
5.1.3	Weight and Balance Test	5-2
5.1.4	Weight and Mass Properties Certification	5-2
5.2	Hubble Space Telescope	5-26
5.2.1	Weight and Center of Gravity	5-26
5.2.2	HST Transformation Matrices	5-27
5.3	Payload Physical Function Data	5-30
5.3.1	Payload Deployment and Retrieval System Data	5-30
5.3.2	Mass Properties	5-33
6	Introduction and Summary – FSS Carrier (Launch)	6-1
6.1	FSS Weight Details	6-3
6.2	FSS Change Analysis	6-6
6.3	FSS Mass Properties	6-6
6.4	Transformation Matrices	6-8
6.5	Pending and Potential Changes	6-8
6.5.1	Structure	6-8
6.5.2	Avionics	6-8
6.5.3	BAPS (Pivoting Components)	6-8
6.5.4	BAPS (Non-Pivoting Components)	6-8
6.5.5	Miscellaneous	6-9
6.5.6	EVA	6-9
6.5.7	STIK & Enclosure	6-9
6.6	Orbiter Payload Data	6-9
6.7	Weight and Mass Properties Reporting	6-9
6.8	Weight and Balance Test	6-9
6.9	Weight and Mass Properties Certification	6-9
7	Introduction and Summary – ORUC (Launch)	7-1
7.1	ORUC Weight Details	7-3
7.2	ORUC Change Analysis	7-8
7.3	ORUC Mass Properties	7-9
7.4	Transformation Matrices	7-11
7.5	Pending and Potential Changes	7-11
7.5.1	Pallet and Keel	7-11
7.5.2	Avionics	7-11
7.5.3	EVA	7-11
7.5.4	Load Isolation System (LIS)	7-11
7.5.5	Shelf	7-12
7.5.6	Sprung Mass (LIS)	7-12
7.5.7	SOPE	7-12
7.5.8	ASIPE	7-12
7.5.9	FSIPE	7-12
7.5.10	NPE	7-12
7.5.11	ATMs	7-12
7.5.12	ORUs / ORIs / CATs	7-12

7.6 Orbiter Payload Data 7-12
7.7 Weight and Mass Properties Reporting 7-13
7.8 Weight and Balance Test 7-13
7.9 Weight and Mass Properties Certification 7-13
8 Introduction and Summary – SLIC (Launch) 8-1
8.1 SLIC Weight Details 8-3
8.2 SLIC Change Analysis 8-5
8.3 SLIC Mass Properties 8-5
8.4 Transformation Matrices 8-7
8.5 Pending and Potential Changes 8-7
8.5.1 Pallet 8-7
8.5.2 WSIPE 8-7
8.5.3 Isolators 8-7
8.5.4 COPE 8-7
8.5.5 Avionics 8-8
8.5.6 EVA 8-8
8.5.7 Miscellaneous 8-8
8.5.8 ORUs & Miscellaneous Hardware 8-8
8.6 Orbiter Payload Data 8-8
8.7 Weight and Mass Properties Reporting 8-8
8.8 Weight and Balance Test 8-8
8.9 Weight and Mass Properties Certification 8-8
9 References 9-1
10 Acronyms 10-1

TABLES

Table Number — Page

Table 1-1. Specification Launch Weight Status 1-2
Table 2-1. Summary Launch Weight Status 2-2
Table 4-1. SM4 Weight History Table 4-1
Table 5-1. SM4 Launch Payload Weights 5-1
Table 5-2. SM4 Landing Payload Weights 5-1
Table 5-3. SM4 Pre-Launch Mass Properties, Orbiter Coordinates 5-5
Table 5-4. SM4 Launch Mass Properties (BAPS Vertical), Orbiter Coordinates 5-6
Table 5-5. SM4 Pre-Berth Mass Properties (BAPS Horizontal), Orbiter Coordinates 5-7
Table 5-6. SM4 HST Pre-Change-out Mass Properties, Orbiter Coordinates 5-8
Table 5-7. SM4 HST Berthed Pre-Change-out Mass Properties, Orbiter Coordinates 5-9
Table 5-8. SM4 HST Berthed Pre-Change-out Mass Properties, Orbiter Coordinates 5-10
Table 5-9. EVA Day 1 - Post RSU Change-out, Orbiter Coordinates 5-11
Table 5-10. EVA Day 1 - Post DSC Installation, Orbiter Coordinates 5-12
Table 5-11. Post EVA Day 1 - Unscheduled Release, HST Coordinates 5-13
Table 5-12. Post EVA Day 1 - Unscheduled Release, Orbiter Coordinates 5-13
Table 5-13. EVA Day 2 - Post COS / COSTAR Change-out, Orbiter Coordinates 5-14
Table 5-14. EVA Day 2 - Post NOBL 7 & 8 Installation, Orbiter Coordinates 5-15
Table 5-15. EVA Day 2 - Post NOBL 5 Installation, Orbiter Coordinates 5-16
Table 5-16. Post EVA Day 2 - Unscheduled Release, HST Coordinates 5-17
Table 5-17. Post EVA Day 2 - Unscheduled Release, Orbiter Coordinates 5-17
Table 5-18. EVA Day 3 - Post WFPC II / WFC3 Change-out, Orbiter Coordinates 5-18
Table 5-19. EVA Day 3 - Post Battery Change-out, Orbiter Coordinates 5-19
Table 5-20. Post EVA Day 3 - Unscheduled Release, HST Coordinates 5-20
Table 5-21. Post EVA Day 3 - Unscheduled Release, Orbiter Coordinates 5-20
Table 5-22. EVA Day 4 – Post ASCS Radiator Installation, Orbiter Coordinates 5-21
Table 5-23. EVA Day 4 – Post STIK Installation, Orbiter Coordinates 5-22
Table 5-24. Post EVA Day 4 - Unscheduled Release, HST Coordinates 5-23
Table 5-25. Post EVA Day 4 - Unscheduled Release, Orbiter Coordinates 5-23
Table 5-26. EVA Day 5 - Post FGS3 / FGS3R Change-out & OCE-EK Connect, Orbiter Coordinates 5-24
Table 5-27. SM4 Landing Mass Properties, Orbiter Coordinates 5-25
Table 5-28. HST Deployed Mass Properties Data (Post SM3B) - Incorrect 5-26
Table 5-29. HST Deployed Mass Properties Data (Post SM3B) – Metric - Incorrect 5-26
Table 5-30. HST Deployed Mass Properties Data (Post SM3B) - Corrected 5-26
Table 5-31. HST Deployed Mass Properties Data (Post SM3B) – Metric - Corrected 5-27
Table 5-32. HST Deployed Mass Properties Data (Post SM4) 5-27
Table 5-33. HST Deployed Mass Properties Data (Post SM4) - Metric 5-27
Table 5-34. Post SM3B Direction Cosines 5-27
Table 5-35. Post SM4 Direction Cosines 5-28
Table 5-36. Modifications to HST Mass Properties from SM3B Report 5-34
Table 5-37. Scheduled ORUs / ORIs in HST Coordinates 5-35
Table 5-38. Scheduled ORU / ORIs on the FSS, in Orbiter Coordinates 5-37
Table 5-39. Scheduled ORUs / ORIs on the ORUC, in Orbiter Coordinates 5-38
Table 5-40. Scheduled ORUs / ORIs on the SLIC, in Orbiter Coordinates 5-40
Table 5-41. Scheduled ORUs / ORIs on the Middeck, in Orbiter Coordinates 5-41
Table 6-1. FSS Weight Details 6-3
Table 6-2. FSS Mass Properties 6-7
Table 6-3. FSS CG – Orbiter Coordinates 6-9
Table 7-1. ORUC Weight Details 7-3
Table 7-2. ORUC Mass Properties 7-10

Table 7-3. ORUC CG – Orbiter Coordinates 7-12
Table 8-1. SLIC Weight Details 8-3
Table 8-2. SLIC Mass Properties 8-6
Table 8-3. SLIC CG – Orbiter Coordinates 8-8

FIGURES

Section Page

Figure 1-1. SM4 Payload (Launch Configuration) 1-2
Figure 2-1. SM4 FSS (Launch Configuration, Aft View) 2-3
Figure 2-2. SM4 FSS (Launch Configuration, Forward View) 2-4
Figure 2-3. SM4 ORUC (Launch Configuration, Aft View) 2-5
Figure 2-4. SM4 ORUC (Launch Configuration, Forward View) 2-6
Figure 2-5. SM4 SLIC (Launch Configuration, Aft View) 2-7
Figure 2-6. SM4 SLIC (Launch Configuration, Forward View 2-8
Figure 2-7. Axial SI Origins in HST Coordinates, Post SM4 2-9
Figure 2-8. Radial SI Origins in HST Coordinates, Post SM4 2-10
Figure 4-1. SM4 Weight History Chart 4-1
Figure 5-1. HST SM4 PAS Definition Origin, HST GFAS 5-3
Figure 5-2. SM4 BAPS Rotational Positions 5-4
Figure 5-3. HST Coordinate Axis System 5-29
Figure 5-4. HST Cargo Elements and Orbiter Coordinate Axis System 5-31
Figure 6-1. FSS Weight History 6-2
Figure 7-1. ORUC Weight History 7-2
Figure 8-1. SLIC Weight History 8-2

APPENDICES

Section Page

Appendix A. FSS Mass Properties A-1
Appendix B. ORUC Mass Properties B-1
Appendix C. SLIC Mass Properties C-1
Appendix D. Middeck Mass Properties D-1
Appendix E. HST Sequence of Events E-1

1 Introduction and Summary

This Mass Properties Report is published in compliance with Data Requirement ST/SE-04 for the HST SM4 payload complement (ref. Figure 1-1). This report provides mass property status with respect to established weight budgets, and provides the mass property values for the pre-launch to landing sequence of events. These values are incorporated in math models, simulations, and used in related analyses. This issue of ST/SE-04 reflects current program maturity for all hardware. It includes mass properties data for orbiter launch, initial on-orbit mission events, HST crew aids and tools (CATs), HST deploy, and orbiter landing. Section 5 contains data, which satisfies the mass properties requirements for the Payload Integration Plan (PIP) Annex 1, Payload Data Package Annex.

The SM4 total payload weight is 18948 lb. This provides 552 lb of margin, in addition to the 500 lb Project Reserve, with respect to the requested PIP weight allocation of 20000 lb. The mass property values contained within this report reflect 69.4% actual, 22.2% calculated, and 8.4% estimated for the hardware. The sequence of events mass properties reported in this issue of SE-04 are based on the current timeline dated 10/18/02 (Reference 19). The hardware's launch and landing locations documented in this report are based on the Servicing Mission Equipment List (SMEL), Baseline, Rev. 4, dated 9/26/03 (Reference 20).

The Flight Support System (FSS) weight is 4800 lb and includes the Space Telescope Imaging Spectrograph (STIS) Thermal Interface Kit (STIK) as an Orbital Replacement Unit (ORU) for this mission (ref. Figures 2-1 and 2-2). This weight reflects 98.0% actual, 0.5% calculated and 1.5% estimated. A detailed list of the hardware included in the FSS weight, along with their contingency percentages, is included in Appendix A.

The ORU Carrier (ORUC) weight is 7362 lb. (ref. Figures 2-3 and 2-4) and is responsible for the transportation of the Electronic Control Unit (ECU), Rate Sensor Units (RSUs), Data Management Unit (DMU)-Scientific Instrument (SI) Control & Data Handling (SIC&DH) Cross strap (DSC), Cosmic Origins Spectrograph (COS), Fine Guidance Sensor (FGS), New Outer Blanket Layers (NOBLs) as well as the Auxiliary Transport Modules (ATMs) containing cooling system hardware. This weight reflects 93.7% actual, 0.7% calculated and 5.6% estimated. A detailed list of the hardware included in the ORUC weight, along with their contingency percentages, is included in Appendix B.

The Super Lightweight Integrated Carrier (SLIC) weight is 6592 lb. (ref Figures 2-5 and 2-6). This weight includes the Wide Field Camera-3 (WFC3), batteries and the Aft Shroud Cooling System (ASCS) Radiator. This weight reflects 22.9% actual, 61.1% calculated and 16.0% estimated. A detailed list of the hardware included in the SLIC weight, along with their contingency percentages, is included in Appendix C.

The ancillary middeck hardware and Temporary Stowage Assembly (TSA) consist of CATs resulting in a total weight of 194 lb. This weight reflects 23.0% actual, 54.2% calculated and 22.8% estimated. A detailed list of the hardware included in the middeck and TSA weight, along with their contingency percentages, is included in Appendix D. The percentage of actual weights reported is low because the source for many of the weights have not been verified yet with work orders.

The sequence of events, which detail what hardware is installed and removed on HST and the carriers during each EVA day's events, is listed in Appendix E.

Weight changes for all carriers and the middeck hardware will be reported in subsequent updated issues of the ST/SE-04. Table 1-1, Specification Weight Status, compares the current SM4 configuration with the STR-126 weight budget allocations for the launch configuration.

Table 1-1. Specification Launch Weight Status

SM4 Hardware Component	Weight Allocation per STR-126 (lbs)	Current Weight, including contingency (lbs)	Weight Margin Above Allocation (lbs)
FSS	4850	4800	+50
ORUC TOTAL	7400	7362	+38
SLIC TOTAL	7000	6592	+408
Middeck & TSA TOTAL	250	194	+56
SM4 TOTAL WEIGHT	19500	18948	+552
Project Reserve	500	-	-
PIP Limit (TBR)	20000	-	-

Note: Values throughout this report may vary by up to 1 lb. due to round off.

Figure 1-1. SM4 Payload (Launch Configuration)

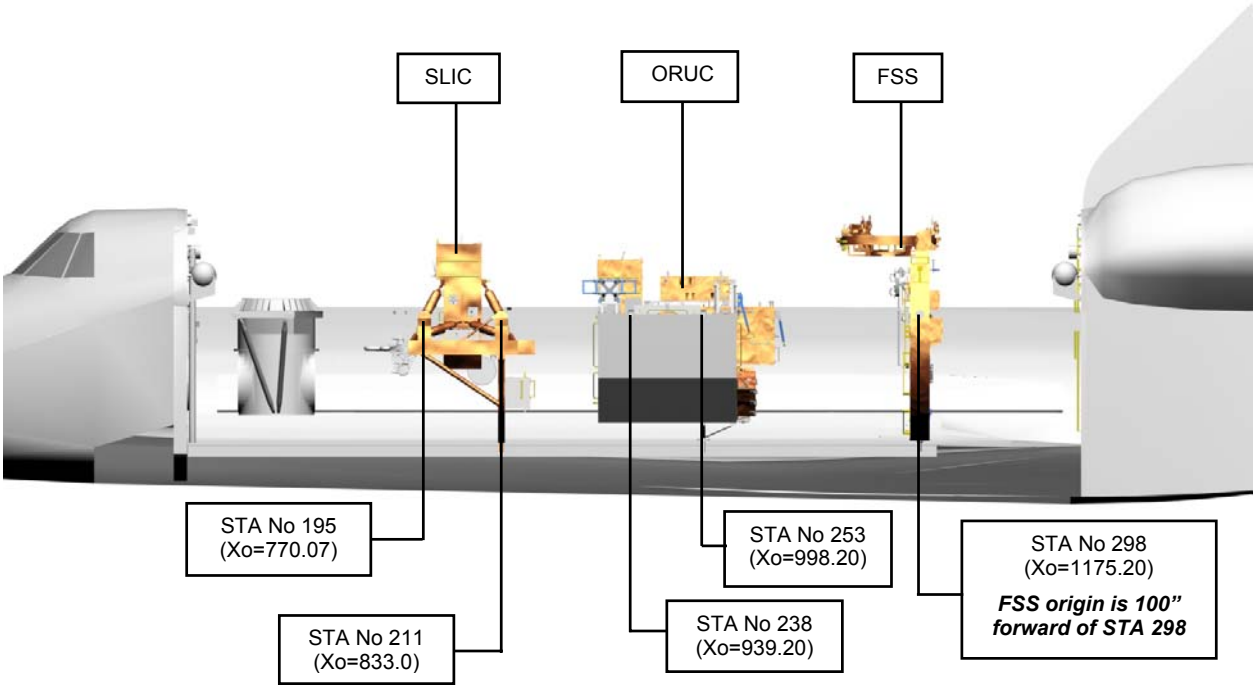

Carrier origins with respect to Orbiter origin:

SLIC	ORUC	FSS
Xo = 833.0	Xo = 998.20	Xo = 1075.20
Yo = 0.0	Yo = 0.0	Yo = 0.0
Zo = 414.0	Zo = 414.0	Zo = 300.0

2 Servicing Mission Summary Weight Statement

Section 2 provides subsystem level summary weight statements for the FSS, ORUC, SLIC and CATs. Table 2-1 contains a summary of the Space Support Equipment (SSE) and their maturity levels. A detailed breakdown, including the weights of the ORUs and Orbital Replacement Instruments (ORIs) supported or enclosed on the FSS, ORUC and SLIC can be found in Tables 6-1, 7-1 and 8-1, respectively. Maturity levels are defined below and are categorized as estimated, calculated, or actual.

"ACTUAL" Reflect actual weighing of the hardware.

"CALCULATED" Calculated weights derived from released drawings.

"ESTIMATED" Includes SSE, SIs, ORUs, and CATs items where the design is expected to mature resulting in subsequent weight growth.

Inertia products as listed in this document are positive integrals. The inertia tensor form is defined as follows:

$$\begin{vmatrix} Ixx & -Ixy & -Ixz \\ -Iyx & Iyy & -Iyz \\ -Izx & -Izy & Izz \end{vmatrix}$$

Table 2-1. Summary Launch Weight Status

SM4 Payload Element	Previous Report Weight Rev. - (lbs)	Current Weight with contingency (lbs)	Delta Weight (lbs.)	Weight Category (%)		
				Act. (%)	Calc. (%)	Est. (%)
FSS Assembly (Details in Table 6-1)						
Structure	1979.4	1979.4	0.0	100.0	0.0	0.0
Avionics	694.7	694.7	0.0	88.8	3.6	7.6
BAPS (Pivoting)	812.4	812.4	0.0	99.2	0.0	0.8
BAPS (Non-Pivoting)	293.6	293.6	0.0	100.0	0.0	0.0
Miscellaneous	694.2	694.2	0.0	100.0	0.0	0.0
EVA	165.3	165.3	0.0	93.6	0.0	6.4
ORU (incl. enclosure & handrail)	160.8	160.8	0.0	97.8	0.0	2.2
FSS Total	**4800.4**	**4800.4**	**0.0**	**98.0**	**0.5**	**1.5**
ORUC Assembly (Details in Table 7-1)						
Pallet	1452.6	1452.6	0.0	100.0	0.0	0.0
Avionics	46.2	46.2	0.0	100.0	0.0	0.0
EVA & CATs	367.0	447.8	+80.8	55.6	10.7	33.6
LIS (Unsprung)	970.3	970.3	0.0	100.0	0.0	0.0
LIS (Sprung mass)	410.0	410.0	0.0	100.0	0.0	0.0
Shelf	259.4	259.4	0.0	95.5	0.0	4.5
SOPE	283.0	283.0	0.0	100.0	0.0	0.0
ASIPE	960.9	960.9	0.0	100.0	0.0	0.0
FSIPE	621.1	602.7	-18.4	100.0	0.0	0.0
NPE	177.0	177.0	0.0	0.0	0.0	100.0
ATMs (1 and 2)	188.6	188.6	0.0	100.0	0.0	0.0
ORUs / ORIs / CATs	1560.2	1563.6	0.0	95.3	0.0	4.7
ORUC TOTAL	**7296.3**	**7362.1**	**+65.8**	**93.7**	**0.7**	**5.6**
SLIC Assembly (Details in Table 8-1)						
Pallet and Assoc Hardware	1871.9	1947.9	+76.0	0.0	93.1	6.9
WSIPE & MLI	689.7	689.7	0.0	0.0	96.6	3.4
Isolators	523.4	523.4	0.0	94.6	5.4	0.0
COPE	270.2	270.2	0.0	0.0	0.0	100.0
Avionics	177.0	177.0	0.0	0.0	0.0	100.0
EVA	123.9	253.7	+129.8	0.0	0.0	100.0
Miscellaneous	94.4	0.0	-94.4	0.0	0.0	100.0
ORUs	2720.8	2730.2	+9.4	37.1	55.8	7.1
SLIC TOTAL	**6471.3**	**6592.1**	**+120.8**	**22.9**	**61.1**	**16.0**
Crew Aids and Tools						
Middeck & TSA	179.2	193.7	14.5	23.0	54.2	22.8
Middeck CATs TOTAL	**179.2**	**193.7**	**+14.5**	**23.0**	**54.2**	**22.8**
SM4 Payload at Launch	**18747.2**	**18948.3**	**+201.1**	**69.4**	**22.2**	**8.4**

Figure 2-1. SM4 FSS (Launch Configuration, Aft View)

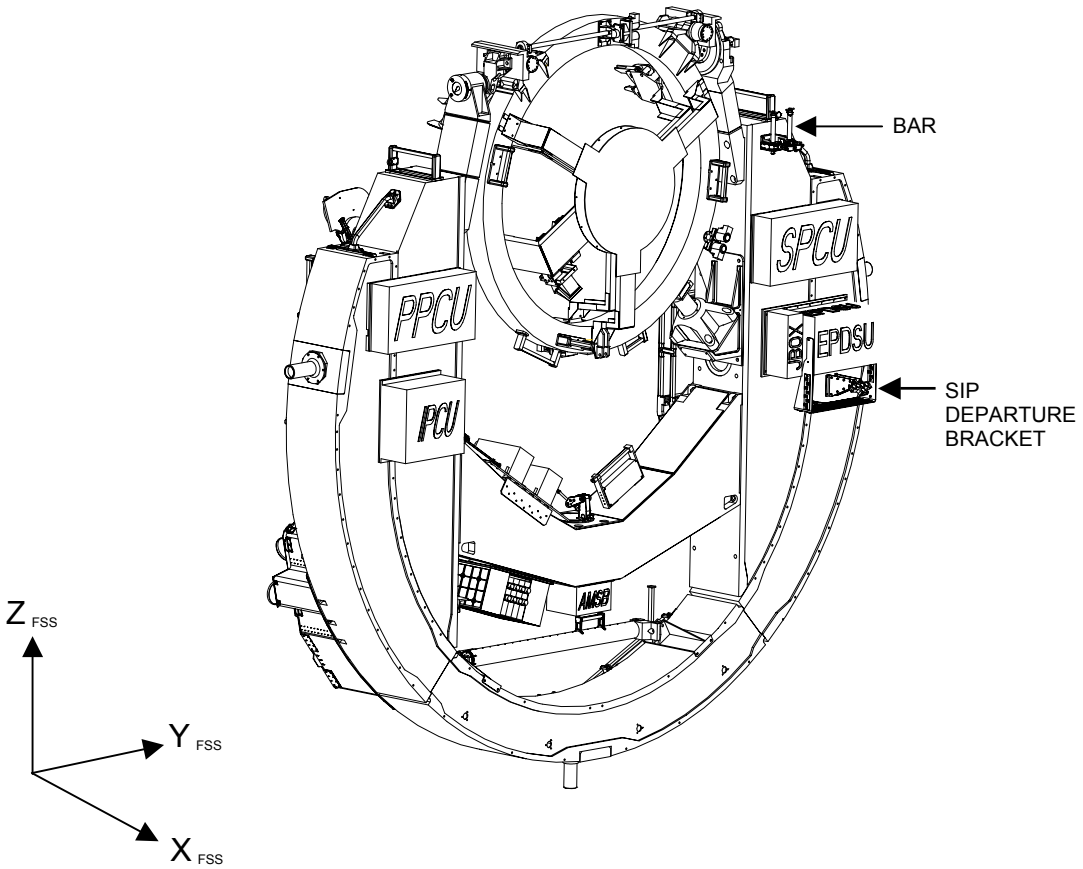

FSS origin with respect to Orbiter origin:

Xo = 1075.20
Yo = 0.0
Zo = 300.0

Figure 2-2. SM4 FSS (Launch Configuration, Forward View)

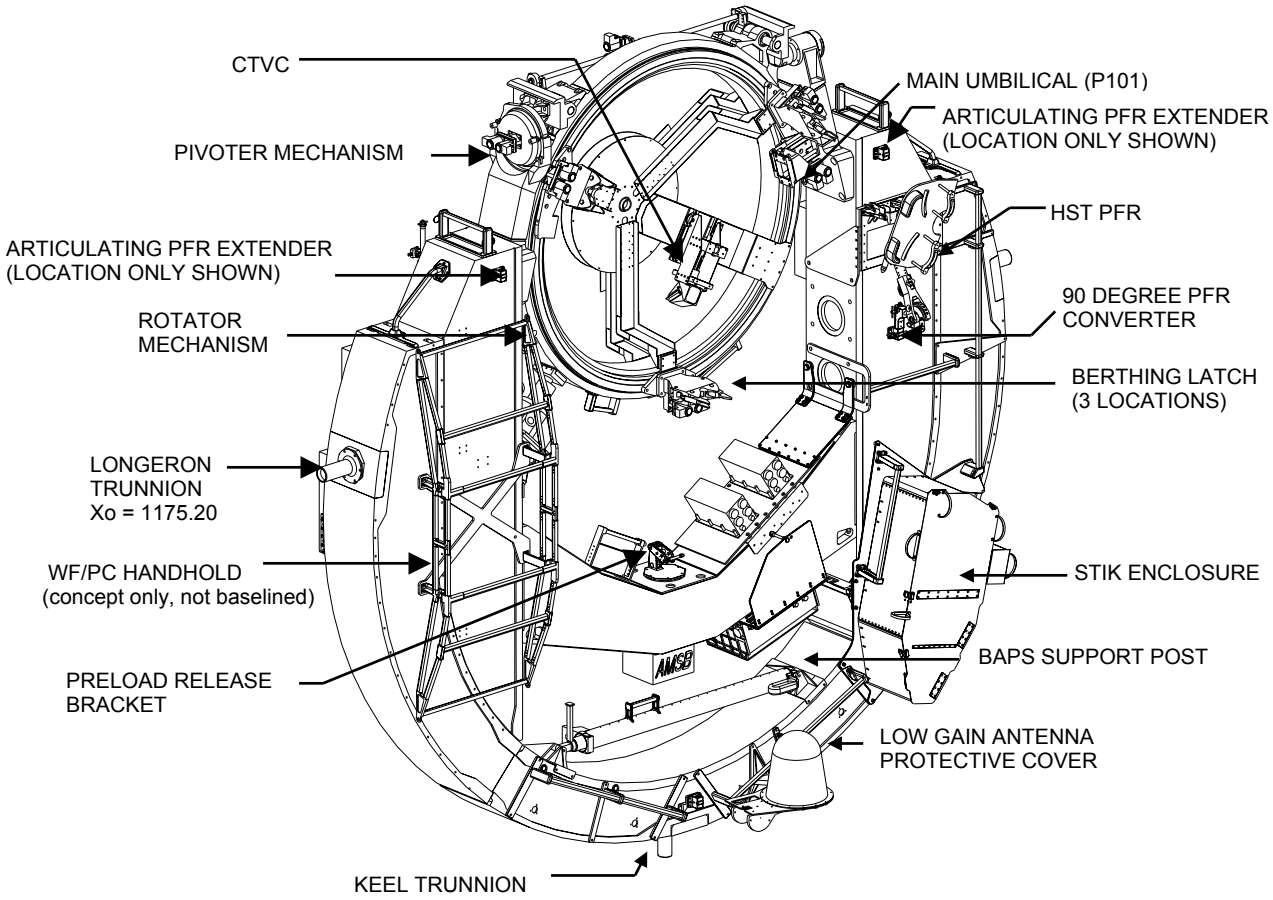

Figure 2-3. SM4 ORUC (Launch Configuration, Aft View)

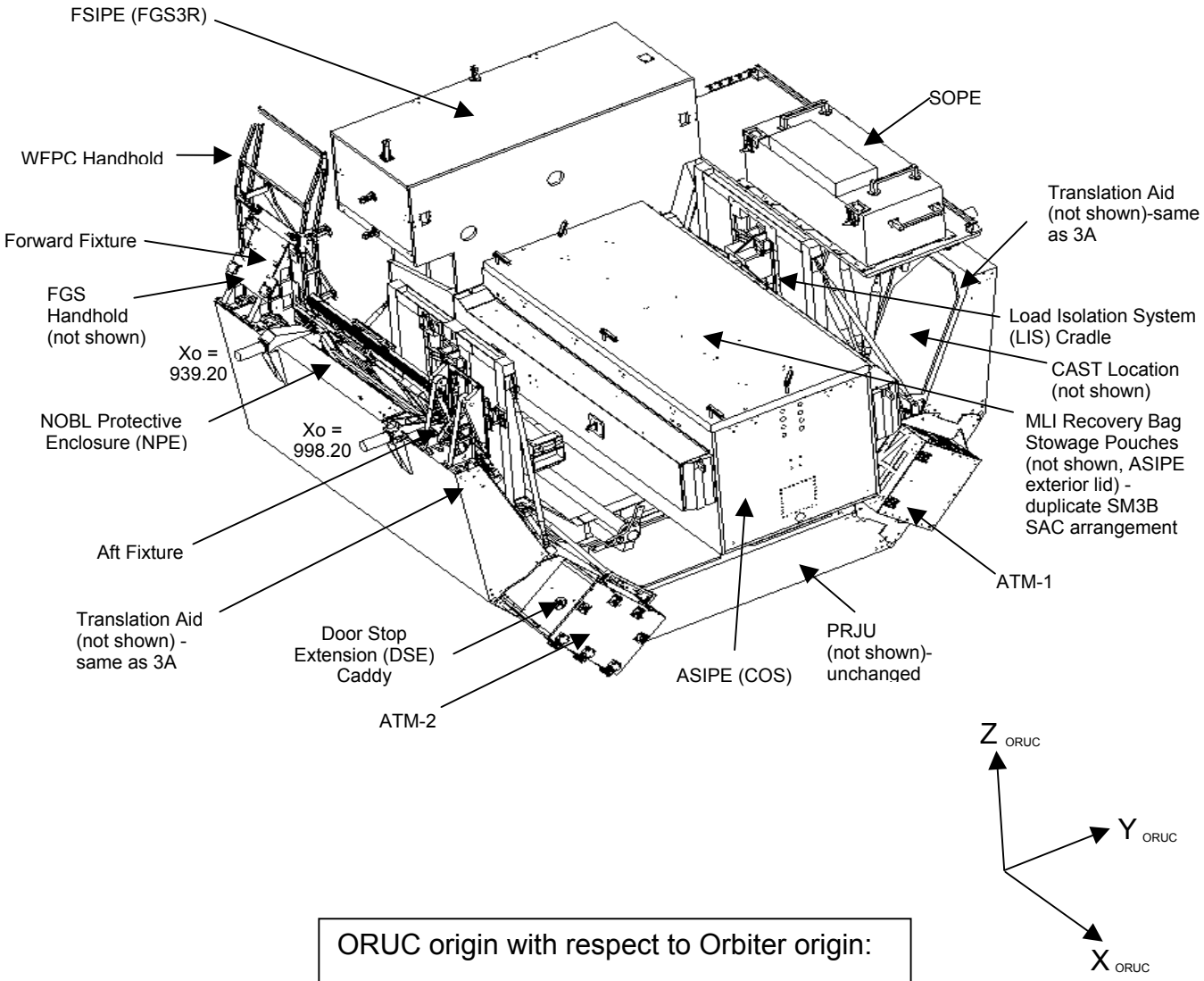

ORUC origin with respect to Orbiter origin:

Xo = 998.20
Yo = 0.0
Zo = 414.0

Figure 2-4. SM4 ORUC (Launch Configuration, Forward View)

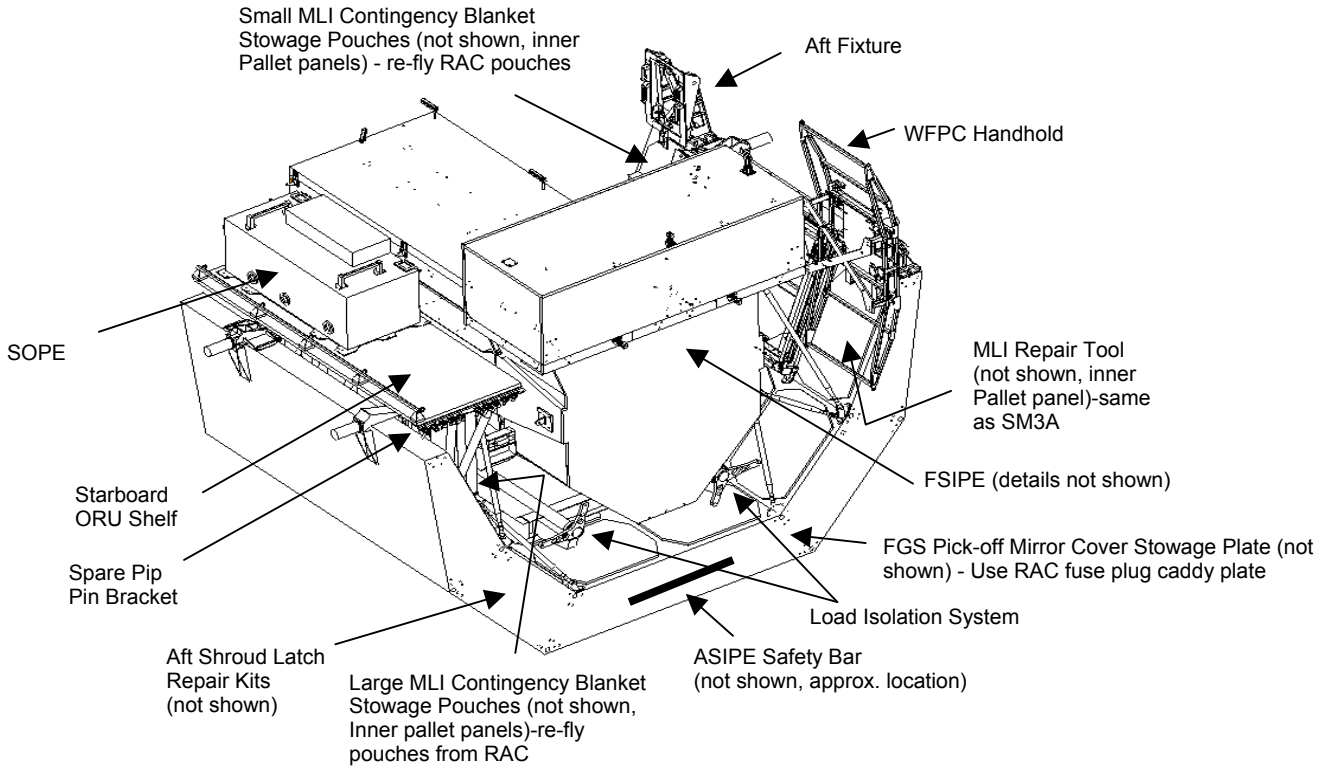

Figure 2-5. SM4 SLIC (Launch Configuration, Aft View)

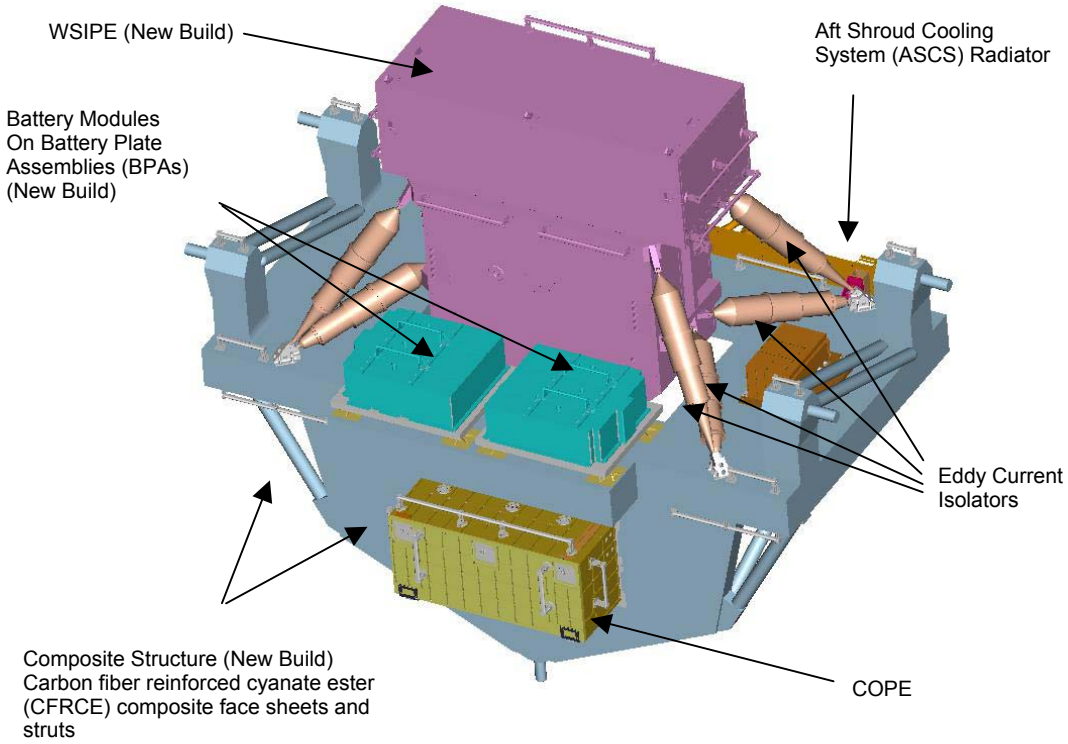

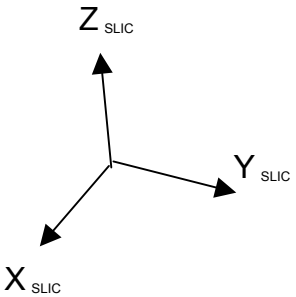

SLIC origin with respect to Orbiter origin:

Xo = 833.0
Yo = 0.0
Zo = 414.0

Figure 2-6. SM4 SLIC (Launch Configuration, Forward View

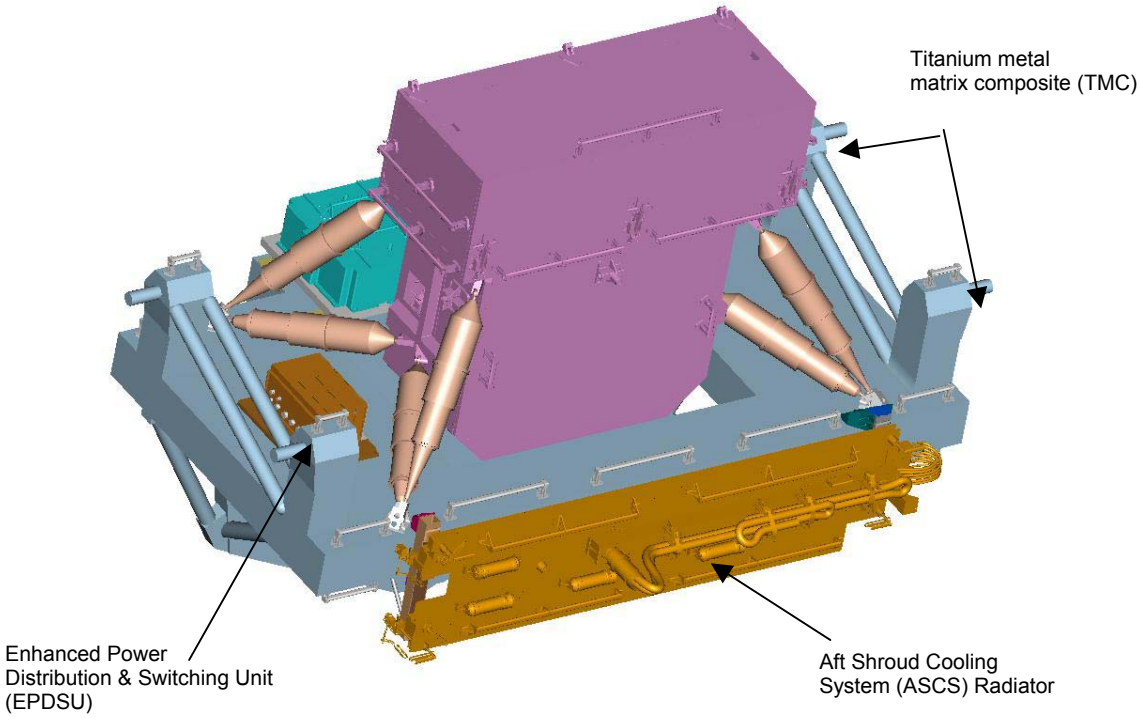

Figure 2-7. Axial SI Origins in HST Coordinates, Post SM4

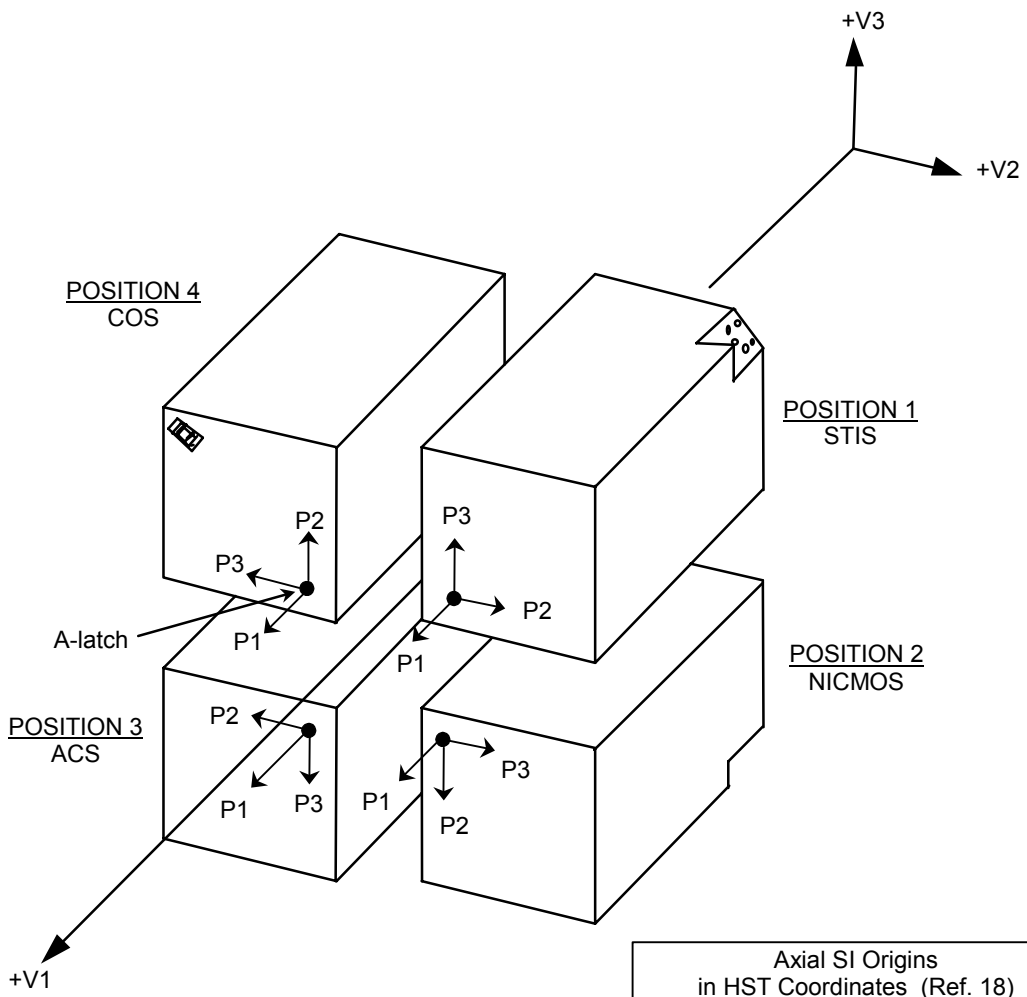

HST View Looking Aft
(Not to Scale)

Axial SI Origins in HST Coordinates (Ref. 18)			
SI	V1	V2	V3
POS 1	205.036	6.421	6.428
POS 2	205.031	6.421	-6.373
POS 3	205.027	-6.378	-6.372
POS 4	205.032	-6.378	6.427

Figure 2-8. Radial SI Origins in HST Coordinates, Post SM4

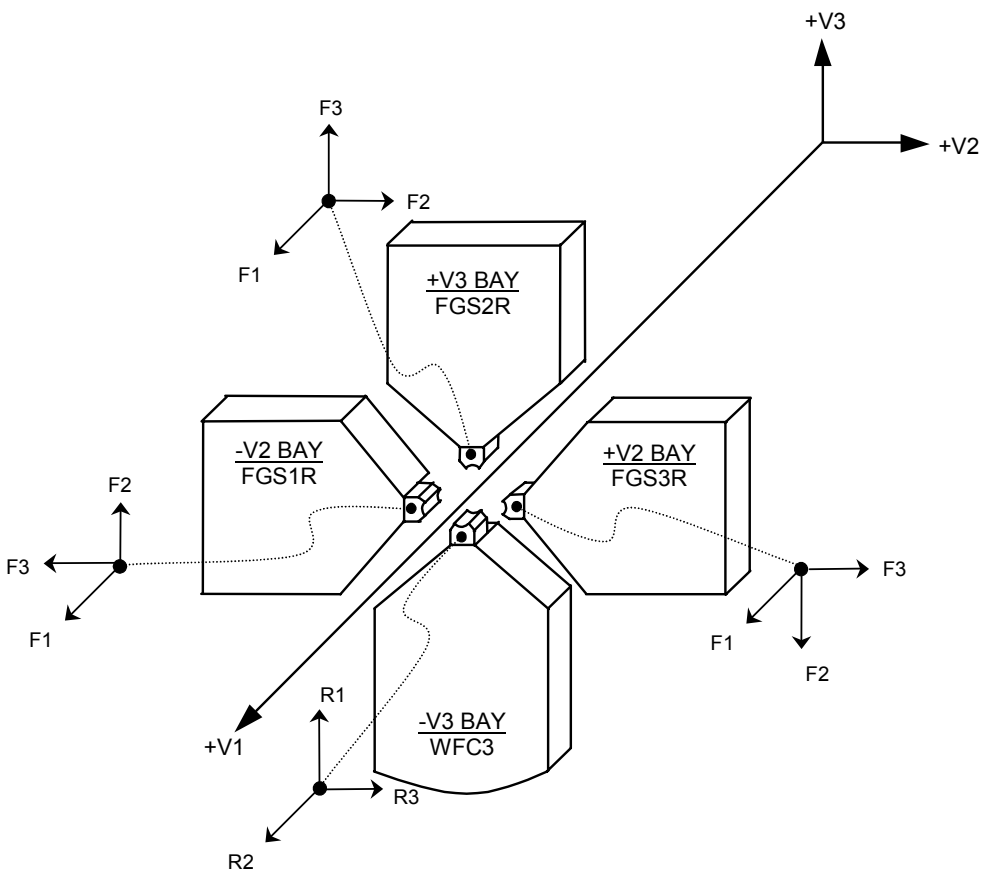

HST View Looking Aft
(Not to Scale)

Radial SI Origins in HST Coordinates (Ref. 18)				
Bay	SI	V1	V2	V3
-V2	FGS1	210.307	-12.599	0.003
+V3	FGS2	210.308	-0.001	12.600
+V2	FGS3	210.308	12.601	-0.001
-V3	WFC3	210.308	-0.003	-12.600

3 Center of Gravity / Mass Properties

The SM4 weight and center of gravity (CG) requirements will be base-lined in the PIP and ICD-A-14009-SM, paragraph 4.1.4.1. Orbiter performance predictions are the responsibility of Johnson Space Center (JSC) and are performed by the JSC Flight Design and Dynamics Group. The performance assessments utilize data contained herein.

4 SM4 Weight History

Table 4-1 and Figure 4-1 present SM4 weight history and is included to track weight changes as subsequent ST/SE-04 reports are released. SM4 weight history with respect to the PIP allocation limit from the initial release date to the present will be included in subsequent updates of the ST/SE-04.

Table 4-1. SM4 Weight History Table

Date	SE-04 Revision	SM4 Total	FSS	ORUC	SLIC	Middeck
10/21/02	-	19304	4834	7370	6854	246
1/22/03	A	19276	4800	7329	6901	246
5/22/03	B	18811	4800	7318	6513	180
8/18/03	C	18746	4800	7296	6471	179
11/24/03	D	18948	4800	7362	6592	194

Figure 4-1. SM4 Weight History Chart

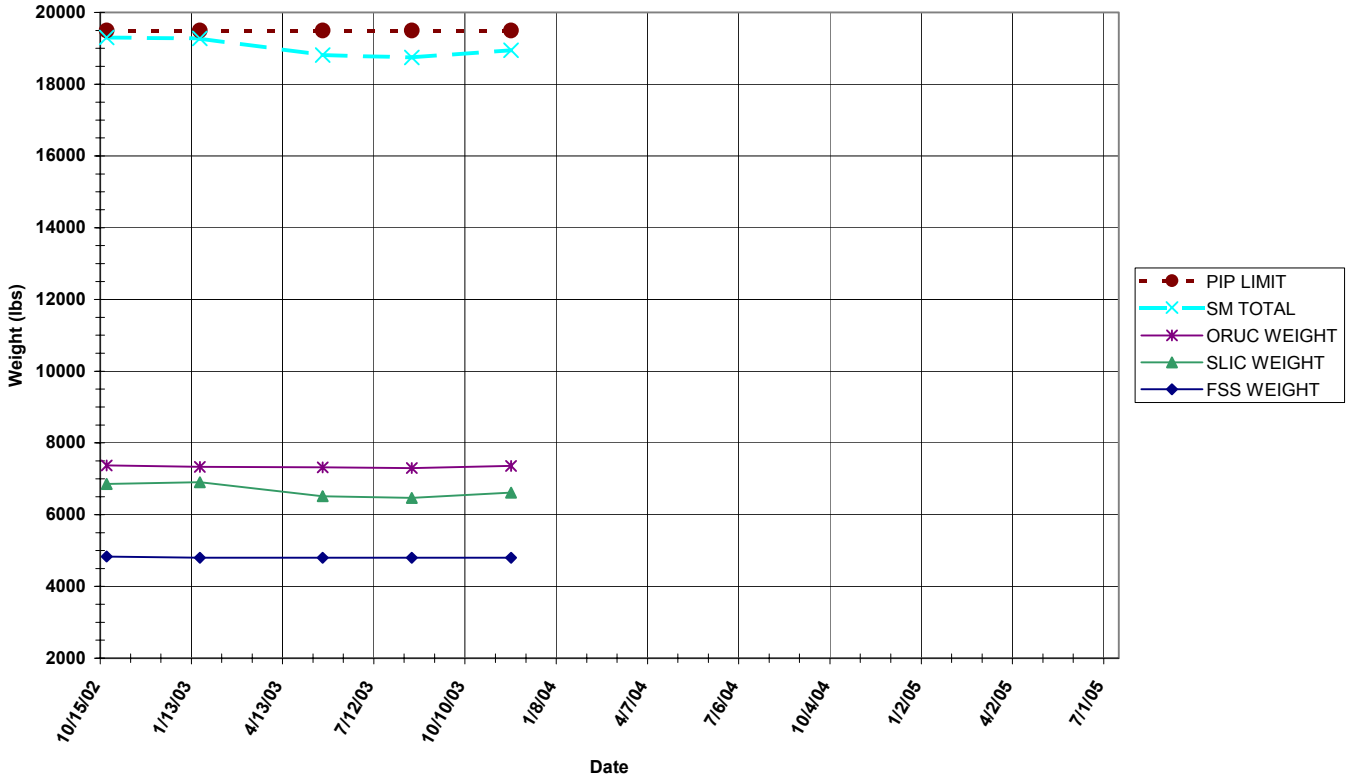

5 Shuttle Payload Data

Section 5 contains the mass property data required by PIP Annex 1 for compliance with control weight requirements (NSTS 14009, section 4.2), and to enable Space Shuttle mission performance planning relative to current payload weight.

The HST, FSS, ORUC and SLIC will have different weight and CG values after completion of the SM4 hardware change-out operations. The mass properties of the HST, FSS, ORUC and SLIC are updated in this section to reflect SM4 operational events from pre-launch through landing.

5.1 Weight Data

The composite payload weight breakdowns in Tables 6-1, 7-1 and 8-1 show the percentages of each individual element weight in terms of estimated, calculated, or actual. Tables 5-1 and 5-2 summarize the SM4 launch and landing weights, respectively.

Table 5-1. SM4 Launch Payload Weights

SM4 HARDWARE COMPONENT	HST PROJECT CONTROL WEIGHT	CURRENT WEIGHT	MARGIN (LBS.)
FSS	4850	4800	+50
ORUC	7400	7362	+38
SLIC	7000	6592	+408
MIDDECK AND TSA	250	194	+56
TOTAL	**19500**	**18948**	**+538**

Table 5-2. SM4 Landing Payload Weights

SM4 HARDWARE COMPONENT	HST PROJECT CONTROL WEIGHT	CURRENT WEIGHT	MARGIN (LBS.)
FSS	4850	4740	+110
ORUC	7400	7090	+310
SLIC	7000	5825	+1175
MIDDECK AND TSA	250	189	+61
TOTAL	**19500**	**17844**	**+1656**

5.1.1 Mass Properties Mission Sequence

PIP Annex 1 (ref. NSTS – 14009, Annex 1) requires mass property data from pre-launch through landing. Figure 5-1 shows the Orbiter Structure Reference System (OSRS) to HST Payload Axis System (PAS) coordinate reference system. The Berthing and Positioning System (BAPS) rotational positions for SM4 are shown in Figure 5-2. The payload mass properties data are referenced to the OSRS for ground handling at KSC, launch, HST berthing sequence, ORU/ORI change-out sequence, and landing. All mass properties are centroidal. Tables 5-3 through 5-26 (excluding 5-11, 5-16, 5-20 and 5-24) are in orbiter coordinates and are about the orbiter origin. Tables 5-11, 5-16, 5-20 and 5-24 are in HST coordinates. Figures 1-1 and 5-4 show the hardware configurations for launch/landing, berthing, and reboost. Tables 5-9 through 5-26 provide the weight, center of gravity, and inertia changes for the SI/ORU EVA change-out sequence (including unscheduled releases) per the HST SM4 EVA Timeline dated October 18, 2002 (Reference 19). The current change-out sequence is shown in the following table:

EVA DAY	SI / ORU CHANGE OUT	MASS PROPERTIES TABLE
1	• RSU Change-Out • DSC Installation • Unscheduled Release	5-9 5-10 5-11, 5-12
2	• COS / COSTAR Change-Out • NOBL 7, 8 Installation • NOBL 5 Installation • Unscheduled Release	5-13 5-14 5-15 5-16, 5-17
3	• WFPC II / WFC3 Change-Out • Battery Change-out • Unscheduled Release	5-18 5-19 5-20, 5-21
4	• ASCS Radiator Installation • STIK Installation • Unscheduled Release	5-22 5-23 5-24, 5-25
5	• FGS3 / FGS3R Change-Out • OCE EK Cable Connect	5-26
Unscheduled	N/A	N/A

5.1.2 Weight and Mass Properties Reporting

The SM4 Payload Weight Log will be documented in referenced reports for each carrier, SI, ORU, and CATS. These reports delineate a schedule of configuration changes and anticipated weight changes, and will be provided at the following milestones: upon delivery of the payload to the launch site, transfer of the payload to the integration facilities, transfer to the launch pad, and closeout of the Orbiter for flight.

5.1.3 Weight and Balance Test

Payload weight and balance tests will be witnessed and verified by an independent observer assigned to the GSFC HST Project Quality Assurance group.

5.1.4 Weight and Mass Properties Certification

The weight and mass properties certification will be documented as a part of the Flight Readiness Review process.

Figure 5-1. HST SM4 PAS Definition Origin, HST GFAS

FROM:	TO:		TO:			
GFS 1	**HST**		**ORBITER**			
X_{GFS1} =	-V3	-65.42	$-X_O$ =	+1083.78		
Y_{GFS1} =	V2	-46.20	$-Y_O$ =	- 46.20		
Z_{GFS1} =	V1	-358.0	Z_O =	-754.59		
GFS 2	**HST**		**ORBITER**			
X_{GFS2} =	-V3	-64.67	$-X_O$ =	+1084.53		
Y_{GFS2} =	V2	+45.8	$-Y_O$ =	+45.80		
Z_{GFS2} =	V1	-358.0	Z_O =	-754.59		
ORBITER	**HST**		**GFS 1**		**GFS 2**	
X_O =	V3	+1149.20	X_{GFS1} =	+1083.78	$-X_{GFS2}$	+1084.53
Y_O =	-V2		Y_{GFS1} =	-46.20	$-Y_{GFS2}$	+45.80
Z_O =	V1	+396.59	Z_{GFS1} =	+754.59	Z_{GFS2}	+754.59
HST	**ORBITER**		**GFS 1**		**GFS 2**	
V_1 =	Z_O	-396.59	Z_{GFS1} =	+358.0	Z_{GFS2}	+358.00
V_2 =	$-Y_O$		Y_{GFS1} =	+46.2	Y_{GFS2}	-45.80
V_3 =	X_O	-1149.20	$-X_{GFS1}$ =	-65.42	$-X_{GFS2}$	-64.67

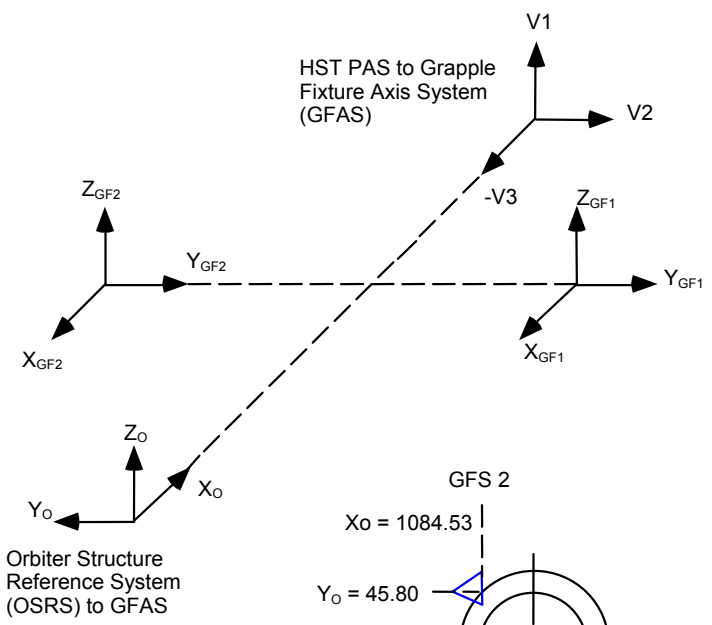

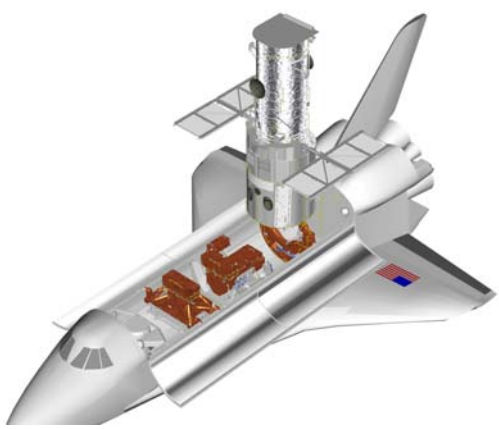

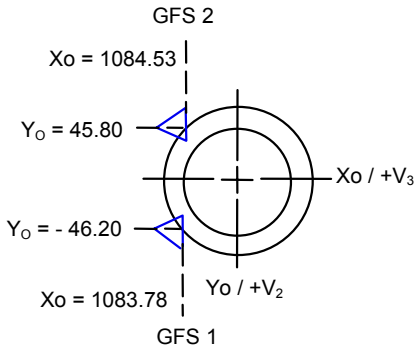

Looking towards –V1 direction

Figure 5-2. SM4 BAPS Rotational Positions

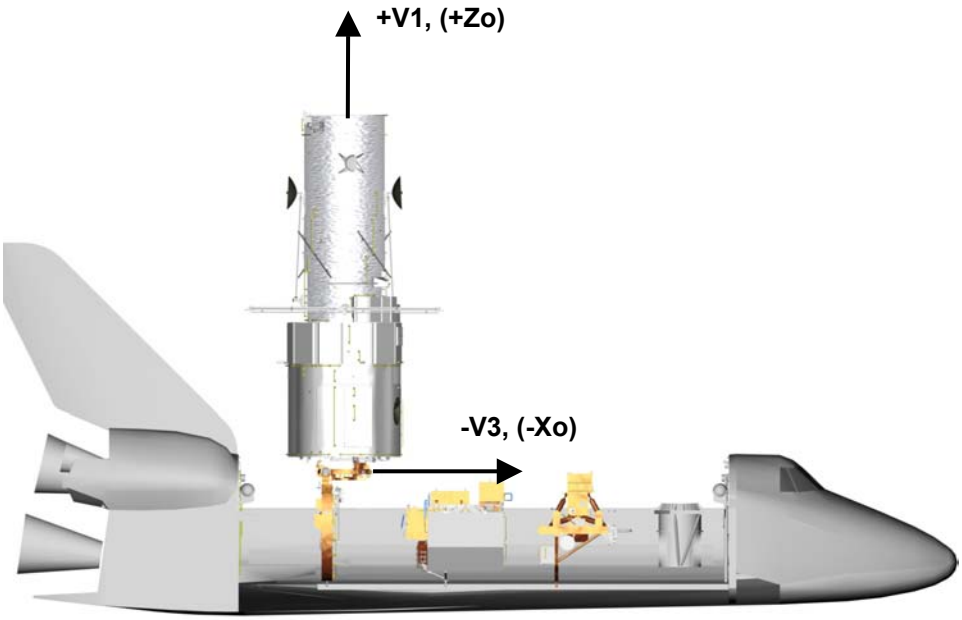

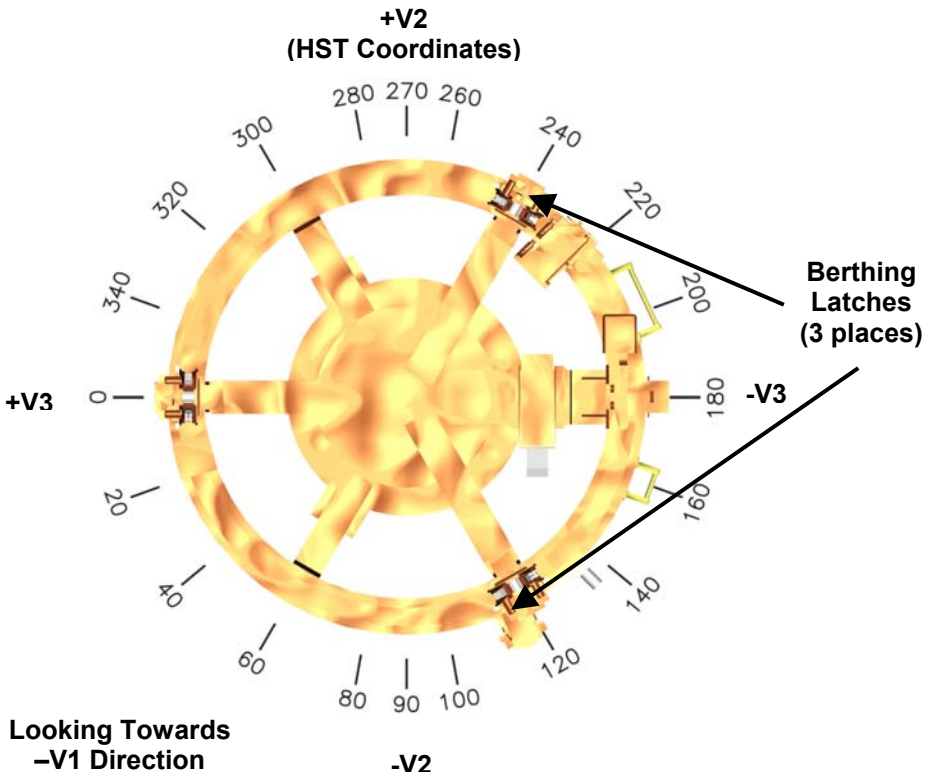

<u>-V2 Target</u>
COSTAR/COS Change-out
ASCS Installation

<u>-V3 Target</u>
RSU Change-out
DSC Installation
WFPC II/WFC3 Change-out
Battery Change-out
OCE-EK Connect

<u>+V2 Target</u>
STIK Installation
FGS Change-out

<u>+V3 Target</u>
NOBL 7, 8 Installation
NOBL 5 Installation

Table 5-3. SM4 Pre-Launch Mass Properties, Orbiter Coordinates

(Includes Non-Flight Ground Support Equipment)

SM4 HARDWARE COMPONENT	CURRENT WEIGHT (LBS.)	CENTER OF GRAVITY (INCHES)			MOMENT OF INERTIA (SLUG-FT2)			PRODUCT OF INERTIA (SLUG-FT2)		
		X	Y	Z	I_{XX}	I_{YY}	I_{ZZ}	I_{XY}	I_{XZ}	I_{YZ}
FSS + GSE	5034	1174.7	-1.2	400.9	4708	1932	2909	57	28	133
ORUC	7362	972.0	2.1	388.6	4349	3689	5162	73	-199	231
SLIC	6592	811.4	1.7	397.6	3634	2629	3782	-18	-228	9
MIDDECK + TSA	194	520.0	0.0	300.0	0	0	0	0	0	0
TOTAL PAYLOAD + GSE	19182	965.4	1.1	394.0	13184	98421	101547	-520	2068	354

Table 5-4. SM4 Launch Mass Properties (BAPS Vertical), Orbiter Coordinates

SM4 HARDWARE COMPONENT	CURRENT WEIGHT (LBS.)	CENTER OF GRAVITY (INCHES)			MOMENT OF INERTIA (SLUG-FT2)			PRODUCT OF INERTIA (SLUG-FT2)		
		X	Y	Z	I_{XX}	I_{YY}	I_{ZZ}	I_{XY}	I_{XZ}	I_{YZ}
FSS: BAPS VERTICAL	4800	1175.4	-1.3	400.4	4395	1907	2582	58	35	132
ORUC	7362	972.0	2.1	388.6	4349	3689	5162	73	-199	231
SLIC	6592	811.4	1.7	397.6	3634	2629	3782	-18	-228	9
MIDDECK + TSA	194	520.0	0.0	300.0	0	0	0	0	0	0
TOTAL PAYLOAD	18948	963.0	1.1	393.8	12862	96479	99311	-509	1904	355

Table 5-5. SM4 Pre-Berth Mass Properties (BAPS Horizontal), Orbiter Coordinates

SM4 HARDWARE COMPONENT	CURRENT WEIGHT (LBS.)	CENTER OF GRAVITY (INCHES)			MOMENT OF INERTIA (SLUG-FT2)			PRODUCT OF INERTIA (SLUG-FT2)		
		X	Y	Z	I_{XX}	I_{YY}	I_{ZZ}	I_{XY}	I_{XZ}	I_{YZ}
FSS: BAPS HORIZONTAL	4800	1170.9	-1.3	405.2	4863	2585	2792	45	-339	140
ORUC	7362	972.0	2.1	388.6	4349	3689	5162	73	-199	231
SLIC	6592	811.4	1.7	397.6	3634	2629	3782	-18	-228	9
MIDDECK + TSA	194	520.0	0.0	300.0	0	0	0	0	0	0
TOTAL PAYLOAD	18948	961.9	1.1	395.0	13414	95287	97568	-511	2535	350

Table 5-6. SM4 HST Pre-Change-out Mass Properties, Orbiter Coordinates

HST CONFIGURATION		CURRENT WEIGHT (LBS.)	CENTER OF GRAVITY (INCHES)			MOMENT OF INERTIA (SLUG-FT2)			PRODUCT OF INERTIA (SLUG-FT2)		
			X	Y	Z	I_{XX}	I_{YY}	I_{ZZ}	I_{XY}	I_{XZ}	I_{YZ}
SA3 @ 90°	HGA STOWED	25998	1142.1	-1.3	653.3	70358	64124	25492	362	1124	490
	HGA DEPLOYED	25998	1142.1	-1.3	652.5	68876	64114	26965	362	1082	487
SA3 @ 0°	HGA STOWED	25998	1142.0	-1.3	653.3	69219	64080	26586	331	1100	521
	HGA DEPLOYED	25998	1142.0	-1.3	652.4	67737	64071	28059	331	1059	517

NOTES: AD is closed. SA remains deployed. –V3 forward configuration.

90° orientation of solar array panels indicate that the panels are parallel with HST V1 axis.

0° orientation of solar array panels indicate that the panels are parallel with HST V3 axis.

Table 5-7. SM4 HST Berthed Pre-Change-out Mass Properties, Orbiter Coordinates

(HST -V3 FWD, SA3s AT 90°)

SM4 HARDWARE COMPONENT	CURRENT WEIGHT (LBS.)	CENTER OF GRAVITY (INCHES)			MOMENT OF INERTIA (SLUG-FT2)			PRODUCT OF INERTIA (SLUG-FT2)		
		X	Y	Z	I_{XX}	I_{YY}	I_{ZZ}	I_{XY}	I_{XZ}	I_{YZ}
HST BERTHED, SA3 @ 90°, HGA STOWED	25998	1142.1	-1.3	653.3	70358	64124	25492	362	1124	490
FSS: BAPS HORIZONTAL	4800	1170.9	-1.3	405.2	4863	2585	2792	45	-339	140
ORUC	7362	972.0	2.1	388.6	4349	3689	5162	73	-199	231
SLIC	6592	811.4	1.7	397.6	3634	2629	3782	-18	-228	9
MIDDECK + TSA	194	520.0	0.0	300.0	0	0	0	0	0	0
TOTAL PAYLOAD	44946	1066.1	-0.3	544.4	241626	394060	199880	-1153	113765	-599

Table 5-8. SM4 HST Berthed Pre-Change-out Mass Properties, Orbiter Coordinates

(HST -V3 FWD, SA3s AT 0°)

SM4 HARDWARE COMPONENT	CURRENT WEIGHT (LBS.)	CENTER OF GRAVITY (INCHES)			MOMENT OF INERTIA (SLUG-FT2)			PRODUCT OF INERTIA (SLUG-FT2)		
		X	Y	Z	I_{XX}	I_{YY}	I_{ZZ}	I_{XY}	I_{XZ}	I_{YZ}
HST BERTHED, SA3 @ 0°, HGA STOWED	25998	1142.0	-1.3	653.3	69219	64080	26586	331	1100	521
FSS: BAPS HORIZONTAL	4800	1170.9	-1.3	405.2	4863	2585	2792	45	-339	140
ORUC	7362	972.0	2.1	388.6	4349	3689	5162	73	-199	231
SLIC	6592	811.4	1.7	397.6	3634	2629	3782	-18	-228	9
MIDDECK + TSA	194	520.0	0.0	300.0	0	0	0	0	0	0
TOTAL PAYLOAD	44946	1066.1	-0.3	544.4	240418	393892	200920	-1184	113680	-568

Table 5-9. EVA Day 1 - Post RSU Change-out, Orbiter Coordinates

(HST –V3 FWD)

SM4 HARDWARE COMPONENT	CURRENT WEIGHT (LBS.)	CENTER OF GRAVITY (INCHES)			MOMENT OF INERTIA (SLUG-FT2)			PRODUCT OF INERTIA (SLUG-FT2)		
		X	Y	Z	I_{XX}	I_{YY}	I_{ZZ}	I_{XY}	I_{XZ}	I_{YZ}
HST BERTHED SA3 @ 0° HGA STOWED	25996	1142.0	-1.3	653.3	69218	64078	26584	331	1099	521
FSS: BAPS HORIZONTAL	4800	1170.9	-1.3	405.2	4863	2585	2792	45	-339	140
ORUC	7362	972.0	2.1	388.6	4348	3688	5161	73	-199	231
SLIC	6592	811.4	1.7	397.6	3634	2629	3782	-18	-228	9
MIDDECK + TSA	196	520.0	0.0	300.0	0	0	0	0	0	0
TOTAL PAYLOAD	44946	1066.1	-0.3	544.4	240438	394026	201031	-1184	113730	-568

Table 5-10. EVA Day 1 - Post DSC Installation, Orbiter Coordinates

(SA3s @ 90°, HST -V3 FWD)

SM4 HARDWARE COMPONENT	CURRENT WEIGHT (LBS.)	CENTER OF GRAVITY (INCHES)			MOMENT OF INERTIA (SLUG-FT2)			PRODUCT OF INERTIA (SLUG-FT2)		
		X	Y	Z	I_{XX}	I_{YY}	I_{ZZ}	I_{XY}	I_{XZ}	I_{YZ}
HST BERTHED SA3 @ 90° HGA STOWED	26013	1142.1	-1.2	653.4	70370	64132	25510	353	1119	495
FSS: BAPS HORIZONTAL	4800	1170.9	-1.3	405.2	4863	2585	2792	45	-339	140
ORUC	7343	972.0	1.9	388.5	4322	3679	5142	69	-202	218
SLIC	6592	811.4	1.7	397.6	3634	2629	3782	-18	-228	9
MIDDECK + TSA	198	520.0	0.0	300.0	0	0	0	0	0	0
TOTAL PAYLOAD	44946	1066.1	-0.3	544.5	241683	394376	200123	-1125	113864	-541

Table 5-11. Post EVA Day 1 - Unscheduled Release, HST Coordinates

(HST –V3 FWD)

HST CONFIGURATION	WEIGHT (LBS.)	CENTER OF GRAVITY (INCHES)			MOMENT OF INERTIA (SLUG-FT2)			PRODUCT OF INERTIA (SLUG-FT2)		
		V1	V2	V3	I_{V1}	I_{V2}	I_{V3}	I_{V1V2}	I_{V1V3}	I_{V2V3}
SA3s @ 90° HGAs DPLYD AD OPEN	26013	256.1	1.2	-6.8	27095	65235	69888	-493	1768	-353

Note: Emergency release configuration requires SAs @ 90°.

Table 5-12. Post EVA Day 1 - Unscheduled Release, Orbiter Coordinates

(HST –V3 FWD)

HST CONFIGURATION	WEIGHT (LBS.)	CENTER OF GRAVITY (INCHES)			MOMENT OF INERTIA (SLUG-FT2)			PRODUCT OF INERTIA (SLUG-FT2)		
		Xo	Yo	Zo	I_{Xo}	I_{Yo}	I_{Zo}	I_{XoYo}	I_{XoZo}	I_{YoZo}
SA3s @ 90° HGAs DPLYD AD OPEN	26013	1142.4	-1.2	652.7	69888	65236	27096	353	1769	493

Note: Emergency release configuration requires SAs @ 90°.

Table 5-13. EVA Day 2 - Post COS / COSTAR Change-out, Orbiter Coordinates

(HST –V2 FWD)

SM4 HARDWARE COMPONENT	CURRENT WEIGHT (LBS.)	CENTER OF GRAVITY (INCHES)			MOMENT OF INERTIA (SLUG-FT2)			PRODUCT OF INERTIA (SLUG-FT2)		
		X	Y	Z	I_{XX}	I_{YY}	I_{ZZ}	I_{XY}	I_{XZ}	I_{YZ}
HST BERTHED SA3s @ 0° HGA STOWED	26266	1150.2	-6.9	652.3	64836	71079	25582	-382	-367	972
FSS: BAPS HORIZONTAL	4800	1170.9	-1.3	405.2	4863	2585	2792	45	-339	140
ORUC	7089	971.2	2.0	388.2	4301	3606	5069	77	-209	216
SLIC	6592	811.4	1.7	397.6	3634	2629	3782	-18	-228	9
MIDDECK + TSA	198	520.0	0.0	300.0	0	0	0	0	0	0
TOTAL PAYLOAD	44946	1071.7	-3.6	545.4	234433	406587	207424	-4426	116751	-3507

Table 5-14. EVA Day 2 - Post NOBL 7 & 8 Installation, Orbiter Coordinates

(HST +V3 FWD)

SM4 HARDWARE COMPONENT	CURRENT WEIGHT (LBS.)	CENTER OF GRAVITY (INCHES)			MOMENT OF INERTIA (SLUG-FT2)			PRODUCT OF INERTIA (SLUG-FT2)		
		X	Y	Z	I_{XX}	I_{YY}	I_{ZZ}	I_{XY}	I_{XZ}	I_{YZ}
HST BERTHED -SA3s @ 0° HGA STOWED	26283	1156.0	1.0	652.3	71081	64866	25611	382	-976	-368
FSS: BAPS HORIZONTAL	4800	1170.9	-1.3	405.2	4863	2585	2792	45	-339	140
ORUC	7070	971.2	2.2	388.2	4284	3605	5053	75	-208	219
SLIC	6592	811.4	1.7	397.6	3634	2629	3782	-18	-228	9
MIDDECK + TSA	200	520.0	0.0	300.0	0	0	0	0	0	0
TOTAL PAYLOAD	44946	1075.2	1.1	545.5	240507	405743	212666	-163	119703	-77

Table 5-15. EVA Day 2 - Post NOBL 5 Installation, Orbiter Coordinates

(HST +V3 FWD)

SM4 HARDWARE COMPONENT	CURRENT WEIGHT (LBS.)	CENTER OF GRAVITY (INCHES)			MOMENT OF INERTIA (SLUG-FT2)			PRODUCT OF INERTIA (SLUG-FT2)		
		X	Y	Z	I_{XX}	I_{YY}	I_{ZZ}	I_{XY}	I_{XZ}	I_{YZ}
HST BERTHED -SA3s @ 0° HGA STOWED	26292	1156.0	1.1	652.3	71093	64866	25623	378	-976	-366
FSS: BAPS HORIZONTAL	4800	1170.9	-1.3	405.2	4863	2585	2792	45	-339	140
ORUC	7059	971.2	2.3	388.2	4275	3605	5044	74	-208	220
SLIC	6592	811.4	1.7	397.6	3634	2629	3782	-18	-228	9
MIDDECK + TSA	203	520.0	0.0	300.0	0	0	0	0	0	0
TOTAL PAYLOAD	44946	1075.2	1.1	545.5	240520	405893	212812	-170	119750	-80

Table 5-16. Post EVA Day 2 - Unscheduled Release, HST Coordinates

(HST +V3 FWD)

HST CONFIGURATION	WEIGHT (LBS.)	CENTER OF GRAVITY (INCHES)			MOMENT OF INERTIA (SLUG-FT2)			PRODUCT OF INERTIA (SLUG-FT2)		
		V1	V2	V3	I_{V1}	I_{V2}	I_{V3}	I_{V1V2}	I_{V1V3}	I_{V2V3}
SA3s @ 90° HGAs DPLYD AD OPEN	26292	255.2	1.0	-6.5	26115	66007	71742	-334	1651	-407

Note: Emergency release configuration requires SAs @ 90°.

Table 5-17. Post EVA Day 2 - Unscheduled Release, Orbiter Coordinates

(HST +V3 FWD)

HST CONFIGURATION	WEIGHT (LBS.)	CENTER OF GRAVITY (INCHES)			MOMENT OF INERTIA (SLUG-FT2)			PRODUCT OF INERTIA (SLUG-FT2)		
		Xo	Yo	Zo	I_{Xo}	I_{Yo}	I_{Zo}	I_{XoYo}	I_{XoZo}	I_{YoZo}
SA3s @ 90° HGAs DPLYD AD OPEN	26292	1142.7	-1.0	651.8	71742	66007	26117	407	1651	334

Note: Emergency release configuration requires SAs @ 90°.

Table 5-18. EVA Day 3 - Post WFPC II / WFC3 Change-out, Orbiter Coordinates

(HST –V3 FWD)

SM4 HARDWARE COMPONENT	CURRENT WEIGHT (LBS.)	CENTER OF GRAVITY (INCHES)			MOMENT OF INERTIA (SLUG-FT2)			PRODUCT OF INERTIA (SLUG-FT2)		
		X	Y	Z	I_{XX}	I_{YY}	I_{ZZ}	I_{XY}	I_{XZ}	I_{YZ}
HST BERTHED SA3s @ 0° HGA STOWED	26636	1141.6	-1.1	651.8	70085	65187	27024	356	1101	402
FSS: BAPS HORIZONTAL	4800	1170.9	-1.3	405.2	4863	2585	2792	45	-339	140
ORUC	7059	971.2	2.3	388.2	4275	3605	5044	74	-208	220
SLIC	6248	812.0	1.8	395.6	3181	2506	3766	-19	-198	12
MIDDECK + TSA	203	520.0	0.0	300.0	0	0	0	0	0	0
TOTAL PAYLOAD	44946	1069.3	-0.2	546.9	238418	387769	196538	-1087	111191	-606

Table 5-19. EVA Day 3 - Post Battery Change-out, Orbiter Coordinates

(HST -V3 FWD)

SM4 HARDWARE COMPONENT	CURRENT WEIGHT (LBS.)	CENTER OF GRAVITY (INCHES)			MOMENT OF INERTIA (SLUG-FT2)			PRODUCT OF INERTIA (SLUG-FT2)		
		X	Y	Z	I_{XX}	I_{YY}	I_{ZZ}	I_{XY}	I_{XZ}	I_{YZ}
HST BERTHED SA3s @ 0° HGA STOWED	26628	1141.6	-1.1	651.8	70084	65178	27014	356	1103	402
FSS: BAPS HORIZONTAL	4800	1170.9	-1.3	405.2	4863	2585	2792	45	-339	140
ORUC	7059	971.2	2.3	388.2	4275	3605	5044	74	-208	220
SLIC	6280	812.2	1.8	395.7	3182	2514	3774	-19	-196	12
MIDDECK + TSA	179	520.0	0.0	300.0	0	0	0	0	0	0
TOTAL PAYLOAD	44946	1069.5	-0.2	546.9	238220	386378	195346	-1087	110717	-606

Table 5-20. Post EVA Day 3 - Unscheduled Release, HST Coordinates

(HST –V3 FWD)

HST CONFIGURATION	WEIGHT (LBS.)	CENTER OF GRAVITY (INCHES)			MOMENT OF INERTIA (SLUG-FT2)			PRODUCT OF INERTIA (SLUG-FT2)		
		V1	V2	V3	I_{V1}	I_{V2}	I_{V3}	I_{V1V2}	I_{V1V3}	I_{V2V3}
SA3s @ 90° HGAs DPLYD AD OPEN	26628	254.6	1.1	-7.2	27509	66318	70729	-370	1776	-385

Note: Emergency release configuration requires SAs @ 90°.

Table 5-21. Post EVA Day 3 - Unscheduled Release, Orbiter Coordinates

(HST –V3 FWD)

HST CONFIGURATION	WEIGHT (LBS.)	CENTER OF GRAVITY (INCHES)			MOMENT OF INERTIA (SLUG-FT2)			PRODUCT OF INERTIA (SLUG-FT2)		
		Xo	Yo	Zo	I_{Xo}	I_{Yo}	I_{Zo}	I_{XoYo}	I_{XoZo}	I_{YoZo}
SA3s @ 90° HGAs DPLYD AD OPEN	26628	1142.0	-1.1	651.2	70730	66318	27509	385	1776	370

Note: Emergency release configuration requires SAs @ 90°.

Table 5-22. EVA Day 4 – Post ASCS Radiator Installation, Orbiter Coordinates

(HST -V2 FWD)

SM4 HARDWARE COMPONENT	CURRENT WEIGHT (LBS.)	CENTER OF GRAVITY (INCHES)			MOMENT OF INERTIA (SLUG-FT2)			PRODUCT OF INERTIA (SLUG-FT2)		
		X	Y	Z	I_{XX}	I_{YY}	I_{ZZ}	I_{XY}	I_{XZ}	I_{YZ}
HST BERTHED SA3s @ 0° HGA STOWED	27051	1143.4	-6.0	650.2	69122	68933	27597	-2512	1212	973
FSS: BAPS HORIZONTAL	4800	1170.9	-1.3	405.2	4863	2585	2792	45	-339	140
ORUC	7078	971.3	2.4	388.1	4287	3622	5066	87	-215	213
SLIC	5825	817.1	1.7	396.9	3035	2067	3246	-17	-299	12
MIDDECK + TSA	192	520.0	0.0	300.0	0	0	0	0	0	0
TOTAL PAYLOAD	44946	1074.3	-3.1	548.5	233907	379324	188475	-5886	107014	-2950

Table 5-23. EVA Day 4 – Post STIK Installation, Orbiter Coordinates

(HST +V2 FWD)

SM4 HARDWARE COMPONENT	CURRENT WEIGHT (LBS.)	CENTER OF GRAVITY (INCHES)			MOMENT OF INERTIA (SLUG-FT2)			PRODUCT OF INERTIA (SLUG-FT2)		
		X	Y	Z	I_{XX}	I_{YY}	I_{ZZ}	I_{XY}	I_{XZ}	I_{YZ}
HST BERTHED SA3s @ 0° HGA STOWED	27111	1149.0	8.3	649.9	66758	71791	27624	-82	-107	-1498
FSS: BAPS HORIZONTAL	4740	1171.0	-0.5	405.6	4791	2568	2736	39	-342	110
ORUC	7078	971.3	2.4	388.1	4287	3622	5066	87	-215	213
SLIC	5825	817.1	1.7	396.9	3035	2067	3246	-17	-299	12
MIDDECK + TSA	192	520.0	0.0	300.0	0	0	0	0	0	0
TOTAL PAYLOAD	44946	1077.6	5.5	548.6	230844	386114	192995	2464	109194	2874

Table 5-24. Post EVA Day 4 - Unscheduled Release, HST Coordinates

(HST +V2 FWD)

HST CONFIGURATION	WEIGHT (LBS.)	CENTER OF GRAVITY (INCHES)			MOMENT OF INERTIA (SLUG-FT2)			PRODUCT OF INERTIA (SLUG-FT2)		
		V1	V2	V3	I_{V1}	I_{V2}	I_{V3}	I_{V1V2}	I_{V1V3}	I_{V2V3}
SA3s @ 90° HGAs DPLYD AD OPEN	27111	252.8	0.2	-7.9	28122	67889	72424	137	2173	-110

Note: Emergency release configuration requires SAs @ 90°.

Table 5-25. Post EVA Day 4 - Unscheduled Release, Orbiter Coordinates

(HST +V2 FWD)

HST CONFIGURATION	WEIGHT (LBS.)	CENTER OF GRAVITY (INCHES)			MOMENT OF INERTIA (SLUG-FT2)			PRODUCT OF INERTIA (SLUG-FT2)		
		Xo	Yo	Zo	I_{Xo}	I_{Yo}	I_{Zo}	I_{XoYo}	I_{XoZo}	I_{YoZo}
SA3s @ 90° HGAs DPLYD AD OPEN	27111	1141.3	-0.2	649.4	72424	67889	28121	110	2173	-137

Note: Emergency release configuration requires SAs @ 90°.

Table 5-26. EVA Day 5 - Post FGS3 / FGS3R Change-out & OCE-EK Connect, Orbiter Coordinates

(HST +V2 FWD)

SM4 HARDWARE COMPONENT	CURRENT WEIGHT (LBS.)	CENTER OF GRAVITY (INCHES)			MOMENT OF INERTIA (SLUG-FT2)			PRODUCT OF INERTIA (SLUG-FT2)		
		X	Y	Z	I_{XX}	I_{YY}	I_{ZZ}	I_{XY}	I_{XZ}	I_{YZ}
HST BERTHED SA3s @ 0° HGA STOWED	27101	1149.1	8.3	650.0	66756	71779	27615	-83	-112	-1499
FSS: BAPS HORIZONTAL	4740	1171.0	-0.5	405.6	4791	2568	2736	39	-342	110
ORUC	7090	971.3	2.4	388.1	4290	3629	5072	88	-218	213
SLIC	5825	817.1	1.7	396.9	3035	2067	3246	-17	-299	12
MIDDECK + TSA	189	520.0	0.0	300.0	0	0	0	0	0	0
TOTAL PAYLOAD	44946	1077.6	5.5	548.6	230861	386044	192912	2465	109185	2876

Table 5-27. SM4 Landing Mass Properties, Orbiter Coordinates

SM4 HARDWARE COMPONENT	CURRENT WEIGHT (LBS.)	CENTER OF GRAVITY (INCHES)			MOMENT OF INERTIA (SLUG-FT2)			PRODUCT OF INERTIA (SLUG-FT2)		
		X	Y	Z	I_{XX}	I_{YY}	I_{ZZ}	I_{XY}	I_{XZ}	I_{YZ}
FSS: BAPS PIVOT	4740	1172.7	-0.5	402.3	4249	1934	2440	46	-150	113
ORUC	7090	971.3	2.4	388.1	4290	3629	5072	88	-218	213
SLIC	5825	817.1	1.7	396.9	3035	2067	3246	-17	-299	12
MIDDECK + TSA	189	520.0	0.0	300.0	0	0	0	0	0	0
TOTAL PAYLOAD	17845	969.6	1.4	393.8	12075	87841	90479	-313	2220	319

Note: Table reflects SM4 landing mass properties post scheduled EVA activities only.

5.2 Hubble Space Telescope

The mass properties for the Hubble Space Telescope SM3B (STS-109) and SM4 (STS-122, TBD) are contained in the following section.

5.2.1 Weight and Center of Gravity

The weight and center of gravity of the HST after release for SM3B, as reported in Reference 13, are found in Table 5-28 and Table 5-29 below. This data does not include the addition of the Bay 6 NOBL, the Aft Shroud Latch Repair (ASLR) or the Door Stop Extensions (DSEs) installed during SM3B. The mass properties also do not include the depletion of the NICMOS cryogen, which is 238 lb, per Reference 14. Tables 5-28 and 5-29 are included for traceability only, and should not be used for any calculations.

Table 5-28. HST Deployed Mass Properties Data (Post SM3B) - Incorrect

HST CONFIGURATION	WEIGHT (lbs)	C.G. (inches)			MOMENT OF INERTIA (slug-ft^2)			PRODUCT OF INERTIA (slug-ft^2)		
		V1	V2	V3	I_{V1}	I_{V2}	I_{V3}	I_{V1V2}	I_{V1V3}	I_{V2V3}
HGA DEPLOYED, SA3 @ 90°	26222	255.9	1.4	-7.3	25488	64531	70983	-599	1151	-349
HGA DEPLOYED, SA3 @ 0°	26222	255.2	1.4	-7.0	28173	65628	69190	-596	1799	-348

Note: Mass properties reflect a HST configuration with the Aperture Door open.

Table 5-29. HST Deployed Mass Properties Data (Post SM3B) – Metric - Incorrect

HST CONFIGURATION	WEIGHT (kg)	C.G. (meters)			MOMENT OF INERTIA (kg-m^2)			PRODUCT OF INERTIA (kg-m^2)		
		V1	V2	V3	I_{V1}	I_{V2}	I_{V3}	I_{V1V2}	I_{V1V3}	I_{V2V3}
HGA DEPLOYED, SA3 @ 90°	11894	6.5	0.0	-0.2	34557	87491	96240	-812	1560	-474
HGA DEPLOYED, SA3 @ 0°	11894	6.5	0.0	-0.2	38197	88979	93808	-808	2440	-472

Note: Mass properties reflect a HST configuration with the Aperture Door open.

The corrected SM3B data, including the Bay 6 NOBL, ALSR, DSEs and the 238 lb depletion of the NICMOS cryogen (Reference 14), is included in Tables 5-30 and 5-31.

Table 5-30. HST Deployed Mass Properties Data (Post SM3B) - Corrected

HST CONFIGURATION	WEIGHT (lbs)	C.G. (inches)			MOMENT OF INERTIA (slug-ft^2)			PRODUCT OF INERTIA (slug-ft^2)		
		V1	V2	V3	I_{V1}	I_{V2}	I_{V3}	I_{V1V2}	I_{V1V3}	I_{V2V3}
HGA DEPLOYED, SA3 @ 90°	25998	256.1	1.3	-6.8	27077	65226	69876	-488	1773	-362
HGA DEPLOYED, SA3 @ 0°	25998	256.0	1.3	-6.9	28171	65182	68736	-518	1749	-331

Note: Mass properties reflect a HST configuration with the Aperture Door open.

Table 5-31. HST Deployed Mass Properties Data (Post SM3B) – Metric - Corrected

HST CONFIGURATION	WEIGHT (kg)	C.G. (meters)			MOMENT OF INERTIA (kg-m^2)			PRODUCT OF INERTIA (kg-m^2)		
		V1	V2	V3	I_{V1}	I_{V2}	I_{V3}	I_{V1V2}	I_{V1V3}	I_{V2V3}
HGA DEPLOYED, SA3 @ 90°	11792	6.5	0.0	-0.2	36711	88435	94738	-662	2404	-491
HGA DEPLOYED, SA3 @ 0°	11792	6.5	0.0	-0.2	38194	88374	93194	-703	2372	-449

Note: Mass properties reflect a HST configuration with the Aperture Door open.

The projected weight and center of gravity of the HST after SM4, is found in Table 5-32 and Table 5-33 below.

Table 5-32. HST Deployed Mass Properties Data (Post SM4)

HST CONFIGURATION	WEIGHT (lbs)	C.G. (inches)			MOMENT OF INERTIA (slug-ft^2)			PRODUCT OF INERTIA (slug-ft^2)		
		V1	V2	V3	I_{V1}	I_{V2}	I_{V3}	I_{V1V2}	I_{V1V3}	I_{V2V3}
HGA DEPLOYED, SA3 @ 90°	27101	252.7	0.2	-8.0	29206	67838	71272	111	2148	-79
HGA DEPLOYED, SA3 @ 0°	27101	252.8	0.2	-7.9	28113	67886	72413	142	2173	-110

Note: Mass properties reflect a HST configuration with the Aperture Door open.

Table 5-33. HST Deployed Mass Properties Data (Post SM4) - Metric

HST CONFIGURATION	WEIGHT (kg)	C.G. (meters)			MOMENT OF INERTIA (kg-m^2)			PRODUCT OF INERTIA (kg-m^2)		
		V1	V2	V3	I_{V1}	I_{V2}	I_{V3}	I_{V1V2}	I_{V1V3}	I_{V2V3}
HGA DEPLOYED, SA3 @ 90°	12293	6.4	0.0	-0.2	38116	92040	98179	192	2948	-152
HGA DEPLOYED, SA3 @ 0°	12293	6.4	0.0	-0.2	39598	91976	96632	150	2914	-110

Note: Mass properties reflect a HST configuration with the Aperture Door open.

5.2.2 HST Transformation Matrices

The Post SM3B transformation matrices defining the orientation of the HST principal axis (PA) relative to the HST geometric axis (GA) system for the fully deployed configuration with SA Wings at 0 degrees and 90 degrees are listed in Table 5-34. These values do include the addition of the Bay 6 NOBL, ASLR, DSEs and the removal of the cryogen.

Table 5-34. Post SM3B Direction Cosines - Corrected

SA3s DEPLOYED 0°			SA3s DEPLOYED 90°		
0.9955718	-0.0842221	-0.0417581	0.9965924	-0.0719247	-0.0403837
0.0835360	0.9963440	-0.0179138	0.0713260	0.9973238	-0.0160782
0.0431142	0.0143462	0.9989674	0.0414320	0.0131430	0.9990552

The Post SM4 transformation matrices defining the orientation of the HST PA relative to the HST GA system for the fully deployed configuration with SA Wings at 0 degrees and 90 degrees are listed in Table 5-35.

Table 5-35. Post SM4 Direction Cosines

SA3s DEPLOYED 0°			SA3s DEPLOYED 90°		
0.9987028	0.0027481	0.0508469	0.9987998	0.0034092	0.0488635
-0.0015257	0.9997094	-0.0240649	-0.0021694	0.9996752	-0.0254028
-0.0508982	0.0239561	0.9984168	-0.0489343	0.0252663	0.9984826

The transformation matrix defining the orientation of the grapple fixture (GF) axis system relative to the HST geometric axis system is as follows:

$$\begin{vmatrix} X \\ Y \\ Z \end{vmatrix}_{GF} = \begin{vmatrix} 0 & 0 & -1 \\ 0 & 1 & 0 \\ 1 & 0 & 0 \end{vmatrix} \cdot \begin{vmatrix} VI \\ V2 \\ V3 \end{vmatrix}_{GA}$$

The vector X_{GF}, Y_{GF}, Z_{GF} from the origin of the HST axis system to the origin of the grapple fixture axis system expressed in HST coordinates is: VI = 358.0 in., V2 = 46.2 in., V3 = -65.42 in. The vector X_{GF}, Y_{GF}, Z_{GF} from the origin of the HST axis system to the origin of the grapple fixture axis system expressed in HST coordinates is: VI = 358.0 in., V2 = -45.80 in., V3 = -64.67 in.

Figure 5-3. HST Coordinate Axis System

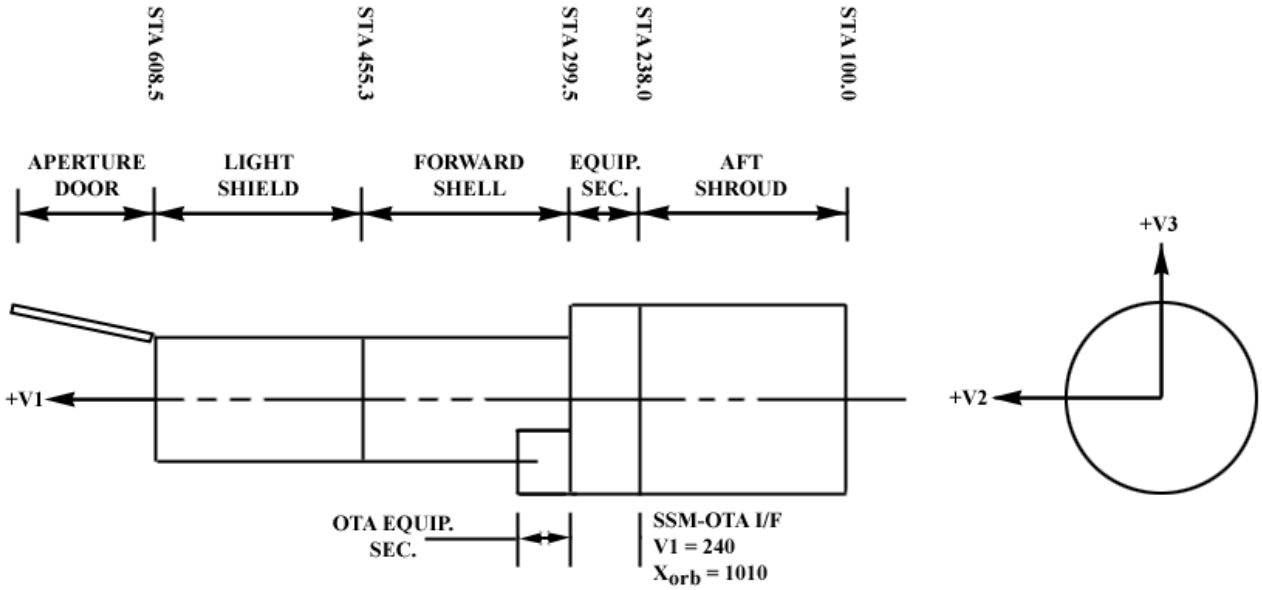

WHEN STOWED IN THE ORBITER, THE RELATION BETWEEN HST COORDINATES AND ORBITER COORDINATES IS:

$X_{orb} = 1250 - V1$

$Y_{orb} = +V2$

$Z_{orb} = 400 - V3$

5.3 Payload Physical Function Data

These data are provided to support the following: Payload retrieval by the Orbiter, special handling by the payload deployment and retrieval system (PDRS), functions performed onboard the Orbiter that could perturb or endanger the Orbiter, or the Space Shuttle Program (SSP) for crew simulator training to perform specific payload functions.

5.3.1 Payload Deployment and Retrieval System Data

The following payload data are required when using the PDRS:

5.3.1.1 Reference Frame

a. Mass properties and structural characteristics are referenced to the PAS. The location of the PAS origin and its orientation with respect to the payload structure are dimensionally depicted in Figure 5-1.

The position and orientation of the PAS when HST is berthed in the Orbiter cargo bay is defined with respect to the OSRS. The location of the origin of the PAS expressed in Orbiter Structural Reference System (OSRS) coordinates is as follows:

HST	V1	=	Z	-396.59
(On BAPS horiz.)	V2	=	-Y	
	$V3_{PAS}$	=	X_{OSRS}	-1149.20
ORUC	X	=	X	
	Y	=	Y	
	Z_{PAS}	=	Z_{OSRS}	
SLIC	X	=	X	
	Y	=	Y	
	Z_{PAS}	=	Z_{OSRS}	

Figure 5-4. HST Cargo Elements and Orbiter Coordinate Axis System

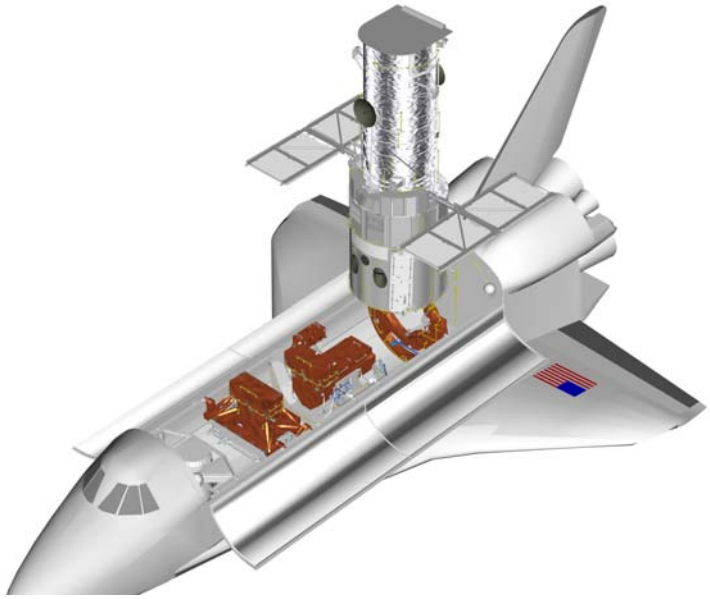

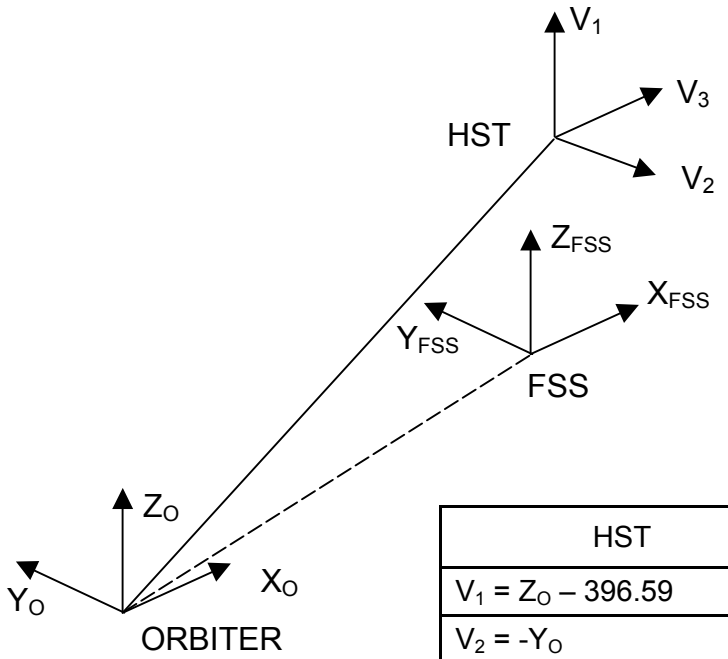

HST	FSS (Origin)
$V_1 = Z_O – 396.59$	$X_{FSS} = X_O – 1075.2$
$V_2 = -Y_O$	$Y_{FSS} = Y_O$
$V_3 = X_O – 1149.20$	$Z_{FSS} = Z_O – 300.0$
HST Origin – Berthed	
$V_1 = 0$ $X_O = 1149.20,$	$X_{FSS} = 74.00$
$V_2 = 0$ at $Y_O = 0.00,$	$Y_{FSS} = 0.00$
$V_3 = 0$ $Z_O = 396.59,$	$Z_{FSS} = 96.59$

The transformation matrix defining the orientation of the PAS with respect to the OSRS is as follows:

HST	V1		0	0	1	X	
(On BAPS)	V2	=	0	-1	0	Y	
	$V3_{PAS}$		1	0	0	Z_{OSRS}	
ORUC	X		1	0	0	X	
	Y	=	0	1	0	Y	
	Z_{ORUC}		0	0	1	Z_{OSRS}	
SLIC	X		1	0	0	X	
	Y	=	0	1	0	Y	
	Z_{SLIC}		0	0	1	Z_{OSRS}	

b. The Grapple Fixture Axis System (GFAS) defines the position and orientation of the Grapple Fixtures (GFs) mounted to the payload structure. The origin of the GFAS is located at the base of the grapple pin as depicted in Reference 8, Figure 3-2.

The location of the origin of the GFAS expressed in PAS coordinates is as follows:

HST port side:

X	=	0		X	=	358.0 in.
Y	=	0	at	Y	=	-45.8 in.
Z_{GFAS}	=	0		Z_{PAS}	=	64.67 in.

HST stbd side:

X	=	0		X	=	358.0 in.
Y	=	0	at	Y	=	46.2 in.
Z_{GFAS}	=	0		Z_{PAS}	=	65.42 in.

The transformation matrix defining the orientation of the GFAS with respect to the PAS is as follows:

HST port	X		0	0	-1	V1	
	Y	=	0	1	0	V2	
	Z_{GFAS}		1	0	0	$V3_{PAS}$	
HST stbd	X		0	0	-1	V1	
	Y	=	0	1	0	V2	
	Z_{GFAS}		1	0	0	$V3_{PAS}$	

c. The position and orientation of the FSS Axis System (FSSAS) in the Orbiter cargo bay are defined with respect to the OSRS. The location of the FSSAS origin expressed in OSRS coordinates is as follows:

X	=	0		X	=	1075.2 in.
Y	=	0	at	Y	=	0.0 in.
Z_{FSSAS}	=	0		Z_{OSRS}	=	300.0 in.

The transformation matrix defining the orientation of the FSSAS with respect to the OSRS is as follows:

$$\begin{matrix} X \\ Y \\ Z_{FSSAS} \end{matrix} = \left| \begin{matrix} 1 & 0 & 0 \\ 0 & 1 & 0 \\ 0 & 0 & 1 \end{matrix} \right| \begin{matrix} X \\ Y \\ Z_{OSRS} \end{matrix}$$

d. The position and orientation of the HST PAS when docked upon the FSS are defined with respect to the FSSAS when the FSS adapter ring is in the pre-docking position. The location of the HST PAS origin expressed in FSSAS coordinated is as follows:

V1	=	0		X	=	74.0 in.
V2	=	0	At	Y	=	0.0 in.
$V3_{PAS}$	=	0		Z_{FSSAS}	=	96.59 in.

The transformation matrix defining the orientation of the HST PAS with respect to the FSSAS is as follows:

$$\begin{matrix} V1 \\ V2 \\ V3_{PAS} \end{matrix} = \left| \begin{matrix} 0 & 0 & 1 \\ 0 & -1 & 0 \\ 1 & 0 & 0 \end{matrix} \right| \begin{matrix} X \\ Y \\ Z_{FSSAS} \end{matrix}$$

5.3.2 Mass Properties

Table 5-36 was added to reflect the changes made to the SM3B Report data: addition of the Bay 6 NOBL, ASLR, DSEs and the removal of the NICMOS cryogen.

Table 5-37 provides the current mass properties for all ORU/ORI scheduled and contingency change-out hardware with respect to the HST coordinate system. Table 5-38 provides the mass properties for hardware flown on the FSS. Table 5-39 includes ORUC hardware. Table 5-40 lists the mass properties of the SLIC hardware and Table 5-41 lists the hardware flown on the Middeck.

Table 5-36. Modifications to HST Mass Properties from SM3B Report

SM4 HARDWARE COMPONENT	INSTLD ON HST	RMVD FROM HST	CURRENT WEIGHT [1] (LBS)	CENTER OF GRAVITY (INCHES)			MOMENT OF INERTIA (SLUG-FT2)			PRODUCT OF INERTIA (SLUG-FT2)		
				V1	V2	V3	I_{V1}	I_{V2}	I_{V3}	I_{V1V2}	I_{V1V3}	I_{V2V3}
SM3B MASS PROPS (from Ref. 13, Table 5-24 & Table 5-28 of this report)												
HST – SM3B (HGA DEPLOYED, SA3 @ 0°)			26222	255.2	1.4	-7.0	28173	65628	69190	-596	1799	-348
CHANGES												
ADD BAY 6 NOBL & ASLR												
Bay 6 NOBL	X		10.0	269.5	58.0	58.0	0.0	0.0	0.0	0.0	0.0	0.0
ASLR	X		2.0	178.8	84.0	0	0.0	0.0	0.0	0.0	0.0	0.0
REMOVE 238 lb OF CRYOGEN FROM NICMOS												
NICMOS cryogen (Ref. 14 & 17)		X	238.0	161.61	18.17	-18.12	2.3	6.3	6.3	0.0	0.0	0.0
ADD DSEs												
+V2 DSE	X		0.9	110.0	72.7	-42.0	0.0	0.0	0.0	0.0	0.0	0.0
-V3 DSE	X		0.7	110.0	42.0	-72.7	0.0	0.0	0.0	0.0	0.0	0.0
PRE-SM4 MASS PROPS (for Table 5-30)												
HST – SM4 initial mass props (SA3 @ 0°)			25998	256.0	1.3	-6.9	28171	65182	68736	-518	1749	-331

[1] Weight includes contingency.

Table 5-37. Scheduled ORUs / ORIs in HST Coordinates

SM4 HARDWARE COMPONENT	INSTLD ON HST	RMVD FROM HST	CURRENT WEIGHT [1] (LBS)	CENTER OF GRAVITY (INCHES)			MOMENT OF INERTIA (SLUG-FT2)			PRODUCT OF INERTIA (SLUG-FT2)		
				V1	V2	V3	I_{V1}	I_{V2}	I_{V3}	I_{V1V2}	I_{V1V3}	I_{V2V3}
EVA DAY 1												
EVENT 1 - RSU CHANGE-OUT												
RSU1		X	24.3	192.9	30.6	-51.4	4.5	4.2	4.2	0.0	0.0	0.0
RSU1R	X		23.9	192.9	30.6	-51.4	4.5	4.2	4.2	0.0	0.0	0.0
RSU2		X	24.3	192.9	-27.0	-52.2	4.5	4.2	4.2	0.0	0.0	0.0
RSU2R	X		23.9	192.9	-27.0	-52.2	4.5	4.2	4.2	0.0	0.0	0.0
RSU3		X	24.3	192.9	-44.0	-51.8	4.5	4.2	4.2	0.0	0.0	0.0
RSU3R	X		23.9	192.9	-44.0	-51.8	4.5	4.2	4.2	0.0	0.0	0.0
EVENT 2 - DSC INSTALLATION												
DSC	X		16.5	280.7	-55.1	-55.1	0.0	0.0	0.0	0.0	0.0	0.0
EVA DAY 2												
EVENT 3 - COSTAR/COS CHANGE-OUT												
COSTAR		X	659.3	165.8	-17.3	17.7	28.0	101.0	91.0	0.0	0.0	0.0
COS (Ref. 16)	X		906.7	161.5	-18.4	17.7	41.4	168.4	169.3	0.2	-4.5	1.5
COS Thermal Joint Cover	X		5.9	161.5	-18.4	17.7	0.0	0.0	0.0	0.0	0.0	0.0
EVENT 4 - NOBL 7, 8 INSTALLATION												
NOBL – Bay 7	X		8.5	269.5	20.9	79.4	0.0	0.0	0.0	0.0	0.0	0.0
NOBL – Bay 8	X		8.5	269.5	-20.9	79.4	0.0	0.0	0.0	0.0	0.0	0.0
Wire Assy, Bay 7		X	0.0 [2]	-	-	-	-	-	-	-	-	-
MLI, Bay 8		X	0.0 [2]	-	-	-	-	-	-	-	-	-
MLI Patches, Bay 8		X	0.0 [2]	-	-	-	-	-	-	-	-	-
Wire, Bay 9		X	0.0 [2]	-	-	-	-	-	-	-	-	-
EVENT 5 - NOBL 5 INSTALLATION												
NOBL 5	X		9.0	269.5	78.7	22.5	0.0	0.0	0.0	0.0	0.0	0.0
NOBL Vent Plugs		X	0.7	269.5	78.7	22.5	0.0	0.0	0.0	0.0	0.0	0.0
MLI, Bay 5		X	0.0 [2]	-	-	-	-	-	-	-	-	-
EVA DAY 3												
EVENT 6 - WFPC II/WFC3 CHANGE-OUT												
WFPC II (Ref. 21)		X	619.6	218.6	-1.2	-49.5	49.0	46.0	28.0	0.0	0.0	0.0
WFC3 (Ref. 16)	X		963.6	218.7	0.7	-53.7	144.3	101.0	61.3	2.3	1.1	0.1
EVENT 7 - BATTERY CHANGE-OUT												
Bay 2 Battery Module (s/n 1022)		X	463.9	277.9	-18.7	-73.3	9.2	12.7	10.3	0.0	0.0	0.0
Bay 2 Battery Module-R (s/n 1032)	X		459.9	277.9	-18.7	-73.3	9.1	12.6	10.2	0.0	0.0	0.0
Bay 3 Battery Module (s/n 1021)		X	463.9	277.9	19.7	-73.1	9.2	12.7	10.3	0.0	0.0	0.0
Bay 3 Battery Module-R (s/n 1033)	X		459.9	277.9	19.7	-73.1	9.1	12.6	10.2	0.0	0.0	0.0

Table 5-37. Scheduled ORUs / ORIs in HST Coordinates (continued)

SM4 HARDWARE COMPONENT	INSTLD ON HST	RMVD FROM HST	CURRENT WEIGHT [1] (LBS)	CENTER OF GRAVITY (INCHES)			MOMENT OF INERTIA (SLUG-FT2)			PRODUCT OF INERTIA (SLUG-FT2)		
				V1	V2	V3	I_{V1}	I_{V2}	I_{V3}	I_{V1V2}	I_{V1V3}	I_{V2V3}
EVA DAY 4												
EVENT 8 - ASCS RADIATOR INSTL												
ASCS Radiator (Ref. 16)	X		427.9	154.7	-60.8	-54.1	44.4	246.6	212.0	12.8	4.6	-5.5
ASCS Cryo Vent Insert	X		3.4	101.5	-45.0	18.0	0.0	0.0	0.0	0.0	0.0	0.0
AS DSE –V2	X		0.8	110.0	-72.7	-42	0.0	0.0	0.0	0.0	0.0	0.0
AS DSE –V3	X		0.8	110.0	-42.0	-72.7	0.0	0.0	0.0	0.0	0.0	0.0
ESM Conn. Cap Assy		X	3.5	116.0	-60.7	72.1	0.0	0.0	0.0	0.0	0.0	0.0
Bay 4 Cryo Vent Cover		X	5.9	101.5	-45.0	18.0	0.0	0.0	0.0	0.0	0.0	0.0
EVENT 9 - STIK INSTALLATION												
STIK	X		60.1	119.8	35.4	19.1	1.7	1.2	2.4	0.0	0.0	0.0
EVA DAY 5												
EVENT 10 - FGS3/FGS3R CHANGE-OUT												
FGS3 (Ref. 9)		X	477.8	219.3	40.2	0.6	40.8	16.6	31.5	0.1	-0.2	-0.5
FGS3R (Ref. 15)	X		467.3	219.3	39.7	0.7	39.9	16.2	30.8	0.1	-0.2	-0.5

[1] Weight includes contingency.

[2] Weight not yet defined. Included in table as a placeholder.

Table 5-38. Scheduled ORU / ORIs on the FSS, in Orbiter Coordinates

SM4 HARDWARE COMPONENT	RMVD FROM FSS	INSTLD ON FSS	CURRENT WEIGHT [1] (LBS.)	CENTER OF GRAVITY (INCHES)			MOMENT OF INERTIA (SLUG-FT2)			PRODUCT OF INERTIA (SLUG-FT2)		
				X	Y	Z	I_{XX}	I_{YY}	I_{ZZ}	I_{XY}	I_{XZ}	I_{YZ}
EVA DAY 4												
EVENT 9 - STIK INSTALLATION												
STIK	X		60.1	89.1	-65.9	70.8	1.4	1.3	0.1	0.0	0.0	0.1

[1] Weight includes contingency.

Table 5-39. Scheduled ORUs / ORIs on the ORUC, in Orbiter Coordinates

SM4 HARDWARE COMPONENT	RMVD FROM ORUC	INSTLD ON ORUC	CURRENT WEIGHT [1] (LBS)	CENTER OF GRAVITY (INCHES)			MOMENT OF INERTIA (SLUG-FT2)			PRODUCT OF INERTIA (SLUG-FT2)		
				X	Y	Z	I_{XX}	I_{YY}	I_{ZZ}	I_{XY}	I_{XZ}	I_{YZ}
EVA DAY 1												
EVENT 1 - RSU CHANGE-OUT												
RSU1		X	24.3	7.5	71.1	18.3	0.1	0.1	0.1	0.0	0.0	0.0
RSU1R	X		23.9	7.5	71.1	18.3	0.1	0.1	0.1	0.0	0.0	0.0
RSU2		X	24.3	-11.0	56.3	18.3	0.1	0.1	0.1	0.0	0.0	0.0
RSU2R	X		23.9	-11.0	56.3	18.3	0.1	0.1	0.1	0.0	0.0	0.0
RSU3		X	24.3	-32.5	66.8	18.3	0.1	0.1	0.1	0.0	0.0	0.0
RSU3R	X		23.9	-32.5	66.8	18.3	0.1	0.1	0.1	0.0	0.0	0.0
RSU Connector Cap	X		0.6	7.5	71.1	18.3	0.0	0.0	0.0	0.0	0.0	0.0
RSU Connector Cap	X		0.6	-11.0	56.3	18.3	0.0	0.0	0.0	0.0	0.0	0.0
RSU Connector Cap	X		0.6	-32.5	66.8	18.3	0.0	0.0	0.0	0.0	0.0	0.0
EVENT 2 - DSC INSTALLATION												
DSC	X		16.5	-12.3	67.5	19.8	0.1	0.2	0.2	0.0	0.0	0.0
DSC HMD	X		2.5	-12.3	67.5	19.8	0.0	0.0	0.0	0.0	0.0	0.0
EVA DAY 2												
EVENT 3 - COSTAR/COS CHANGE-OUT												
COSTAR		X	659.3	-4.5	0.0	-17.5	29.4	105.4	105.4	0.0	0.0	0.0
COS	X		906.7	-4.5	0.0	-17.5	39.7	142.5	142.5	0.0	0.0	0.0
COS Thermal Joint Cover	X		5.9	33.5	-60.8	-60.5	0.0	0.0	0.0	0.0	0.0	0.0
EVENT 4 - NOBL 7, 8 INSTALLATION												
NOBL 7	X		8.5	-34.4	-63.6	-16.9	0.0	0.0	0.0	0.0	0.0	0.0
NOBL 8	X		8.5	-34.4	-63.6	-16.9	0.0	0.0	0.0	0.0	0.0	0.0
NOBL Vent Plug Caddy	X		0.2	-34.4	-63.6	-16.9	0.0	0.0	0.0	0.0	0.0	0.0
NOBL Vent Plug Caddy	X		0.2	-34.4	-63.6	-16.9	0.0	0.0	0.0	0.0	0.0	0.0
MLI Recovery Bag, Bay 7 & 8	X		1.8	-30.5	5.5	9.1	0.0	0.0	0.0	0.0	0.0	0.0
EVENT 5 - NOBL 5 INSTALLATION												
NOBL 5	X		9.0	-34.4	-63.6	-16.9	0.0	0.0	0.0	0.0	0.0	0.0
NOBL Vent Plug Caddy	X		0.2	-34.4	-63.6	-16.9	0.0	0.0	0.0	0.0	0.0	0.0
MLI Recovery Bag, Bay 5	X		1.6	-20.5	-4.5	9.1	0.0	0.0	0.0	0.0	0.0	0.0
EVA DAY 4												
EVENT 8 - ASCS RADIATOR INSTALL												
ASCS Cryo Vent Insert	X		3.4	32.0	49.4	-56.7	0.0	0.0	0.0	0.0	0.0	0.0
AS DSEs (-V3)	X		0.8	39.0	-58.1	-62.7	0.0	0.0	0.0	0.0	0.0	0.0
AS DSEs (-V2)	X		0.8	39.0	-58.1	-62.7	0.0	0.0	0.0	0.0	0.0	0.0
ASCS Radiator Sock, Lg		X	11.8	32.0	49.4	-56.7	0.0	0.0	0.0	0.0	0.0	0.0
ASCS Radiator Sock, Sm		X	11.8	32.0	49.4	-56.7	0.0	0.0	0.0	0.0	0.0	0.0

Table 5-39. Scheduled ORU / ORIs on the ORUC, in Orbiter Coordinates (continued)

SM4 HARDWARE COMPONENT	RMVD FROM ORUC	INSTLD ON ORUC	CURRENT WEIGHT [1] (LBS)	CENTER OF GRAVITY (INCHES)			MOMENT OF INERTIA (SLUG-FT2)			PRODUCT OF INERTIA (SLUG-FT2)		
				X	Y	Z	I_{XX}	I_{YY}	I_{ZZ}	I_{XY}	I_{XZ}	I_{YZ}
EVA DAY 5												
EVENT 10 - FGS3/FGS3R CHANGE-OUT												
FGS3		X	477.8	-71.0	-0.5	-5.9	40.5	29.9	20.6	0.0	0.0	0.0
FGS3R	X		467.3	-71.0	-0.5	-5.9	39.6	29.2	20.1	0.0	0.0	0.0
FGS Guide Studs, Locking		X	1.1	-71.0	-0.5	-5.9	0.0	0.0	0.0	0.0	0.0	0.0
FGS Guide Studs, Non-Locking		X	1.1	-71.0	-0.5	-5.9	0.0	0.0	0.0	0.0	0.0	0.0

[1] Weight includes contingency.

Table 5-40. Scheduled ORUs / ORIs on the SLIC, in Orbiter Coordinates

SM4 HARDWARE COMPONENT	RMVD FROM SLIC	INSTLD ON SLIC	CURRENT WEIGHT [1] (LBS)	CENTER OF GRAVITY (INCHES)			MOMENT OF INERTIA (SLUG-FT2)			PRODUCT OF INERTIA (SLUG-FT2)		
				X	Y	Z	I_{XX}	I_{YY}	I_{ZZ}	I_{XY}	I_{XZ}	I_{YZ}
EVA DAY 3												
EVENT 6 - WFPC II/WFC3 CHANGE-OUT												
WFPC II		X	619.6	-32.9	0.6	19.4	24.2	21.4	10.0	0.0	4.2	0.0
WFC3	X		963.6	-32.9	0.6	19.4	37.6	33.2	15.6	0.0	6.6	0.0
EVENT 7 - BATTERY CHANGE-OUT												
Bay 2 Battery Module (s/n 1022)		X	463.9	11.0	-22.9	-9.5	16.8	13.9	26.3	0.0	0.0	0.0
Bay 2 Battery Module-R (s/n 1032)	X		459.9	11.0	-22.9	-9.5	16.7	13.8	26.1	0.0	0.0	0.0
Bay 3 Battery Module (s/n 1021)		X	463.9	11.0	22.9	-9.5	16.8	13.9	26.3	0.0	0.0	0.0
Bay 3 Battery Module-R (s/n 1033)	X		459.9	11.0	22.9	-9.5	16.7	13.8	26.1	0.0	0.0	0.0
Battery Cap Assemblies		X	23.6	11.0	0.0	-9.5	0.0	0.0	0.0	0.0	0.0	0.0
EVA DAY 4												
EVENT 8 - ASCS RADIATOR INSTALL												
ASCS Radiator	X		427.9	-83.1	1.0	-33.9	118.4	7.2	112.3	-1.1	0.0	-0.0
ASCS Radiator Sock, Lg	X		11.8	-85.9	0.0	-34.8	0.1	0.0	0.1	0.0	0.0	0.0
ASCS Radiator Sock, Sm	X		11.8	-89.9	32.8	-34.3	0.0	0.0	0.0	0.0	0.0	0.0
ASCS Sock Restraint Strap	X		0.6	-88.7	0.0	-35.0	0.0	0.0	0.0	0.0	0.0	0.0
CPL Evaporator Protective Cover	X		2.4	-84.0	0.0	-32.1	0.0	0.0	0.0	0.0	0.0	0.0

[1] Weight includes contingency.

Table 5-41. Scheduled ORUs / ORIs on the Middeck, in Orbiter Coordinates

SM4 HARDWARE COMPONENT	RMVD FROM MIDDECK	INSTLD ON MIDDECK	CURRENT WEIGHT [1] (LBS.)	CENTER OF GRAVITY (INCHES)			MOMENT OF INERTIA (SLUG-FT2)			PRODUCT OF INERTIA (SLUG-FT2)		
				X	Y	Z	I_{XX}	I_{YY}	I_{ZZ}	I_{XY}	I_{XZ}	I_{YZ}
EVA DAY 1												
EVENT 1 - RSU INSTALLATION												
RSU Connector Cap		X	0.6	520.0	0.0	300.0	0.0	0.0	0.0	0.0	0.0	0.0
RSU Connector Cap		X	0.6	520.0	0.0	300.0	0.0	0.0	0.0	0.0	0.0	0.0
RSU Connector Cap		X	0.6	520.0	0.0	300.0	0.0	0.0	0.0	0.0	0.0	0.0
EVENT 2 - DSC INSTALLATION												
DSC HMD		X	2.5	520.0	0.0	300.0	0.0	0.0	0.0	0.0	0.0	0.0
EVA DAY 2												
EVENT 4 - NOBL 7, 8 INSTALLATION												
Wire Assy, Bay 7		X	0.0 [2]	520.0	0.0	300.0	0.0	0.0	0.0	0.0	0.0	0.0
MLI, Bay 8		X	0.0 [2]	520.0	0.0	300.0	0.0	0.0	0.0	0.0	0.0	0.0
MLI Patches, Bay 8		X	0.0 [2]	520.0	0.0	300.0	0.0	0.0	0.0	0.0	0.0	0.0
Wire, Bay 9		X	0.0 [2]	520.0	0.0	300.0	0.0	0.0	0.0	0.0	0.0	0.0
NOBL Vent Plug Caddy		X	0.2	520.0	0.0	300.0	0.0	0.0	0.0	0.0	0.0	0.0
NOBL Vent Plug Caddy		X	0.2	520.0	0.0	300.0	0.0	0.0	0.0	0.0	0.0	0.0
MLI Recovery Bag, Bay 7 & 8		X	1.8	520.0	0.0	300.0	0.0	0.0	0.0	0.0	0.0	0.0
EVENT 5 - NOBL 5 INSTALLATION												
NOBL Vent Plug, Bay 5		X	0.7	520.0	0.0	300.0	0.0	0.0	0.0	0.0	0.0	0.0
MLI Bay 5		X	0.0 [2]	520.0	0.0	300.0	0.0	0.0	0.0	0.0	0.0	0.0
NOBL Vent Plug Caddy		X	0.2	520.0	0.0	300.0	0.0	0.0	0.0	0.0	0.0	0.0
MLI Recovery Bag, Bay 5		X	1.6	520.0	0.0	300.0	0.0	0.0	0.0	0.0	0.0	0.0
EVA DAY 3												
EVENT 7 - BATTERY CHANGE-OUT												
Battery Cap Assemblies	X		23.6	520.0	0.0	300.0	0.0	0.0	0.0	0.0	0.0	0.0
EVA DAY 4												
EVENT 8 - ASCS RADIATOR INSTALL												
Bay 4 Cryo Vent Cover		X	5.9	520.0	0.0	300.0	0.0	0.0	0.0	0.0	0.0	0.0
ESM Conn. Cap Assy		X	3.5	520.0	0.0	300.0	0.0	0.0	0.0	0.0	0.0	0.0
ASCS Sock Restraint Strap		X	0.6	520.0	0.0	300.0	0.0	0.0	0.0	0.0	0.0	0.0
CPL Evaporator Brkt, STIS		X	2.4	520.0	0.0	300.0	0.0	0.0	0.0	0.0	0.0	0.0
EVA DAY 5												
EVENT 10 - FGS3/FGS3R CHANGE-OUT												
FGS Guide Studs, Locking	X		1.1	520.0	0.0	300.0	0.0	0.0	0.0	0.0	0.0	0.0
FGS Guide Studs,non-lock	X		1.1	520.0	0.0	300.0	0.0	0.0	0.0	0.0	0.0	0.0

[1] Weight includes contingency.

[2] Weight not yet defined. Included in table as a placeholder.

6 Introduction and Summary – FSS Carrier (Launch)

This section documents the FSS mass properties in compliance with requirements delineated in the NASA/GSFC contract NAS5-50000. This section provides mass properties status with respect to established weight budgets and reflects current program maturity for all hardware. All values reported herein are current as of August 2003 and supersede values previously reported in other documents. Within the summary tables contained herein, payload weights may vary by 1 lb. due to round off and final total percentages in the tables may vary up to 1% due to numerical round off.

The FSS total payload weight is 4800 lbs. which provides a +50 lb. weight margin with respect to the HST Fourth Servicing Mission (SM4) Level III Flight Systems and Servicing Project Requirements, STR-126 (Reference 2) allocation limit of 4850 lbs and the FSS Contract End Item (CEI) Specification (Reference 7) weight allocation of 4850 lbs. The FSS Cradle structure, avionics, EVA equipment, BAPS and harnessing weights were provided by Reference 1. The mass property values presented within this report reflect 98.0% actual, 0.5% calculated and 1.5% estimated for the hardware.

Figure 6-1 presents the FSS weight history with respect to the STE-68 allocation limit.

Figure 6-1. FSS Weight History

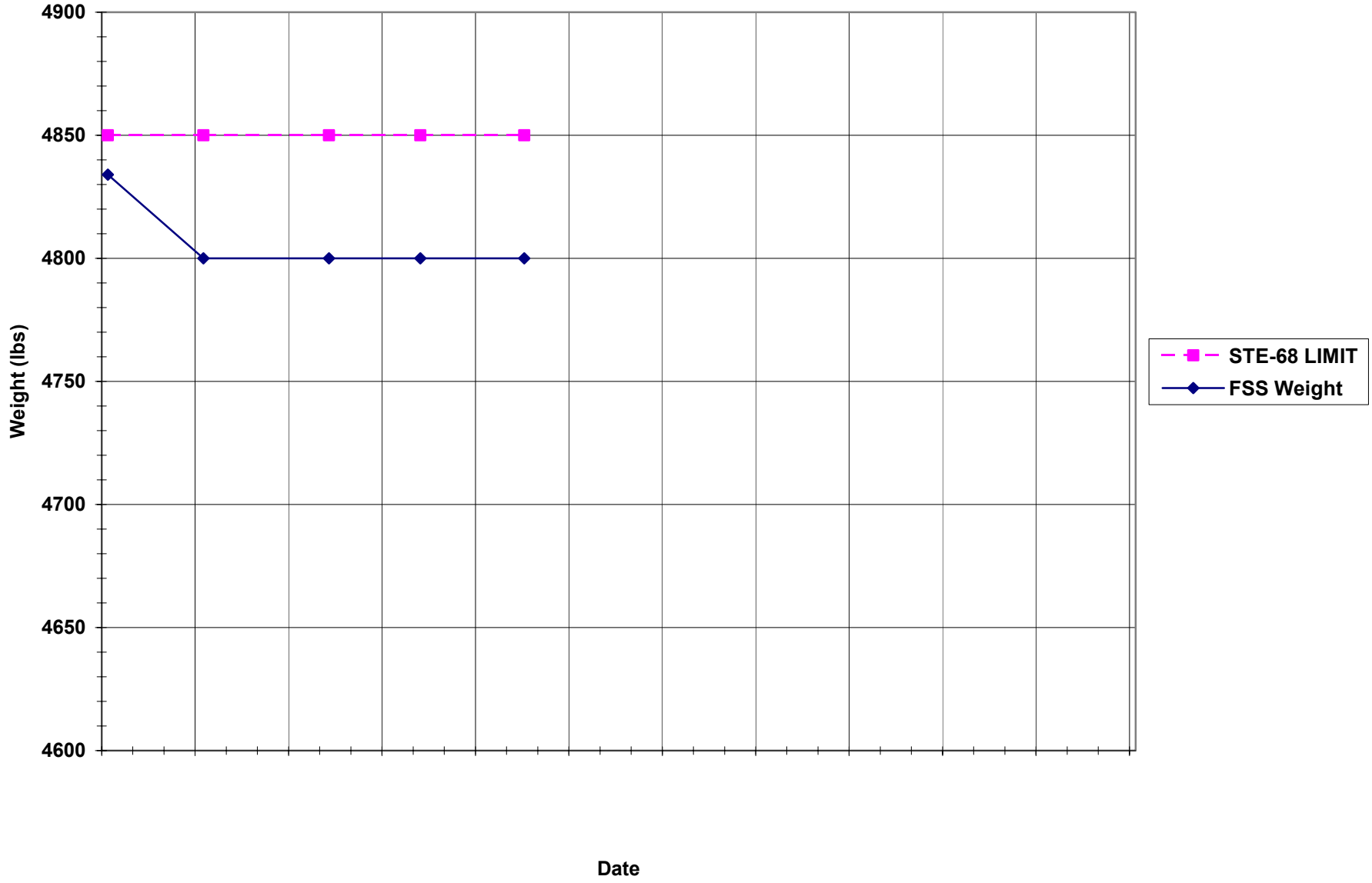

6.1 FSS Weight Details

This section provides a detailed weight statement summary. Table 6-1 documents the detailed component level weights for each cargo element and provides a tabulation of the weight as a function of weight growth. Weight growth allocations are defined below and are categorized as actual, calculated, or estimated. All weight growth allocations are consistent with the mass properties control plan (Reference 4). Table 6-1 also compares previously reported FSS weights to the current weights.

Weight Class	Definition	Weight Growth
Actual	Reflects actual weighing of the hardware	0.2%
Calculated	Calculated weights derived from released drawings	5.0%
Estimated	Items where the design has yet to mature and weight growth is expected to be greatest	18.0%

Table 6-1. FSS Weight Details

(Weights include contingency)

Description	Wt. - Last Report (lb)	Current Wt. (lb)	Changes - Last to Current (lb)	Weight Class			Note No. Refer to Section 6.2
				Act (%)	Calc. (%)	Est. (%)	
FSS Structure & Ancillary							
Cradle A	1595.2	1595.2	0.0	100	0	0	-
Latch Beam	277.6	277.6	0.0	100	0	0	-
Trunnion Starboard	36.0	36.0	0.0	100	0	0	-
Trunnion Port	36.0	36.0	0.0	100	0	0	-
Trunnion Keel	34.6	34.6	0.0	100	0	0	-
Total Structure	**1979.4**	**1979.4**	**0.0**	**100.0**	**0.0**	**0.0**	
Avionics							
FMDM A	19.5	19.5	0.0	100	0	0	-
FMDM B	19.5	19.5	0.0	100	0	0	-
EPDSU 1	116.6	116.6	0.0	100	0	0	-
EPDSU 2	116.6	116.6	0.0	100	0	0	-
J-Box	10.0	10.0	0.0	100	0	0	-
AMSB	24.8	24.8	0.0	0	100	0	-
SPCU	127.2	127.2	0.0	100	0	0	-
PPCU	128.0	128.0	0.0	100	0	0	-
IPCU	51.0	51.0	0.0	100	0	0	-
J-Box/PDSU Plate	10.2	10.2	0.0	100	0	0	-
EPDSU Bracket	5.7	5.7	0.0	100	0	0	-
EPDSU Plate & Rad	17.7	17.7	0.0	0	0	100	-
FMDM Plate	35.4	35.4	0.0	0	0	100	-
ORUC I/F	8.8	8.8	0.0	100	0	0	-
BSP Harness Plate	3.7	3.7	0.0	100	0	0	-
Total Avionics	**694.7**	**694.7**	**0.0**	**88.8**	**3.6**	**7.6**	

Description	Wt. - Last Report (lb)	Current Wt. (lb)	Changes- Last to Current (lb)	Weight Class			Note No. Refer to Section 6.2
				Actual (%)	Calc. (%)	Est. (%)	
BAPS (Pivoting)							
Base ring **	340.0	340.0	0.0	100	0	0	-
Berthing latch	45.7	45.7	0.0	100	0	0	-
Berthing latch	45.7	45.7	0.0	100	0	0	-
Berthing latch	45.7	45.7	0.0	100	0	0	-
Translator housing - port	24.9	24.9	0.0	100	0	0	-
Translator housing – starboard	24.9	24.9	0.0	100	0	0	-
Sill plate	6.3	6.3	0.0	100	0	0	-
Sill plate	6.3	6.3	0.0	100	0	0	-
Sill plate - lg	9.7	9.7	0.0	100	0	0	-
Translator shaft – port	2.2	2.2	0.0	100	0	0	-
Translator shaft – starboard	2.2	2.2	0.0	100	0	0	-
Translator & CDU	20.7	20.7	0.0	100	0	0	-
Cable reel	55.8	55.8	0.0	100	0	0	-
Cables	19.5	19.5	0.0	100	0	0	-
CCTV with prism	25.1	25.1	0.0	100	0	0	-
BAPS Radial Handrail 1	3.0	3.0	0.0	0	0	100	-
BAPS Radial Handrail 2	3.5	3.5	0.0	0	0	100	-
BAPS Handrail	3.1	3.1	0.0	100	0	0	-
BAPS Handrail	3.1	3.1	0.0	100	0	0	-
BAPS Handrail	3.1	3.1	0.0	100	0	0	-
BAPS Post Bracket	2.3	2.3	0.0	100	0	0	-
Umbilical Actuator	25.7	25.7	0.0	100	0	0	-
Deploy/Return Umbilical	21.6	21.6	0.0	100	0	0	-
Rotator & CDU	36.3	36.3	0.0	100	0	0	-
BAPS MLI	36.0	36.0	0.0	100	0	0	-
Total BAPS (Pivoting)	**812.4**	**812.4**	**0.0**	**99.2**	**0.0**	**0.8**	
BAPS (Non-Pivoting)							
Pivoter Strut	64.6	64.6	0.0	100	0	0	-
BAPS Strut	50.4	50.4	0.0	100	0	0	-
Stub Shaft	16.8	16.8	0.0	100	0	0	-
Pivoter	91.4	91.4	0.0	100	0	0	-
BSP Bracket	8.9	8.9	0.0	100	0	0	-
BSP Bracket	8.9	8.9	0.0	100	0	0	-
BSP	46.1	46.1	0.0	100	0	0	-
Preload Release Bracket	6.5	6.5	0.0	100	0	0	-
BAPS (Non-Pivoting)	**293.6**	**293.6**	**0.0**	**100.0**	**0.0**	**0.0**	

Description	Wt. - Last Report (lb)	Current Wt. (lb)	Changes- Last to Current (lb)	Weight Class			Note No. Refer to Section 6.2
				Actual (%)	Calc. (%)	Est. (%)	
Miscellaneous							
Downlock & CDU	98.1	98.1	0.0	100	0	0	-
Downlock Bracket	46.5	46.5	0.0	100	0	0	-
APC Latch & PFR Mounting Hdw	26.5	26.5	0.0	100	0	0	-
APC Latch Plate	19.3	19.3	0.0	100	0	0	-
SIP Transition Bracket	3.9	3.9	0.0	100	0	0	-
Outrigger clevis - outboard port	5.1	5.1	0.0	100	0	0	-
Outrigger clevis - outboard starboard	5.1	5.1	0.0	100	0	0	-
Outrigger clevis - inboard port	4.6	4.6	0.0	100	0	0	-
Outrigger clevis - inboard starboard	4.6	4.6	0.0	100	0	0	-
Harnesses **	441.6	441.6	0.0	100	0	0	-
MLI	38.7	38.7	0.0	100	0	0	-
CDU Cable Harness *(72)*	0.2	0.2	0.0	100	0	0	-
Total Miscellaneous	**694.2**	**694.2**	**0.0**	**100.0**	**0.0**	**0.0**	
EVA							
Keel PFR Bracket	1.3	1.3	0.0	100	0	0	-
PFR socket - upper starboard forward	0.9	0.9	0.0	100	0	0	-
PFR socket - upper port forward	0.9	0.9	0.0	100	0	0	-
PFR socket - lower starboard forward	0.9	0.9	0.0	100	0	0	-
PFR socket - lower port forward	0.9	0.9	0.0	100	0	0	-
PFR socket - keel forward	0.9	0.9	0.0	100	0	0	-
Starboard lower handrail	8.6	8.6	0.0	100	0	0	-
Port lower handrail	8.6	8.6	0.0	100	0	0	-
Starboard middle handrail	6.7	6.7	0.0	100	0	0	-
Starboard outside handrail	16.0	16.0	0.0	100	0	0	-
Port outside handrail	16.0	16.0	0.0	100	0	0	-
Starboard inside handrail	2.4	2.4	0.0	100	0	0	-
Starboard top handrail	3.6	3.6	0.0	100	0	0	-
Port top handrail	3.6	3.6	0.0	100	0	0	-
Angle handrail	3.0	3.0	0.0	100	0	0	-
APE *(81)*	11.4	11.4	0.0	100	0	0	-
PFR Socket converter 90° *(121)*	2.7	2.7	0.0	100	0	0	-
LGA Cover *(124)*	20.8	20.8	0.0	100	0	0	-

Description	Wt. - Last Report (lb)	Current Wt. (lb)	Changes- Last to Current (lb)	Weight Class			Note No. Refer to Section 6.2
				Actual (%)	Calc. (%)	Est. (%)	
EVA (continued)							
Berthing assist restraint & stowage *(125)*	10.6	10.6	0.0	0	0	100	-
HST PFR *(136)*	45.5	45.5	0.0	100	0	0	-
Total EVA	**165.3**	**165.3**	**0.0**	**93.6**	**0.0**	**6.4**	
ORU							
STIK Handrail	3.5	3.5	0.0	0	0	100	-
STIK *(19)*	60.1	60.1	0.0	100	0	0	-
STIK Enclosure	97.2	97.2	0.0	100	0	0	-
Total ORU	**160.8**	**160.8**	**0.0**	**97.8**	**0.0**	**2.2**	
Total FSS Complement	**4800.4**	**4800.4**	**0.0**	**98.0**	**0.5**	**1.5**	

** = Noted actual based on the fact that the engineers responsible for the hardware have contingency built into the number reported. Weight reported is a maximum.

Note: Italicized numbers in parentheses indicate corresponding number in latest SMEL.

6.2 FSS Change Analysis

There were no changes to the FSS section since the last report was issued.

6.3 FSS Mass Properties

This section provides a detailed summary of weights, centers of gravity, and inertia properties of the FSS payload and major components. Both the overall FSS mass properties for the mission and Ground Support are reported in Table 6-2 with more detail on individual components found in Appendix A. Figure 2-1 defines the FSS local axis system in which all mass properties in Table 6-2 are referenced to along with the necessary translation between the FSS local coordinate system and the Orbiter coordinate system. All mass properties reported in Table 6-2 are centroidal.

Table 6-2. FSS Mass Properties

Description	Weight [1] (lb)	CG in FSS Coordinate System (in)			Component Weight Moment of Inertia [2] (slug-ft^2)					
		X	Y	Z	Ixx	Iyy	Izz	Ixy	Ixz	Iyz
FSS Structure & Ancillary Equipment:										
Structure	1979.4	100.0	0.00	82.1	2025	691	1360	0	0	0
Avionics	694.7	107.8	1.6	97.9	591	127	477	17	21	49
BAPS (Pivoting Components)	812.4	99.1	-0.1	146.8	120	67	64	1	3	1
BAPS (Non-Pivoting Components)	293.6	99.4	7.3	136.6	268	192	77	0	4	20
EVA	165.3	91.9	-14.5	100.1	192	89	108	3	9	-16
Misc	694.2	99.2	4.4	92.7	387	70	321	7	-3	-3
GSE/Outrigger Hardware	234.0	84.1	0.0	110.5	308	8	315	0	1	0
FSS Payload Items:										
STIK & Enclosure	160.8	88.8	-64.2	68.6	7	6	3	0	0	0
Total FSS Payload + GSE	**5034.4**	**99.4**	**-1.3**	**100.9**	**4708**	**1932**	**2909**	**57**	**28**	**133**

[1] Weights include contingency.
[2] In forming inertia matrix (inertia tensor), multiply all products by (-1).

6.4 Transformation Matrices

The transformation matrices for defining the orientation of the FSS Principal Axis (PA) relative to the FSS geometric axis (GA) system is defined as follows:

$$\begin{vmatrix} 0.9995934 & -0.0223606 & -0.0177109 \\ 0.0252785 & 0.9820712 & 0.1868110 \\ 0.0132161 & -0.1871827 & 0.9822368 \end{vmatrix} \times \begin{vmatrix} X_{FSS} \\ Y_{FSS} \\ Z_{FSS} \end{vmatrix} = \begin{vmatrix} X_{PA} \\ Y_{PA} \\ Z_{PA} \end{vmatrix}$$

The position and orientation of the FSS axis system (FSSAS) origin in the Orbiter cargo bay defined with respect to the Orbiter Structural Reference System (OSRS) is as follows:

$$\begin{matrix} X_{FSSAS} = 0 \text{ in} & & X_{OSRS} = 1075.2 \text{ in} \\ Y_{FSSAS} = 0 \text{ in} & \text{at} & Y_{OSRS} = 0 \text{ in} \\ Z_{FSSAS} = 0 \text{ in} & & Z_{OSRS} = 300 \text{ in} \end{matrix}$$

The normal orientation of the FSSAS with respect to the OSRS is as follows:

$$\begin{matrix} X_{FSSAS} \\ Y_{FSSAS} \\ Z_{FSSAS} \end{matrix} = \begin{vmatrix} 1 & 0 & 0 \\ 0 & 1 & 0 \\ 0 & 0 & 1 \end{vmatrix} \begin{matrix} X_{OSRS} \\ Y_{OSRS} \\ Z_{OSRS} \end{matrix}$$

6.5 Pending and Potential Changes

Pending and potential changes to component and system mass properties will be tracked and reported within this section.

6.5.1 Structure

There are no pending or potential changes at this time.

6.5.2 Avionics

There are no pending or potential changes at this time.

6.5.3 BAPS (Pivoting Components)

There are no pending or potential changes at this time.

6.5.4 BAPS (Non-Pivoting Components)

There are no pending or potential changes at this time.

6.5.5 Miscellaneous

There are no pending or potential changes at this time.

6.5.6 EVA

There are no pending or potential changes at this time.

6.5.7 STIK & Enclosure

The STIK is still under development (interface material, soft dock feature), so it will need to be re-weighed once in its final configuration.

6.6 Orbiter Payload Data

Data referenced in this section contains the mass property data required by the PIP Annex 1 for compliance with control weight requirements specified in Reference 3, Section 4.1. This data is also used for Orbiter mission performance planning relative to the current payload weight.

The FSS weight and cg location, with respect to the Orbiter Reference frame, are listed below along with the STR-126 (Reference 2) mass allocation.

Table 6-3. FSS CG – Orbiter Coordinates

STR-126 Allocated Weight (lbs)	Weight (lbs)	Center of Gravity (inches)		
		Xo	Yo	Zo
4850	4800	1175.4	-1.3	400.4

6.7 Weight and Mass Properties Reporting

The FSS Payload Weight Log will be documented within reports for the carrier system. These reports delineate a schedule of configuration changes and anticipated weight changes, and will be provided at the following milestones: upon delivery of the payload to the launch site, transfer of the payload to the integration facilities, transfer to the launch pad, and closeout of the Orbiter for flight.

6.8 Weight and Balance Test

Payload weight and balance tests will be witnessed and verified by an independent observer assigned to the NASA/GSFC HST Project Flight Assurance group.

6.9 Weight and Mass Properties Certification

The weight and mass properties certification will be documented as a part of the Flight Readiness Review process.

7 Introduction and Summary – ORUC (Launch)

This section documents the ORUC mass properties in compliance with requirements delineated in the NASA/GSFC contract NAS5-50000. This section provides mass properties status with respect to established weight budgets and reflects current program maturity for all hardware. All values reported herein are current as of May 2003 and supersede values previously reported in other documents. Within the summary tables contained herein, payload weights may vary by 1 lb. due to round off and final total percentages in the tables may vary up to 1% due to numerical round off.

The ORUC total payload weight is 7362 lbs which provides a +38 lb weight margin with respect to the HST Fourth Servicing Mission (SM4) Level III Flight Systems and Servicing Project Requirements, STR-126 (Reference 2) weight allocation of 7400 lbs and the ORUC Contract End Item (CEI) Specification (Reference 5) weight allocation of 7400 lbs. The mass properties for the ORUC and ORU hardware were provided by Reference 1. The mass property values presented within this report reflect 93.7% actual, 0.7% calculated and 5.6% estimated for the hardware.

Figure 7-1 presents the ORUC weight history with respect to the STE-72 allocation limit.

Figure 7-1. ORUC Weight History

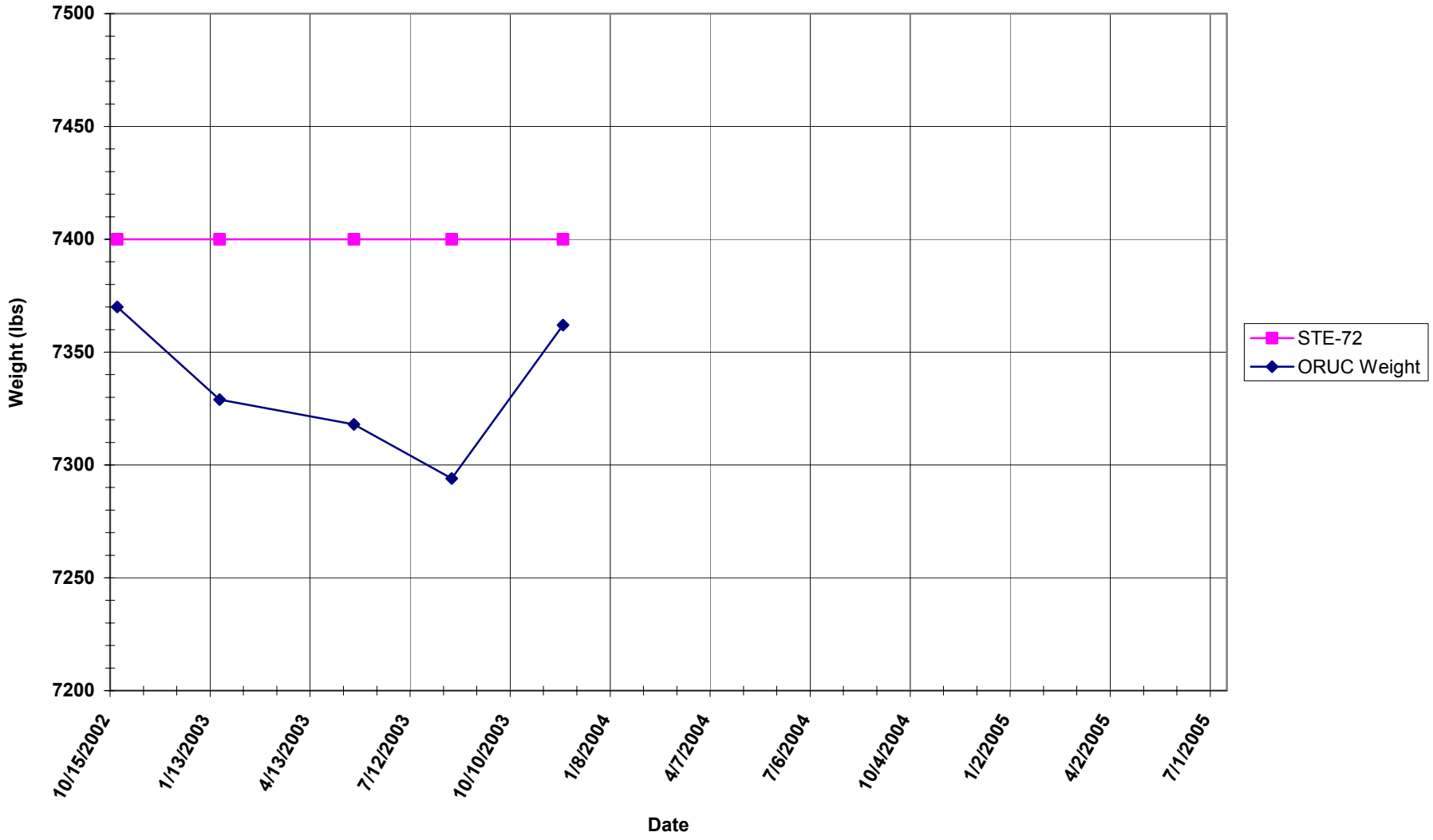

7.1 ORUC Weight Details

This section provides a detailed weight statement summary. Table 7-1 documents the detailed component level weights for each cargo element and provides a tabulation of the weight as a function of weight growth. Weight growth allocations are defined below and are categorized as actual, calculated, or estimated. All weight growth allocations are consistent with the mass properties control plan (Reference 4).

Weight Class	Definition	Weight Growth
Actual	Reflects actual weighing of the hardware	0.2%
Calculated	Calculated weights derived from released drawings	5.0%
Estimated	Items where the design has yet to mature and weight growth is expected to be greatest	18.0%

Table 7-1. ORUC Weight Details

(Weights include contingency)

Description	Wt. - Last Report (lb)	Current Wt. (lb)	Changes - Last to Current (lb)	Weight Class			Note No. Refer to Section 7.2
				Actual (%)	Calc. (%)	Est. (%)	
ORUC Pallet							
Pallet and Keel	1452.6	1452.6	0.0	100	0	0	-
Total Pallet	**1452.6**	**1452.6**	**0.0**	**100.0**	**0.0**	**0.0**	
Avionics							
Panel – Starboard	11.9	11.9	0.0	100	0	0	-
PRJU	9.5	9.5	0.0	100	0	0	-
SAAMD & mounting plate	3.7	3.7	0.0	100	0	0	-
Harness	21.1	21.1	0.0	100	0	0	-
Total Avionics	**46.2**	**46.2**	**0.0**	**100.0**	**0.0**	**0.0**	
EVA & CATs							
Handrail H23 - Mid frame, fwd port	1.6	1.6	0.0	100	0	0	-
PFR socket S31 – frame, aft stbd	1.9	1.9	0.0	100	0	0	-
PFR socket S24 - frame, aft port	1.9	1.9	0.0	100	0	0	-
PFR socket S20 – frame, fwd stbd	1.9	1.9	0.0	100	0	0	-
PFR socket S21 - frame, fwd port	1.9	1.9	0.0	100	0	0	-
Handrail H29 - Sill	2.2	2.2	0.0	100	0	0	-
Handrail H20 - Upper frame, fwd stbd	2.2	2.2	0.0	100	0	0	-
Handrail H24 - Upper frame, fwd port	2.2	2.2	0.0	100	0	0	-
Handrail H28 - Upper frame, port aft	2.3	2.3	0.0	100	0	0	-
Handrail H25 - Upper	1.7	1.7	0.0	100	0	0	-

frame, stbd aft							
Description	**Wt. - Last Report (lb)**	**Current Wt. (lb)**	**Changes - Last to Current (lb)**	**Weight Class**			**Note No. Refer to Section 7.2**
				Actual (%)	**Calc. (%)**	**Est. (%)**	
EVA & CATs (continued)							
PFR Socket S22 – Frame	0.0	1.9	1.9	100	0	0	1
PFR Socket S27 – Frame	0.0	1.9	1.9	100	0	0	
PFR Socket S28 – Frame	0.0	1.9	1.9	100	0	0	
PFR Socket S29 – Frame	0.0	1.9	1.9	100	0	0	
Forward fixture *(11)*	48.1	48.1	0.0	0	100	0	-
Aft fixture *(5)*	45.0	45.0	0.0	100	0	0	-
Translation aid – starboard *(123)*	13.6	13.6	0.0	100	0	0	-
Translation aid – port *(123)*	13.6	13.6	0.0	100	0	0	-
ASIPE Safety Bar	16.1	16.1	0.0	100	0	0	-
ASIPE Safety Bar brkts	6.6	6.6	0.0	100	0	0	-
FGS handhold	13.5	13.5	0.0	100	0	0	-
FGS handhold	13.5	13.5	0.0	100	0	0	-
CAST & mtg hdw – primary	8.4	14.2	5.8	0	0	100	2
CAST & mtg hdw – secondary	8.4	14.2	5.8	0	0	100	
PFR socket S26 – LIS, center	1.1	1.1	0.0	100	0	0	-
PFR socket S25 – LIS, aft	1.1	1.1	0.0	100	0	0	-
MLI repair tool, mounting hdw *(79)*	1.6	1.6	0.0	100	0	0	-
MLI conting blankets – small *(100)*	4.4	4.4	0.0	100	0	0	-
MLI conting blkt (small) pouch	2.4	2.4	0.0	0	0	100	-
MLI conting. blankets – large *(99)*	3.6	3.6	0.0	100	0	0	-
MLI conting. blkt (large) pouch	2.6	2.6	0.0	0	0	100	-
Wide Field handhold *(9)*	53.1	53.1	0.0	0	0	100	-
ASLR mounting plate	43.7	43.7	0.0	100	0	0	-
ASLR kits, qty 9 *(51, 52, 53)*	17.9	17.9	0.0	100	0	0	-
MLI Recovery Bags Pouch	3.0	3.0	0.0	100	0	0	-
MLI Recovery Bag – Bay 5 *(96)*	1.6	1.6	0.0	100	0	0	
MLI Recovery Bag – Bay 7 & 8 *(97)*	1.8	1.8	0.0	100	0	0	
Handrail Caddy Pouch-5	1.0	1.0	0.0	100	0	0	-
Handrail Caddy Pouch-5	1.0	1.0	0.0	100	0	0	-
Handrail Caddy Pouch-7	1.0	1.0	0.0	100	0	0	-
V2 Handrail Covers Caddy *(82)*	2.7	2.7	0.0	100	0	0	-
V2 Handrail Covers Caddy *(82)*	2.7	2.7	0.0	100	0	0	-

RSU Handrail Covers Caddy *(83)*	2.8	2.8	0.0	100	0	0	-
PFR Extender, ASIPE *(122)*	3.6	3.6	0.0	100	0	0	-

Description	Wt. – Last Report (lb)	Current Wt. (lb)	Changes – Last to Current (lb)	Weight Class			Note No. Refer to Section 7.2
				Actual (%)	Calc. (%)	Est. (%)	
EVA & CATs (continued)							
PFR Socket (ASIPE PFR)	2.4	2.0	-0.4	100	0	0	3
MTL, in SOPE *(120)*	3.4	3.4	0.0	100	0	0	-
Gap Spanner *(132)*	2.0	2.0	0.0	0	0	100	-
STS PFR *(134)*	0.0	13.1	13.1	0	0	100	4
STS PFR, FSIPE *(134)*	0.0	13.1	13.1	0	0	100	
STS PFR, ASIPE *(134)*	0.0	13.1	13.1	0	0	100	
Push Button Artic Socket *(135)*	0.0	4.8	4.8	0	0	100	5
Push Button Artic Socket *(135)*	0.0	4.8	4.8	0	0	100	
Push Button Artic Socket *(135)*	0.0	4.8	4.8	0	0	100	
Jettison Handle *(80)*	0.0	5.5	5.5	0	0	100	6
Spare Pip Pins *(71)*	0.0	2.8	2.8	0	0	100	7
Total EVA & CATs	**367.0**	**447.8**	**80.8**	**55.6**	**10.7**	**33.6**	
LIS (Unsprung)							
LIS Cradle	711.1	711.1	0.0	100	0	0	-
Torque brackets	20.0	20.0	0.0	100	0	0	-
Struts	71.5	71.5	0.0	100	0	0	-
Torque tube – starboard	19.8	19.8	0.0	100	0	0	-
Torque tube – port	19.7	19.7	0.0	100	0	0	-
Z spring roller tracks (fwd)	64.1	64.1	0.0	100	0	0	-
Z spring roller tracks (aft)	64.1	64.1	0.0	100	0	0	-
Total LIS	**970.3**	**970.3**	**0.0**	**100.0**	**0.0**	**0.0**	
LIS (Sprung Mass)							
Z spring – starboard	39.9	39.9	0.0	100	0	0	-
Z spring – port	39.9	39.9	0.0	100	0	0	-
Block assy –starboard	128.6	128.6	0.0	100	0	0	-
Block assembly – port	128.6	128.6	0.0	100	0	0	-
Y spring (2) – starboard	9.3	9.3	0.0	100	0	0	-
Y spring (2) – port	9.3	9.3	0.0	100	0	0	-
Z spring spacer – starboard	7.6	7.6	0.0	100	0	0	-
Z spring spacer – port	7.6	7.6	0.0	100	0	0	-
Mid z spring support plate – starboard	12.7	12.7	0.0	100	0	0	-
Mid z spring support plate – port	12.7	12.7	0.0	100	0	0	-
LIS pushrods – port	6.9	6.9	0.0	100	0	0	-
LIS pushrods – starboard	6.9	6.9	0.0	100	0	0	-
Total LIS (Sprung mass)	**410.0**	**410.0**	**0.0**	**100.0**	**0.0**	**0.0**	

Description	Wt. – Last Report (lb)	Current Wt. (lb)	Changes – Last to Current (lb)	Weight Class			Note No. Refer to Section 7.2
				Actual (%)	Calc. (%)	Est. (%)	
Shelf							
Starboard shelf	151.4	151.4	0.0	100	0	0	-
Outboard shelf handrail	10.2	10.2	0.0	100	0	0	-
Struts	86.0	86.0	0.0	100	0	0	-
PIP pins (qty 8) & bracket	11.8	11.8	0.0	0	0	100	-
Total Shelf	**259.4**	**259.4**	**0.0**	**95.5**	**0.0**	**4.5**	
SOPE							
SOPE	283.0	283.0	0.0	100	0	0	-
Total SOPE	**283.0**	**283.0**	**0.0**	**100.0**	**0.0**	**0.0**	
ASIPE							
ASIPE box structure	797.8	797.8	0.0	100	0	0	-
ASIPE A latch	5.5	5.5	0.0	100	0	0	-
ASIPE B latch	31.1	31.1	0.0	100	0	0	-
ASIPE C latch	5.3	5.3	0.0	100	0	0	-
ASIPE trunnion–port	30.6	30.6	0.0	100	0	0	-
ASIPE trunnion–starboard	30.6	30.6	0.0	100	0	0	-
Y spring track – port	18.0	18.0	0.0	100	0	0	-
Y spring track – starboard	18.0	18.0	0.0	100	0	0	-
Pushrod brkts – starboard	12.0	12.0	0.0	100	0	0	-
Pushrod brackets – port	12.0	12.0	0.0	100	0	0	-
Total ASIPE	**960.9**	**960.9**	**0.0**	**100.0**	**0.0**	**0.0**	
FSIPE							
FSIPE	621.1	602.7	-18.4	100	0	0	8
Total FSIPE	**621.1**	**602.7**	**-18.4**	**100.0**	**0.0**	**0.0**	
NOBL Protective Enclosure							
NPE	177.0	177.0	0.0	0	0	100	-
Total NPE	**177.0**	**177.0**	**0.0**	**0.0**	**0.0**	**100.0**	
ATMs							
ATM1	94.4	94.4	0.0	100	0	0	-
ATM2	94.2	94.2	0.0	100	0	0	-
Total ATMs	**188.6**	**188.6**	**0.0**	**100.0**	**0.0**	**0.0**	
ORUs /ORIs / CATs							
ECU *(37)*	20.7	20.7	0.0	0	0	100	-
RSU 1R1 + conn caps *(34, 38)*	24.4	24.4	0.0	100	0	0	-
RSU 2R2 + conn caps *(34, 38)*	24.4	24.4	0.0	100	0	0	-
RSU 3R2 + conn caps *(34, 38)*	24.4	24.4	0.0	100	0	0	-

Description	Wt. – Last Report (lb)	Current Wt. (lb)	Changes – Last to Current (lb)	Weight Class			Note No. Refer to Section 7.2
				Actual (%)	Calc. (%)	Est. (%)	
ORUs /ORIs / CATs (continued)							
DSC *(41)*	16.5	16.5	0.0	0	0	100	-
DSC HMD *(43)*	2.5	2.5	0.0	0	0	100	-
NOBL, plugs & caddy *(54-56, 58, 59)*	32.0	32.0	0.0	100	0	0	-
ASCS cryo vent port insert *(20)*	3.4	3.4	0.0	100	0	0	-
ASCS cryo vent port insert *(21)*	3.4	3.4	0.0	100	0	0	-
COSTAR Y harness *(4)*	9.2	9.2	0.0	100	0	0	-
COS thermal joint cover *(33)*	5.9	5.9	0.0	0	0	100	-
Transport bag, ASCS sock *(30)*	2.2	2.2	0.0	100	0	0	-
DSEs (qty 4) & caddy *(28, 29)*	5.9	5.9	0.0	0	0	100	-
Rib clamps (qty 6) & caddy *(66, 67)*	18.8	18.8	0.0	100	0	0	-
COS *(1)*	903.3	884.3	-19.0	100	0	0	9
COS Axial Handhold *(78)*	0.0	22.4	22.4	0	0	100	
FGS-3R *(13)*	463.2	463.2	0.0	100	0	0	-
Total ORUs/ORIs/CATs	**1560.2**	**1563.6**	**+3.4**	**95.3**	**0.0**	**4.7**	
Total ORUC Complement	**7296.3**	**7362.1**	**65.8**	**93.7**	**0.7**	**5.6**	

Note: Italicized numbers in parentheses indicate corresponding number in latest SMEL.

7.2 ORUC Change Analysis

This section provides a summary of changes to the weights and growth allocations documented in Table 7-1.

1. Four PFR Sockets added.
2. Previously reported weight was an old value. CAST being redesigned.
3. Accuracy class changed from E to A.
4. STS PFRs added per last SMEL review.
5. Push Button Articulating Sockets added per last SMEL review.
6. Jettison Handle was not included in Rev. C because it was unclear where it was launching. It is temporarily being reported in the ORUC, so that its weight is captured.
7. Weight for Spare Pip Pins was not known for Rev. C, but weight from SM3B ESEL was used for this report.
8. Actual weight data located for FSIPE.
9. Separated COS and Axial Handhold weight to reflect different SMEL numbers and accuracy classes.

7.3 ORUC Mass Properties

This section provides a detailed summary of weights, centers of gravity, and inertia properties of the ORUC payload and major components. Overall ORUC mass properties for the mission are reported in Table 7-2 with more detail on individual components found in Appendix B. Figure 2-3 defines the ORUC local axis system in which all mass properties in Table 7-2 are referenced to along with the necessary translation between the ORUC local coordinate system and the Orbiter coordinate system. All mass properties reported in Table 7-2 are centroidal.

Table 7-2. ORUC Mass Properties

Description	Weight [1] (lb)	CG in ORUC Reference System (in)			Component Weight Moment of Inertia [2] (slug-ft^2)					
		X	Y	Z	Ixx	Iyy	Izz	Ixy	Ixz	Iyz
ORUC Structure and Ancillary Equipment:										
Pallet	1452.6	-29.4	0.0	-57.6	1127	506	1288	0	0	0
Avionics	46.2	27.5	4.2	-82.3	4	1	4	0	0	0
EVA & CATs	447.8	-36.1	-23.3	-13.6	420	413	608	-20	26	-85
LIS (Unsprung)	970.3	-29.5	0.0	-45.5	405	208	409	0	0	0
LIS (Sprung Mass)	410.0	-29.5	0.0	-17.5	170	18	177	0	0	0
Shelf	259.4	-32.1	65.9	3.8	16	65	61	0	-1	3
SOPE	283.0	-8.0	63.0	21.0	8	24	25	0	0	0
ASIPE	960.9	-1.9	-0.5	-15.7	186	284	401	-4	-6	2
FSIPE	602.7	-75.5	0.0	0.1	47	37	25	0	1	0
NPE & ATMs	365.6	1.9	-30.6	-39.3	246	163	313	88	-61	-57
ORUC Payload Items:										
ORUs, ORIs, CATs	1563.6	-23.8	1.8	-12.6	301	585	674	6	-67	71
Total ORUC Payload	7362.1	-26.2	2.1	-25.4	4349	3689	5162	73	-199	231

[1] Weights include contingency.
[2] In forming inertia matrix (inertia tensor), multiply all products by (-1).

7.4 Transformation Matrices

The transformation matrices for defining the orientation of the ORUC Principal Axis (PA) relative to the ORUC geometric axis (GA) system is defined as follows:

$$\begin{vmatrix} 0.9720592 & -0.0283905 & -0.2330149 \\ 0.0630415 & 0.9877656 & 0.1426384 \\ 0.2261144 & -0.1533426 & 0.9619560 \end{vmatrix} \times \begin{vmatrix} X_{ORUC} \\ Y_{ORUC} \\ Z_{ORUC} \end{vmatrix} = \begin{vmatrix} X_{PA} \\ Y_{PA} \\ Z_{PA} \end{vmatrix}$$

The position and orientation of the ORUC axis system (ORUCAS) origin in the Orbiter cargo bay defined with respect to the Orbiter Structural Reference System (OSRS) is as follows:

X_{ORUCAS}= 0 in		X_{OSRS}= 998.2 in
Y_{ORUCAS}= 0 in	at	Y_{OSRS} = 0 in
Z_{ORUCAS} = 0 in		Z_{OSRS}= 414.0 in

The normal orientation of the ORUCAS with respect to the OSRS is as follows:

$$\begin{matrix} X_{ORUCAS} \\ Y_{ORUCAS} \\ Z_{ORUCAS} \end{matrix} = \begin{vmatrix} 1 & 0 & 0 \\ 0 & 1 & 0 \\ 0 & 0 & 1 \end{vmatrix} \begin{matrix} X_{OSRS} \\ Y_{OSRS} \\ Z_{OSRS} \end{matrix}$$

7.5 Pending and Potential Changes

Pending and potential changes to component and system mass properties will be tracked and reported within this section.

7.5.1 Pallet and Keel

There are no pending or potential changes at this time.

7.5.2 Avionics

There are no pending or potential changes at this time.

7.5.3 EVA

There are no pending or potential changes at this time.

7.5.4 Load Isolation System (LIS)

There are no pending or potential changes at this time.

7.5.5 Shelf

There are no pending or potential changes at this time.

7.5.6 Sprung Mass (LIS)

There are no pending or potential changes at this time.

7.5.7 SOPE

There are no pending or potential changes at this time.

7.5.8 ASIPE

There are no pending or potential changes at this time.

7.5.9 FSIPE

There are no pending or potential changes at this time.

7.5.10 NPE

There are no pending or potential changes at this time.

7.5.11 ATMs

There are no pending or potential changes at this time.

7.5.12 ORUs / ORIs / CATs

There are no pending or potential changes at this time.

7.6 Orbiter Payload Data

Data referenced in this section contains the mass property data required by the PIP Annex 1 for compliance with control weight requirements specified in Reference 3, Section 4.1. This data is also used for Orbiter mission performance planning relative to the current payload weight.

The ORUC weight and cg location, with respect to the Orbiter Reference frame, are listed below along with the STR-126 (Reference 2) mass allocation.

Table 7-3. ORUC CG – Orbiter Coordinates

STR-126 Allocated Weight (lbs)	Weight (lbs)	Center of Gravity (inches)		
		Xo	Yo	Zo
7400	7362	972.0	2.1	388.6

7.7 Weight and Mass Properties Reporting

The ORUC Payload Weight Log will be documented within reports for the carrier system. These reports delineate a schedule of configuration changes and anticipated weight changes, and will be provided at the following milestones: upon delivery of the payload to the launch site, transfer of the payload to the integration facilities, transfer to the launch pad, and closeout of the Orbiter for flight.

7.8 Weight and Balance Test

Payload weight and balance tests will be witnessed and verified by an independent observer assigned to the NASA/GSFC HST Project Flight Assurance group.

7.9 Weight and Mass Properties Certification

The weight and mass properties certification will be documented as a part of the Flight Readiness Review process.

8 Introduction and Summary – SLIC (Launch)

This section documents the SLIC mass properties in compliance with requirements delineated in the NASA/GSFC contract NAS5-50000. This section provides mass properties status with respect to established weight budgets and reflects current program maturity for all hardware. All values reported herein are current as of May 2003 and supersede values previously reported in other documents. Within the summary tables contained herein, payload weights may vary by 1 lb. due to round off and final total percentages in the tables may vary up to 1% due to numerical round off.

The SLIC total payload weight is 6592 lbs, which provides a +408 lb. weight margin with respect to the HST Fourth Servicing Mission (SM4) Level III Flight Systems and Servicing Project Requirements, STR-126 (Reference 2), weight allocation of 7000 lbs and the SLIC Contract End Item (CEI) Specification (Reference 6) weight allocation of 7000 lbs. The SLIC hardware weights were provided by Reference 1. The mass property values presented within this report reflect 22.9% actual, 61.1% calculated and 16.0% estimated for the hardware.

Figure 8-1 presents the SLIC weight history with respect to the STE-70 allocation limit.

Figure 8-1. SLIC Weight History

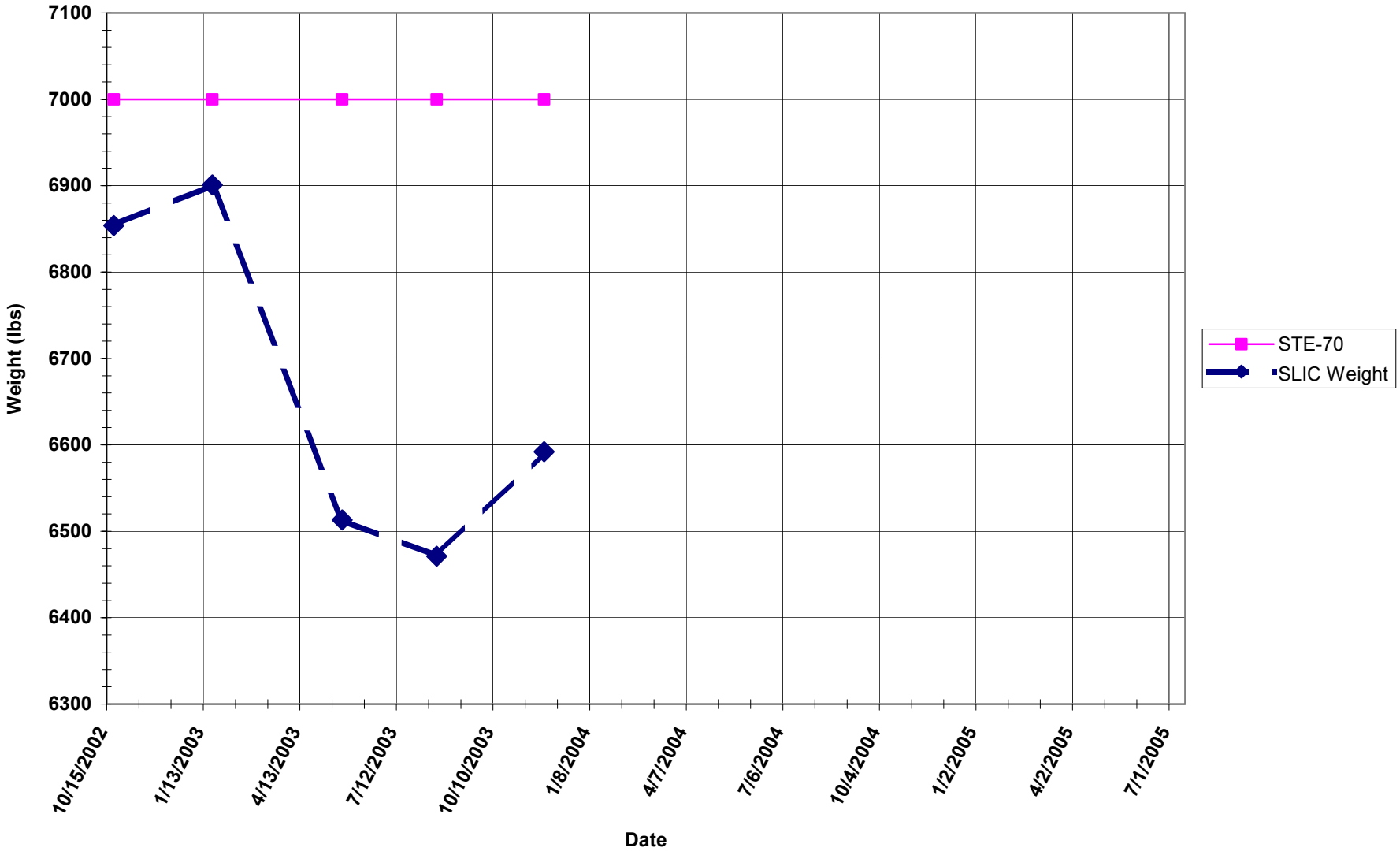

8.1 SLIC Weight Details

This section provides a subsystem level summary weight statement. Table 8-1 documents the detailed component level weights for each cargo element and provides a tabulation of the weight as a function of weight growth. Weight growth allocations are defined below and are categorized as actual, calculated, or estimated. All weight growth allocations are consistent with the mass properties control plan (Reference 4). Table 8-1 also compares previously reported SLIC weights to the current weights.

Weight Class	Definition	Weight Growth
Actual	Reflects actual weighing of the hardware	0.2%
Calculated	Calculated weights derived from released drawings	5.0%
Estimated	Items where the design has yet to mature and weight growth is expected to be greatest	18.0%

Table 8-1. SLIC Weight Details

(Weights include contingency)

Description	Wt. - Last Report (lb)	Current Wt. (lb)	Changes - Last to Current (lb)	Weight Class			Note No. Refer to Section 8.2
				Act (%)	Calc. (%)	Est. (%)	
SLIC Structure							
Pallet and Assoc Hardware	1871.9	1947.9	+76.0	0.0	93.1	6.9	1
Total Structure	**1871.9**	**1947.9**	**+76.0**	**0.0**	**93.1**	**6.9**	
WSIPE & MLI							
WSIPE	666.1	666.1	0.0	0	100	0	-
MLI	23.6	23.6	0.0	0	0	100	-
WSIPE & MLI	**689.7**	**689.7**	**0.0**	**0.0**	**96.6**	**3.4**	
Isolators							
Starboard aft (long)	62.9	62.9	0.0	100	0	0	-
Port aft (long)	62.9	62.9	0.0	100	0	0	-
Starboard forward (long)	62.9	62.9	0.0	100	0	0	-
Port forward (long)	62.9	62.9	0.0	100	0	0	-
Starboard mid-aft (short)	60.8	60.8	0.0	100	0	0	-
Port mid-aft (short)	60.8	60.8	0.0	100	0	0	-
Starboard mid-forward (short)	60.8	60.8	0.0	100	0	0	-
Port mid-forward (short)	60.8	60.8	0.0	100	0	0	-
WSIPE isolator fittings	28.6	28.6	0.0	0	100	0	-
Total Isolators	**523.4**	**523.4**	**0.0**	**94.6**	**5.4**	**0.0**	
COPE							
COPE	270.2	270.2	0.0	0	0	100	-
Total COPE	**270.2**	**270.2**	**0.0**	**0.0**	**0.0**	**100.0**	

Description	Wt. - Last Report (lb)	Current Wt. (lb)	Changes - Last to Current (lb)	Weight Class			Note No. Refer to Section 8.2
				Act (%)	Calc. (%)	Est. (%)	
Avionics							
Harness	59.0	59.0	0.0	0	0	100	-
EPDSU	100.3	100.3	0.0	0	0	100	-
Mounting Plate	17.7	17.7	0.0	0	0	100	-
Total Avionics	**177.0**	**177.0**	**0.0**	**0.0**	**0.0**	**100.0**	
EVA							
Handrails and PFR sockets / EVA placeholder	47.2	177.0	129.8	0	0	100	2
Wide Field handhold stowage	23.6	23.6	0.0	0	0	100	-
Wide Field handhold	53.1	53.1	0.0	0	0	100	-
Total EVA	**123.9**	**253.7**	**129.8**	**0.0**	**0.0**	**100.0**	
Miscellaneous							
MLI	94.4	0.0	-94.4	-	-	-	3
Miscellaneous	**94.4**	**0.0**	**-94.4**	**-**	**-**	**-**	
SLIC ORUs & Misc Hdw.							
WFC3 w/ guide studs (7)	963.6	963.6	0.0	0	100	0	-
Battery, port (45)	459.9	459.9	0.0	100	0	0	-
Battery, starboard (45)	459.9	459.9	0.0	100	0	0	-
Battery mounting plate – stbd	67.2	67.2	0.0	0	100	0	-
Battery mounting plate – port	65.1	65.1	0.0	0	100	0	-
Battery soft enclosure	0.0	11.8	+11.8	0	0	100	4
Battery soft enclosure	0.0	11.8	+11.8	0	0	100	
ASCS Radiator (18	451.5	427.9	-23.6	0	100	0	5
Radiator mounting hardware	76.6	76.6	0.0	0	0	100	-
OCE-EK harness (17)	4.1	4.1	0.0	100	0	0	-
RSU w/ connector caps (36, 39)	24.4	24.4	0.0	100	0	0	-
DSC, spare (42)	16.5	16.5	0.0	0	0	100	-
DSC HMD (44)	2.5	2.5	0.0	0	0	100	-
SRTM, RAGB, adapter (119)	9.0	9.0	0.0	100	0	0	-
MLI repair kit (98)	1.5	1.5	0.0	100	0	0	-
SSRF, qty 7 (65)	47.0	47.0	0.0	100	0	0	-
SSRF stowage pouch	35.4	38.9	+3.5	0	0	100	6
ASCS Rad Sock, lg (23)	11.8	11.8	0.0	0	0	100	-
ASCS Rad Sock, sm (23)	11.8	11.8	0.0	0	0	100	-
ASCS Sock Restraint Strap (24)	0.6	0.6	0.0	0	0	100	-

Description	Wt. - Last Report (lb)	Current Wt. (lb)	Changes - Last to Current (lb)	Weight Class			Note No. Refer to Section 8.2
				Act (%)	Calc. (%)	Est. (%)	
SLIC ORUs & Misc Hdw. (continued)							
Battery Cap Assy (49)	1.2	1.2	0.0	0	0	100	-
CPL Evaporator Brkt (22)	2.4	2.4	0.0	0	0	100	-
AS Bay 4 Cryovent cover (27)	0.0	5.9	+5.9	0	0	100	7
OCE-EK Pouch	2.4	2.4	0.0	0	0	100	-
MLI-RK Pouch	0.6	0.6	0.0	100	0	0	-
Fuse Mod, OTA P25 (69)	0.2	0.2	0.0	100	0	0	-
Fuse Mod, OTA P26 (69)	0.2	0.2	0.0	100	0	0	-
Fuse Mod, OTA P27A (68)	0.4	0.4	0.0	100	0	0	-
Fuse Mod, OTA P28A (68)	0.4	0.4	0.0	100	0	0	-
Fuse Plugs, P15, qty 2 (70)	0.9	0.9	0.0	100	0	0	-
Fuse Plugs, P16 qty 2 (70)	0.9	0.9	0.0	100	0	0	-
Fuse Plugs, P17 qty 2 (70)	0.9	0.9	0.0	100	0	0	-
VIK (50)	1.9	1.9	0.0	100	0	0	-
Total ORUs	**2720.8**	**2730.2**	**9.4**	**37.1**	**55.8**	**7.1**	
Total SLIC Complement	**6471.3**	**6592.1**	**120.8**	**22.9**	**61.1**	**16.0**	

8.2 SLIC Change Analysis

This section provides a summary of changes to the weights and growth allocations documented in Table 8-1.

1. Horizontal Pallet and Vertical Pallet MLI weight was added.
2. Weight estimate for EVA handrails and PFR sockets increased.
3. More specific MLI estimates were added to the horizontal and vertical pallets.
4. Battery soft enclosures added to SLIC weights.
5. Some of the weight listed with the ASCS was accounted for elsewhere.
6. SSRF stowage pouch weight estimate updated.
7. Contingency AS Bay 4 Cryovent cover added to most recent SMEL update.

8.3 SLIC Mass Properties

This section provides a detailed summary of weights, centers of gravity, and inertia properties of the SLIC payload and major components. Overall SLIC mass properties for the mission are reported in Table 8-2 with more detail on individual components found in Appendix C. Figure 2-5 defines the SLIC local axis system in which all mass properties in Table 8-2 are referenced to along with the necessary translation between the SLIC local coordinate system and the Orbiter coordinate system. All mass properties reported in Table 8-2 are centroidal.

Table 8-2. SLIC Mass Properties

Description	Weight [1] (lb)	CG in SLIC Coordinate System (in)			Component Weight Moment of Inertia [2] (slug-ft^2)					
		X	Y	Z	Ixx	Iyy	Izz	Ixy	Ixz	Iyz
SLIC Structure and Ancillary Equipment:										
Pallet	1947.9	-19.8	-0.1	-30.1	1660	584	1838	-1	-79	1
WSIPE	689.7	-31.3	-1.3	7.3	282	198	138	4	-1	13
Isolators	523.4	-31.4	0.0	-1.2	328	98	392	0	0	0
COPE	270.2	13.1	0.0	-66.6	24	8	23	0	0	0
Avionics	177.0	-31.3	63.0	-14.6	1	2	2	0	0	0
EVA	253.7	-8.2	2.4	-61.6	8	2	7	0	0	0
SLIC Payload Items:										
ORUs	2730.2	-22.6	0.3	-6.5	679	1122	1125	0	53	-2
Total SLIC Payload	6592.1	-21.6	1.7	-16.4	3634	2629	3782	-18	-228	9

[1] Weights include contingency.
[2] In forming inertia matrix (inertia tensor), multiply all products by (-1).

8.4 Transformation Matrices

The transformation matrices for defining the orientation of the SLIC Principal Axis (PA) relative to the SLIC geometric axis (GA) system is defined as follows:

$$\begin{vmatrix} 0.8087015 & 0.0232329 & -0.5877612 \\ -0.0202345 & 0.9997276 & 0.0116764 \\ 0.5878721 & 0.0024503 & 0.8089508 \end{vmatrix} \times \begin{vmatrix} X_{SLIC} \\ Y_{SLIC} \\ Z_{SLIC} \end{vmatrix} = \begin{vmatrix} X_{PA} \\ Y_{PA} \\ Z_{PA} \end{vmatrix}$$

The position and orientation of the SLIC axis system (SLICAS) origin in the Orbiter cargo bay defined with respect to the Orbiter Structural Reference System (OSRS) is as follows:

$$\begin{matrix} X_{SLICAS} = 0 \text{ in} & & X_{OSRS} = 833.0 \text{ in} \\ Y_{SLICAS} = 0 \text{ in} & \text{at} & Y_{OSRS} = 0.0 \text{ in} \\ Z_{SLICAS} = 0 \text{ in} & & Z_{OSRS} = 414.0 \text{ in} \end{matrix}$$

The normal orientation of the ORUCAS with respect to the OSRS is as follows:

$$\begin{matrix} X_{SLICAS} \\ Y_{SLICAS} \\ Z_{SLICAS} \end{matrix} = \begin{vmatrix} 1 & 0 & 0 \\ 0 & 1 & 0 \\ 0 & 0 & 1 \end{vmatrix} \begin{matrix} X_{OSRS} \\ Y_{OSRS} \\ Z_{OSRS} \end{matrix}$$

8.5 Pending and Potential Changes

Pending and potential changes to component and system mass properties will be tracked and reported within this section. At this time the SLIC design is not yet finalized so most of the weights are estimates and will all be updated to calculated or actual as time progresses.

8.5.1 Pallet

There are no pending or potential changes at this time.

8.5.2 WSIPE

There are no pending or potential changes at this time.

8.5.3 Isolators

There are no pending or potential changes at this time.

8.5.4 COPE

There are no pending or potential changes at this time.

8.5.5 Avionics

There are no pending or potential changes at this time.

8.5.6 EVA

There are no pending or potential changes at this time.

8.5.7 Miscellaneous

There are no pending or potential changes at this time.

8.5.8 ORUs & Miscellaneous Hardware

There are no pending or potential changes at this time.

8.6 Orbiter Payload Data

Data referenced in this section contains the mass property data required by the PIP Annex 1 for compliance with control weight requirements specified in Reference 3, Section 4.1. This data is also used for Orbiter mission performance planning relative to the current payload weight.

The SLIC weight and cg location, with respect to the Orbiter Reference frame, are listed below along with the STR-126 (Reference 2) mass allocation.

Table 8-3. SLIC CG – Orbiter Coordinates

STR-126 Allocated Weight (lbs)	Weight (lbs)	Center of Gravity (inches)		
		Xo	Yo	Zo
7000	6592	811.4	1.7	397.6

8.7 Weight and Mass Properties Reporting

The SLIC Payload Weight Log will be documented within reports for the carrier system and experiments. These reports delineate a schedule of configuration changes and anticipated weight changes, and will be provided at the following milestones: upon delivery of the payload to the launch site, transfer of the payload to the integration facilities, transfer to the launch pad, and closeout of the Orbiter for flight.

8.8 Weight and Balance Test

Payload weight and balance tests will be witnessed and verified by an independent observer assigned to the NASA/GSFC HST Project Flight Assurance group.

8.9 Weight and Mass Properties Certification

The weight and mass properties certification will be documented as a part of the Flight Readiness Review process.

9 References

1. Memo 03-MTM-7281, SM4 HST Carriers Mass Properties Update 4 of 4 (2003), Michael Mitchell, October 31, 2003.

2. NASA/GSFC Document STR-126, Baseline Issue, “Hubble Space Telescope Fourth Servicing Mission (SM4) Level III Flight Systems and Servicing Project (FS&SP) Requirements” Change Request.

3. NASA/JSC Document NSTS-14009, Revision K, “Hubble Space Telescope Payload Integration Plan”, Change 8, 1/25/02.

4. SMR-4091, HST Mass Properties Control Plan, July 9, 2002.

5. STE-72, HST ORUC Carrier Contract End Item Specification.

6. STE-70, HST SLIC Carrier Contract End Item Specification, November 15, 2002.

7. STE-68, HST FSS Carrier Contract End Item Specification.

8. NASA/JSC Document NSTS-21000-A01, Revision I, “Data Requirements for the Payload Data Package Annex”, June 1993.

9. LMSC/F297147A, HST Mass Properties Report, March 23, 1990.

10. LMSC/P075392, HST First Servicing Mission Mass Properties Report, October 31, 1993.

11. LMMS/P470420, HST SM2 Mass Properties Report, Report No. 7, January 30, 1997.

12. LMMS/P506548, HST SM3A Mass Properties Report, Report No. 2, August 2, 1999.

13. LMMS/P564090, HST SM3B Mass Properties Report, Report No. 7, February 21, 2002.

14. CRYO-127, Results of Dewar Cryogen Fill, March 29, 1996.

15. A16-ST-2269, FGS-3R Mass Properties, A.Cappiello, May 23, 2003.

16. EM: FS&S 1557, HST On-Orbit Structural Dynamics Model for SM4 Partially Correlated Configurations for PCS, W. Eskew, August 9, 2002.

17. IN0048-1027M, Mass Properties Status Report for NICMOS, D. R. Debevec, Ball Aerospace Systems Division, January 3, 1997.

18. SMR-1092, HST Aft Shroud/OTA/SI Metrology Book, Part II Appendices, Figure 5-1,December 18, 1992.

19. SM4 EVA Timeline, October 18, 2002.

20. Servicing Mission Equipment List (SMEL), Baseline, Rev. 4, dated 9/26/03.

21. LN#000983, WF/PC-II Acceptance Data Package, Item 5, Mass Properties, Weight and Balance Report, 5/25/93.

10 Acronyms

AMSB	Advanced Mechanism Selection Box
APE	Articulating Portable Foot Restraint Extender
ASCS	Aft Shroud Cooling System
ASIPE	Axial Science Instrument Protective Enclosure
ASLR	Aft Shroud Latch Repair Kit
ATM	Auxiliary Transport Module
BAPS	Berthing and Positioning System
BSP	Berthing and Positioning System Support Post
CATs	Crew Aids and Tools
CCTV	Closed Circuit Television
CDU	Command Detector Unit
CEI	Contract End Item
CG	Center of gravity
COPE	Contingency Orbital Replacement Unit Protective Enclosure
COS	Cosmic Origins Spectrograph
COSTAR	Corrective Optics Space Telescope Axial Replacement
DSC	DMU SIC&DH Cross Strap Harness
DSE	Door Stop Extension
ECU	Electronics Control Unit
EPDSU	Enhanced Power Distribution and Switching Unit
ESM	Electronics Support Module
EVA	Extra-Vehicular Activity
FMDM	Flexible Multiplexer Demultiplexer
FSS	Flight Support System
FSSAS	Flight Support System Axis System
GA	Geometric Axis

GF	Grapple Fixture
GFAS	Grapple Fixture Axis System
GFS1	Grapple Fixture System 1
GFS2	Grapple Fixture System 2
GSE	Ground Support Equipment
GSFC	Goddard Space Flight Center
HGA	High Gain Antenna
HMD	Harness Management Device
HST	Hubble Space Telescope
ICD	Interface Control Document
JSC	Johnson Space Center
KSC	Kennedy Space Center
LGA	Low Gain Antenna
LIS	Load Isolation System
LMSC	Lockheed Missiles & Space Company
LMMS	Lockheed Martin Missiles & Space
LMSSC	Lockheed Martin Space Systems Company
MLI	Multilayer Insulation
NAS	National Academy of Science
NASA	National Aeronautics and Space Administration
NOBL	New Outer Blanket Layer
NSTS	NASA Space Transportation System (Shuttle)
ORI	Orbital Replacement Instrument
ORU	Orbital Replacement Unit
ORUC	Orbital Replacement Unit Carrier
ORUCAS	Orbital Replacement Unit Carrier Axis System
OSRS	Orbiter Structural Reference System

PA	Principal Axis
PAS	Payload Axis System
PCU	Power Control Unit
PDRS	Payload Deployment and Retrieval System
PFR	Portable Foot Restraint
PIP	Payload Integration Plan
RSU	Rate Sensing Unit
SA3	Solar Array 3
SI	Scientific Instrument
SIP	Shuttle Interface Panel
SLIC	Super Lightweight Integrated Carrier
SLICAS	Super Lightweight Integrated Carrier Axis System
SM3A	Servicing Mission 3A
SM3B	Servicing Mission 3B
SM4	Servicing Mission 4
SMEL	Servicing Mission Equipment List
SOPE	Small ORU Protective Enclosure
SSE	Space Support Equipment
SSP	Space Shuttle Program
STIK	STIS Thermal Interface Kit
STIS	Space Telescope Imaging Spectrograph
STR	Space Telescope Requirements
STS	Shuttle Transportation System
TSA	Temporary Stowage Assembly
WFC3	Wide Field Camera 3
WFPC II	Wide Field Planetary Camera 2

Appendix A. FSS Mass Properties

HST SM4 - FSS MASS PROPS (NOVEMBER 18, 2003)

ITEM	%	WT lb	X cg	Y cg	Z cg	Ix	Iy	Iz
			-------- in --------			------ lb-in2 ------		
FSS MASS PROPERTIES - STRUCTURE ONLY - BAPS VERTICAL								
STRUCTURE								
CRADLE A	0	1592.0	100.0	.0	84.4	8170000	2850000	5430000
LATCH BEAM	0	277.0	100.0	.0	70.1	263879	27696	248002
STARBOARD TRUNNION	0	35.9	100.0	92.3	114.0	298	97	298
PORT TRUNNION	0	35.9	100.0	-92.3	114.0	298	97	298
KEEL TRUNNION	0	34.6	100.0	.0	6.6	320	320	92

STRUCTURE

	X=	100.0 in	Ix=	2025 sl-ft2	Ixy=	0 sl-ft2
Wt.= 1979.4 lb	Y=	.0 in	Iy=	691 sl-ft2	Ixz=	0 sl-ft2
Inc 4.0 cont	Z=	82.1 in	Iz=	1360 sl-ft2	Iyz=	0 sl-ft2

TOTAL SAVED (Label 2000)

------ REGISTERS CLEARED

AVIONICS								
FMDM A	0	19.5	100.6	-29.6	89.6	147	368	350
Delta POI (lb-in2)						0	0	23
FMDM B	0	19.5	100.6	-21.6	84.0	147	368	350
Delta POI (lb-in2)						0	0	23
EPDSU1	0	116.4	113.5	71.5	105.0	6761	3453	5248
EPDSU2	0	116.4	100.0	-26.4	53.8	5248	3804	6410
Delta POI (lb-in2)						0	0	-1018
J-BOX	0	10.0	112.5	57.0	105.0	243	267	83
AMSB	5	23.6	100.0	.0	49.0	409	323	480
SPCU	0	126.9	111.5	65.0	126.0	12225	3225	10036
PPCU	0	127.7	111.5	-65.0	126.0	12302	3246	10099
IPCU	0	50.9	113.0	-64.5	102.5	1909	1379	1379
J-BOX/PDSU PLATE	0	10.2	108.3	68.0	105.0	942	276	667
EPDSU BRACKET	0	5.7	112.5	70.5	90.1	210	12	221
EPDSU PLATE & RAD	18	15.0	97.6	-25.0	59.7	513	509	836
Delta POI (lb-in2)						-68	-71	-111
FMDM PLATE	18	30.0	100.0	-27.4	83.8	2251	1344	2187
Delta POI (lb-in2)						0	0	-1043
ORUC I/F	0	8.8	99.0	13.8	77.1	243	103	142
Delta POI (lb-in2)						0	0	48
BSP HARN BRACKET	0	3.6	99.0	-46.5	53.0	2	2	2

AVIONICS

	X=	107.8 in	Ix=	591 sl-ft2	Ixy=	17 sl-ft2
Wt.= 694.7 lb	Y=	1.6 in	Iy=	127 sl-ft2	Ixz=	21 sl-ft2
Inc 10.5 cont	Z=	97.9 in	Iz=	477 sl-ft2	Iyz=	49 sl-ft2

TOTAL SAVED (Label 2010)

------ REGISTERS CLEARED

EVA

KEEL PFR BRACKET	0	1.3	91.8	.0	16.0	3	1	2
PFR SOCKET - UPPER STBD	0	.9	91.5	54.0	151.0	1	0	1
PFR SOCKET - UPPER PRT F	0	.9	91.5	-54.0	151.0	1	0	1
PFR SOCKET - LOWER STBD	0	.9	91.5	60.0	110.0	1	0	1
PFR SOCKET - LOWER PRT F	0	.9	91.5	-60.0	110.0	1	0	1
PFR SOCKET - KEEL FORWAR	0	.9	91.0	.0	16.0	1	0	1
STBD LOWER HANDRAIL	0	8.6	90.5	30.0	26.8	2520	561	1988
Delta POI (lb-in2)						4	-7	943
PORT LOWER HANDRAIL	0	8.6	90.5	-30.7	26.6	2617	561	2085
Delta POI (lb-in2)						-1	-9	-964
STBD MIDDLE HANDRAIL	0	6.7	89.7	58.4	57.5	580	479	106
Delta POI (lb-in2)						0	0	222
STBD OUTSIDE HANDRAIL	0	16.0	90.8	76.0	99.4	7990	7871	171
Delta POI (lb-in2)						-9	-125	178
PORT OUTSIDE HANDRAIL	0	16.0	90.8	-77.5	99.6	8062	7942	172
Delta POI (lb-in2)						19	-120	-137
STBD INSIDE HANDRAIL	0	2.4	91.2	55.8	96.7	189	30	212
Delta POI (lb-in2)						-32	-7	18
STBD TOP HANDRAIL	0	3.6	100.0	54.5	157.6	2	70	68
PORT TOP HANDRAIL	0	3.6	100.0	-55.0	157.6	2	70	68
ANGLE HANDRAIL	0	3.0	99.0	71.5	145.0	101	80	70
Delta POI (lb-in2)						19	-18	-49
81 - APE	0	11.4	109.5	-53.5	151.5	17	17	17
121 - 90 DEGREE CONV	0	2.7	93.5	-58.5	111.5	4	4	4
124 - LGA COVER	0	20.8	80.0	-13.6	24.8	645	558	596
Delta POI (lb-in2)						0	0	-43
125 - FSS BAR & STOW	18	9.0	110.0	56.0	153.0	24	24	24
136 - HST PFR	0	45.4	88.4	-58.2	133.0	1798	952	898
Delta POI (lb-in2)						-17	0	0

EVA

		X=	91.9 in	Ix=	192 sl-ft2	Ixy=	3 sl-ft2
Wt.=	165.5 lb	Y=	-14.5 in	Iy=	89 sl-ft2	Ixz=	9 sl-ft2
Inc	1.9 cont	Z=	100.1 in	Iz=	108 sl-ft2	Iyz=	-16 sl-ft2

TOTAL SAVED (Label 2030)

------ REGISTERS CLEARED

BAPS

1) PIVOTING COMPONENTS

BASE RING	0	340.0	100.0	.0	147.0	0	0	0
BERTHING LATCH 1	0	45.6	90.7	.0	110.7	276	467	461
Delta POI (lb-in2)						0	25	0
BERTHING LATCH 2	0	45.6	90.7	32.1	165.3	276	463	465
Delta POI (lb-in2)						21	12	2
BERTHING LATCH 3	0	45.6	90.7	-32.1	165.3	276	463	465
Delta POI (lb-in2)						-21	12	-2
TRANSLATOR HOUSING - POR	0	24.8	100.0	-26.2	178.8	307	529	587

Delta POI (lb-in2)						0	0	75
TRANSLATOR HOUSING - STA	0	24.8	100.0	26.2	178.8	307	529	587
Delta POI (lb-in2)						0	0	-75
SILL PLATE 1	0	6.3	96.0	32.4	165.7	145	91	56
Delta POI (lb-in2)						0	0	-30
SILL PLATE 2	0	6.3	96.0	.2	110.8	145	39	108
SILL PLATE 3	0	9.7	96.0	-31.8	165.5	328	221	109
Delta POI (lb-in2)						0	0	97
TRANSLATOR SHAFT-PORT	0	2.2	105.5	-14.3	183.0	149	0	149
TRANSLATOR SHAFT-STBD	0	2.2	105.5	14.3	183.0	149	0	149
TRANSLATOR & CDU	0	20.7	107.0	-1.1	183.5	180	136	194
Delta POI (lb-in2)						-59	0	0
CABLE REEL	0	55.7	107.6	-3.6	144.9	24285	11596	14090
Delta POI (lb-in2)						556	320	2163
CABLES	0	19.5	110.3	.0	147.0	1404	709	709
CCTV W/ PRISM	0	25.0	103.5	-19.9	133.7	750	600	300
Delta POI (lb-in2)						0	0	-260
BAPS RADIAL HANDRAIL 1	18	2.5	100.5	13.1	108.9	13	3	11
Delta POI (lb-in2)						0	0	2
BAPS RADIAL HANDRAIL 2	18	3.0	100.5	-11.8	108.4	58	6	53
Delta POI (lb-in2)						0	0	-14
BAPS HANDRAIL	0	3.1	106.0	-6.0	111.4	28	4	28
Delta POI (lb-in2)						0	0	-7
BAPS HANDRAIL	0	3.1	106.0	37.4	145.0	28	28	4
Delta POI (lb-in2)						0	0	7
BAPS HANDRAIL	0	3.1	106.0	-34.8	157.0	28	29	3
Delta POI (lb-in2)						0	0	5
BAPS POST BRKT	0	2.3	105.1	.0	110.0	8	8	3
UMBILICAL ACTUATOR	0	25.6	92.7	-26.5	122.3	270	248	224
Delta POI (lb-in2)						13	-19	-33
DEPLOY/RETURN UMBILICAL	0	21.6	92.4	-1.2	112.0	634	144	694
Delta POI (lb-in2)						-45	0	0
ROTATOR & CDU	0	36.2	101.0	40.1	134.2	203	351	342
Delta POI (lb-in2)						29	-8	3
BAPS MLI	0	35.9	99.8	.0	147.0	25920	12961	12961

BAPS PIVOTING COMPONENT

	X=	99.1 in	Ix=	120 sl-ft2	Ixy=	1 sl-ft2
Wt.= 812.3 lb	Y=	-.1 in	Iy=	67 sl-ft2	Ixz=	3 sl-ft2
Inc 1.9 cont	Z=	146.8 in	Iz=	64 sl-ft2	Iyz=	1 sl-ft2

TOTAL SAVED (Label 2040)

------ REGISTERS CLEARED

2) NON-PIVOTING COMPONENTS

PIVOTER STRUT	0	64.5	100.0	-41.0	159.7	8261	8408	1402
Delta POI (lb-in2)						0	0	2022
BAPS STRUT	0	50.3	100.0	41.1	158.7	6443	6557	1093
Delta POI (lb-in2)						0	0	-1577
STUB SHAFT	0	16.8	100.0	-34.0	175.0	99	19	99
PIVOTER	0	91.2	100.0	36.3	175.0	1262	2072	1279
BSP BRACKET	0	8.9	97.9	-34.2	34.3	37	80	85
Delta POI (lb-in2)						-3	-8	-2
BSP BRACKET	0	8.9	97.9	33.9	34.6	37	80	85
Delta POI (lb-in2)						3	-8	2
BSP	0	46.0	97.0	-.2	39.0	15008	148	15002
Delta POI (lb-in2)						0	0	13

```
PRELOAD RELEASE BRACKET   0      6.4   100.5      .0    68.4      25      27      24
 Delta POI (lb-in2)                                                 0       2       0


BAPS NON-PIVOTING COMPONENT
                   X=    99.4 in  Ix=       268 sl-ft2  Ixy=        0 sl-ft2
Wt.=   293.6 lb    Y=     7.3 in  Iy=       192 sl-ft2  Ixz=        4 sl-ft2
Inc       .6 cont  Z=   136.6 in  Iz=        77 sl-ft2  Iyz=       20 sl-ft2
TOTAL SAVED  (Label 2050)


------ REGISTERS CLEARED

 BAPS ASSEMBLY TOTAL

                          %       lb    -------- in --------    ------ sl-ft2 ------

{2040}BAPS PIVOTING COMP  0    812.3    99.1     -.1   146.8     120      67      64
 Delta POI (sl-ft2)                                                 1       3       1
{2050}BAPS NON-PIVOTING   0    293.6    99.4     7.3   136.6     268     192      77
 Delta POI (sl-ft2)                                                 0       4      20

BAPS ASSEMBLY TOTAL
                   X=    99.2 in  Ix=       396 sl-ft2  Ixy=        1 sl-ft2
Wt.=  1105.9 lb    Y=     1.9 in  Iy=       264 sl-ft2  Ixz=        6 sl-ft2
Inc      2.5 cont  Z=   144.1 in  Iz=       144 sl-ft2  Iyz=       17 sl-ft2
TOTAL SAVED  (Label 2065)


------ REGISTERS CLEARED

 STIK INSTALLATION

                          %       lb    -------- in --------    ------ lb-in2 ------

STIK HANDRAIL            18      3.0    89.7   -48.0    62.0     197     197       1
 Delta POI (lb-in2)                                                -1       0       0
19 - STIK                 0     60.0    89.1   -65.9    70.8    6636    6248     588
 Delta POI (lb-in2)                                               -18     152     624
STIK ENCLOSURE            0     97.0    88.6   -63.7    67.5   25694   20847   10508
 Delta POI (lb-in2)                                               259       0       0


STIK INSTALLATION
                   X=    88.8 in  Ix=         7 sl-ft2  Ixy=        0 sl-ft2
Wt.=   160.9 lb    Y=   -64.2 in  Iy=         6 sl-ft2  Ixz=        0 sl-ft2
Inc       .9 cont  Z=    68.6 in  Iz=         3 sl-ft2  Iyz=       -0 sl-ft2
TOTAL SAVED  (Label 2070)


------ REGISTERS CLEARED

 MISC

DOWNLOCK & CDU            0     97.9   100.0    36.1   112.9    2511    2081    1642
 Delta POI (lb-in2)                                                 0       0    -202
DOWNLOCK BRACKET          0     46.4   100.0    42.1   107.3    1488    1838    1630
 Delta POI (lb-in2)                                                 0       0     317
APC LATCH & PFR MOUNTING  0     26.4    90.0   -59.6   135.2     577     161     455
 Delta POI (lb-in2)                                                 0       0     -15
```

APC LATCH PLATE	0	19.3	91.8	-58.5	133.0	1166	316	851
SIP TRANSITION BRACKET	0	3.9	109.7	79.5	93.3	8	11	8
Delta POI (lb-in2)						0	3	0
OUTRIGGER CLEVIS-OUTBOAR	0	5.1	91.5	-83.5	77.5	11	11	1
OUTRIGGER CLEVIS-OUTBOAR	0	5.1	91.5	83.5	77.5	11	11	1
OUTRIGGER CLEVIS-INBOARD	0	4.6	91.5	-68.5	77.5	10	10	1
OUTRIGGER CLEVIS-INBOARD	0	4.6	91.5	68.5	77.5	10	10	1
HARNESSES	0	441.6	100.0	.0	83.5	949876	130016	820744
MLI	0	38.6	100.0	-.5	87.5	168270	11007	159817
72 - CDU CABLE HARNESSS	1	.2	91.5	18.5	67.0	1	0	1

MISC

		X=	99.2 in	Ix=	387 sl-ft2	Ixy=	7 sl-ft2
Wt.=	694.2 lb	Y=	4.4 in	Iy=	70 sl-ft2	Ixz=	-3 sl-ft2
Inc	.5 cont	Z=	92.7 in	Iz=	321 sl-ft2	Iyz=	-3 sl-ft2

TOTAL SAVED (Label 2080)

------ REGISTERS CLEARED

FSS SYSTEM TOTAL (W/O UNCERTAINTY)

	%	lb	-------- in --------			------ sl-ft2 ------		
{2000}STRUCTURE	0	1979.4	100.0	.0	82.1	2025	691	1360
Delta POI (sl-ft2)						0	0	0
{2010}AVIONICS	0	694.7	107.8	1.6	97.9	591	127	477
Delta POI (sl-ft2)						17	21	49
{2030}EVA	0	165.5	91.9	-14.5	100.1	192	89	108
Delta POI (sl-ft2)						3	9	-16
{2065}BAPS ASSEMBLY TOTA	0	1105.9	99.2	1.9	144.1	396	264	144
Delta POI (sl-ft2)						1	6	17
{2070}STIK INSTALLATION	0	160.9	88.8	-64.2	68.6	7	6	3
Delta POI (sl-ft2)						0	0	-0
{2080}MISC	0	694.2	99.2	4.4	92.7	387	70	321
Delta POI (sl-ft2)						7	-3	-3

FSS - (W/O UNCERTAINTY)

		X=	100.2 in	Ix=	4395 sl-ft2	Ixy=	58 sl-ft2
Wt.=	4800.6 lb	Y=	-1.3 in	Iy=	1907 sl-ft2	Ixz=	35 sl-ft2
Inc	20.3 cont	Z=	100.4 in	Iz=	2582 sl-ft2	Iyz=	132 sl-ft2

TOTAL SAVED (Label 3030)

------ REGISTERS CLEARED

DIRECTION COSINES			CORRESPONDING ANGLES		
.9995934	-.0223606	-.0177109	1.634	91.281	91.015
.0252785	.9820712	.1868110	88.551	10.866	79.233
.0132161	-.1871827	.9822368	89.243	100.788	10.815

PRINCIPAL MOIs = 4396.888 1880.68 2606.579 (sl-ft2)

{3030}FSS - (W/O UNCERT	0	4800.6	100.2	-1.3	100.4	4395	1907	2582
Delta POI (sl-ft2)						58	35	132

Mass Properties Translated by 1075.2 0 300

FSS-BAPS (W/O UNCERTAINTY) IN ORBITER COORDINATES

```
                  X=  1175.4 in  Ix=      4395 sl-ft2  Ixy=       58 sl-ft2
Wt.=  4800.6 lb    Y=    -1.3 in  Iy=      1907 sl-ft2  Ixz=       35 sl-ft2
Inc     20.3 cont  Z=   400.4 in  Iz=      2582 sl-ft2  Iyz=      132 sl-ft2
TOTAL SAVED  (Label 3035)


------ REGISTERS CLEARED

 GSE
                          %       lb    -------- in --------    ------ lb-in2 ------

OUTRIGGER ASSY STBD       0    105.0    80.0    77.5   110.0       0       0       0
OUTRIGGER ASSY PORT       0    105.0    80.0   -77.5   110.0       0       0       0
SIP SUPPORT STBD          0     12.0   120.0    82.5   115.0       0       0       0
SIP SUPPORT PORT          0     12.0   120.0   -82.5   115.0       0       0       0

GSE
                  X=    84.1 in  Ix=       308 sl-ft2  Ixy=        0 sl-ft2
Wt.=   234.0 lb    Y=      .0 in  Iy=         8 sl-ft2  Ixz=        1 sl-ft2
                  Z=   110.5 in  Iz=       315 sl-ft2  Iyz=        0 sl-ft2
TOTAL SAVED  (Label GSE)

------ REGISTERS CLEARED
                          %       lb    -------- in --------    ------ sl-ft2 ------

{3030}FSS -  (W/O UNCERT  0   4800.6   100.2    -1.3   100.4    4395    1907    2582
 Delta POI (sl-ft2)                                               58      35     132
{GSE}GSE                  0    234.0    84.1      .0   110.5     308       8     315
 Delta POI (sl-ft2)                                                0       1       0

FSS WITH GSE
                  X=    99.4 in  Ix=      4708 sl-ft2  Ixy=       57 sl-ft2
Wt.=  5034.6 lb    Y=    -1.3 in  Iy=      1932 sl-ft2  Ixz=       28 sl-ft2
Inc     20.3 cont  Z=   100.9 in  Iz=      2909 sl-ft2  Iyz=      133 sl-ft2
TOTAL SAVED  (Label FSS GSE)

------ REGISTERS CLEARED
***************************************************************************
 CONVERT TOTAL FSS MASS PROPS FROM SLUG-FT2 TO LB-IN2 FOR SEQ OF EVENTS **
***************************************************************************
{3030}FSS -  (W/O UNCERT  0   4800.6   100.2    -1.3   100.4    4395    1907    2582
 Delta POI (sl-ft2)                                               58      35     132

FSS TOTAL LB-IN2
                  X=   100.2 in  Ix=  20362120 lb-in2  Ixy=   268895 lb-in2
Wt.=  4800.6 lb    Y=    -1.3 in  Iy=   8836960 lb-in2  Ixz=   162728 lb-in2
Inc     20.3 cont  Z=   100.4 in  Iz=  11961660 lb-in2  Iyz=   613720 lb-in2
TOTAL SAVED  (Label FSSLBIN2)

------ REGISTERS CLEARED
```

Appendix B. ORUC Mass Properties

HST SM4 - ORUC MASS PROPS (NOVEMBER 19, 2003)

ITEM	%	WT lb	X cg	Y cg	Z cg	Ix	Iy	Iz
			-------- in --------			------ lb-in2 ------		
ORUC PALLET								
SPACELAB PALLET & KEEL	0	1449.7	-29.4	.0	-57.6	5211310	2339000	5956510
Delta POI (lb-in2)						0	-1907	0

PALLET

	X=	-29.4 in	Ix=	1127.1 sl-ft2	Ixy=	0 sl-ft2		
Wt.= 1452.6 lb	Y=	.0 in	Iy=	505.9 sl-ft2	Ixz=	-0 sl-ft2		
Inc 2.9 cont	Z=	-57.6 in	Iz=	1288.2 sl-ft2	Iyz=	0 sl-ft2		

TOTAL SAVED (Label 100)

------ REGISTERS CLEARED

AVIONICS								
AVIONICS PANEL - STBD	0	11.9	27.5	20.7	-79.5	1822	320	1504
Delta POI (lb-in2)						0	0	-106
PRJU	0	9.4	31.5	14.0	-78.5	0	0	0
SAAMD & MOUNTING PLATE	0	3.7	15.0	-30.0	-69.0	8	13	18
Delta POI (lb-in2)						0	0	-2
HARNESS	0	21.1	28.0	-3.5	-88.0	6335	11	6335

AVIONICS

	X=	27.5 in	Ix=	4.2 sl-ft2	Ixy=	0 sl-ft2		
Wt.= 46.2 lb	Y=	4.2 in	Iy=	.6 sl-ft2	Ixz=	-0 sl-ft2		
Inc .1 cont	Z=	-82.3 in	Iz=	4.0 sl-ft2	Iyz=	0 sl-ft2		

TOTAL SAVED (Label 110)

------ REGISTERS CLEARED

LIS (UNSPRUNG)								
LIS CRADLE	0	709.7	-29.5	.0	-47.6	1327950	564731	1121020
TORQUE TUBE BRACKETS	0	20.0	-29.5	.0	-66.0	15200	24192	39272
STRUTS	0	71.4	-29.5	.0	-37.4	204792	155005	296820
Delta POI (lb-in2)						-1558	81	0
TORQUE TUBE - STBD	0	19.7	-28.7	27.9	-60.1	141	14345	14394
Delta POI (lb-in2)						-7	-94	1
TORQUE TUBE - PORT	0	19.7	-30.3	-27.9	-59.9	166	15178	15198
Delta POI (lb-in2)						-6	94	1
Z SPRING ROLLER TRACKS-F	0	64.0	-62.0	.0	-31.0	119915	1067	119915
Z SPRING ROLLER TRACKS-A	0	64.0	3.0	.0	-31.0	119915	1067	119915

LIS (UNSPRUNG)

	X=	-29.5 in	Ix=	404.5 sl-ft2	Ixy=	-0 sl-ft2

```
Wt.=   970.4 lb    Y=      .0 in  Iy=     208.1 sl-ft2  Ixz=        0 sl-ft2
Inc      1.9 cont  Z=   -45.5 in  Iz=     409.3 sl-ft2  Iyz=       -0 sl-ft2
TOTAL SAVED  (Label 120)


------ REGISTERS CLEARED

 LIS (SPRUNG MASS)

Z SPRING - STBD           0     39.8   -29.5    42.0   -25.5     123   13588   13705
Z SPRING - PORT           0     39.8   -29.5   -42.0   -25.5     123   13588   13705
BLOCK ASSEMBLY - STBD     0    128.3   -29.5    44.0   -13.0    3806    4277    2609
BLOCK ASSEMBLY - PORT     0    128.3   -29.5   -44.0   -13.0    3806    4277    2609
Y SPRING (2) - STBD       0      9.3   -29.5    38.8   -13.5      20    1101    1082
Y SPRING (2) - PORT       0      9.3   -29.5   -38.8   -13.5      20    1101    1082
Z SPRING SPACER - STBD    0      7.6   -29.5    42.0   -23.0      33      33      46
Z SPRING SPACER - PORT    0      7.6   -29.5   -42.0   -23.0      33      33      46
MID Z SPRING SUPPORT PLA  0     12.7   -29.5    42.0   -26.5      39      39      76
MID Z SPRING SUPPORT PLA  0     12.7   -29.5   -42.0   -26.5      39      39      76
LIS PUSHRODS - PORT       0      6.9   -29.5   -38.0   -38.0    1016   14073   13060
LIS PUSHRODS - STBD       0      6.9   -29.5    38.0   -38.0    1016   14073   13060


LIS (SPRUNG MASS)
                   X=   -29.5 in  Ix=     169.9 sl-ft2  Ixy=        0 sl-ft2
Wt.=   410.0 lb    Y=      .0 in  Iy=      18.4 sl-ft2  Ixz=        0 sl-ft2
Inc       .8 cont  Z=   -17.5 in  Iz=     176.9 sl-ft2  Iyz=        0 sl-ft2
TOTAL SAVED  (Label 130)

------ REGISTERS CLEARED
                          %       lb    -------- in --------    ------ sl-ft2 ------

{120}LIS (UNSPRUNG)       0    970.4   -29.5      .0   -45.5     404     208     409
 Delta POI (sl-ft2)                                              -0       0      -0
{130}LIS (SPRUNG MASS)    0    410.0   -29.5      .0   -17.5     170      18     177


LIS
                   X=   -29.5 in  Ix=     623.3 sl-ft2  Ixy=       -0 sl-ft2
Wt.=  1380.5 lb    Y=      .0 in  Iy=     275.4 sl-ft2  Ixz=        0 sl-ft2
Inc      2.8 cont  Z=   -37.2 in  Iz=     586.2 sl-ft2  Iyz=       -0 sl-ft2
TOTAL SAVED  (Label 140)


------ REGISTERS CLEARED

 SHELF

                          %       lb    -------- in --------    ------ lb-in2 ------

STARBOARD SHELF           0    151.1   -30.0    67.0    10.5   16331  136204  152510
OUTBOARD SHELF HANDRAIL   0     10.2   -29.8    83.5    13.4       3    9050    9048
STRUTS                    0     85.8   -29.5    61.6    -9.8   25839  101599   87541
 Delta POI (lb-in2)                                                0       0    5111
PIP PIN BRKT & PIP PINS  18     10.0   -80.6    66.8     9.0     914      17     911
 Delta POI (lb-in2)                                               -0      -3      -2


SHELF
                   X=   -32.1 in  Ix=      15.6 sl-ft2  Ixy=       -0 sl-ft2
```

```
Wt.=   259.4 lb    Y=    65.9 in  Iy=      64.8 sl-ft2  Ixz=       -1 sl-ft2
Inc      2.3 cont  Z=     3.8 in  Iz=      61.4 sl-ft2  Iyz=        3 sl-ft2
TOTAL SAVED  (Label 145)


------ REGISTERS CLEARED

ASIPE

ASIPE BOX STRUCTURE       0    796.2     1.0      .0   -15.4  666000 1043630 1412240
ASIPE A LATCH             0      5.5   -51.0   -12.5   -29.5      23      12      12
ASIPE B LATCH             0     31.0    48.5   -14.0   -31.0     140     328     328
ASIPE C LATCH             0      5.3   -51.0     6.1    -8.8      20      10      10
 Delta POI (lb-in2)                                                 0       0       6
ASIPE TRUNNION - PORT     0     30.5   -29.5   -39.0   -13.0     254     114     186
ASIPE TRUNNION - STBD     0     30.5   -29.5    39.0   -13.0     254     114     186
Y SPRING TRACK - PORT     0     18.0   -29.5   -37.5   -13.5      92    4961    4944
Y SPRING TRACK - STBD     0     18.0   -29.5    37.5   -13.5      92    4961    4944
PUSHROD BRACKETS - STBD   0     12.0   -29.5    36.0   -15.0      29   22736   22715
PUSHROD BRACKETS - PORT   0     12.0   -29.5   -36.0   -15.0      29   22736   22715


ASIPE
                   X=    -1.9 in  Ix=     185.5 sl-ft2  Ixy=       -4 sl-ft2
Wt.=   960.9 lb    Y=     -.5 in  Iy=     283.9 sl-ft2  Ixz=       -6 sl-ft2
Inc      1.9 cont  Z=   -15.7 in  Iz=     400.8 sl-ft2  Iyz=        2 sl-ft2
TOTAL SAVED  (Label 150)


------ REGISTERS CLEARED

FSIPE

FSIPE BOX                 0    441.5   -71.0      .0      .7       0       0       0
FSIPE COVER               0    160.0   -88.0      .0    -1.7  217711  135528   82453


FSIPE
                   X=   -75.5 in  Ix=      47.2 sl-ft2  Ixy=        0 sl-ft2
Wt.=   602.7 lb    Y=      .0 in  Iy=      36.8 sl-ft2  Ixz=        1 sl-ft2
Inc      1.2 cont  Z=      .1 in  Iz=      25.2 sl-ft2  Iyz=        0 sl-ft2
TOTAL SAVED  (Label 151)


------ REGISTERS CLEARED

 OPES (INLCUDING ASSOC H/W NPE AND ATM)

 SOPE STRUCTURE

SOPE                      0    282.4    -8.0    63.0    21.0   38310  110751  116271
 Delta POI (lb-in2)                                                -1      -4      40


SOPE
                   X=    -8.0 in  Ix=       8.3 sl-ft2  Ixy=       -0 sl-ft2
Wt.=   283.0 lb    Y=    63.0 in  Iy=      24.0 sl-ft2  Ixz=       -0 sl-ft2
Inc       .6 cont  Z=    21.0 in  Iz=      25.1 sl-ft2  Iyz=        0 sl-ft2
TOTAL SAVED  (Label 153)
```

```
------ REGISTERS CLEARED

 TOTAL NPE/ATM

NOBL ENCLOSURE           18    150.0   -34.4   -63.2   -16.7   34250   89958   66792
 Delta POI (lb-in2)                                                  0       0  -11995
ATM1 & TRANSPORT MODULES  0     94.2    36.0    53.1   -60.1   13306   10772   10772
ATM2 & TRANSPORT MODULES  0     94.0    36.0   -53.1   -60.9   13278   10749   10749


NPE/ATM
                   X=     1.9 in  Ix=     245.9 sl-ft2  Ixy=       88 sl-ft2
Wt.=   365.6 lb    Y=   -30.6 in  Iy=     163.0 sl-ft2  Ixz=      -61 sl-ft2
Inc     27.4 cont  Z=   -39.3 in  Iz=     313.0 sl-ft2  Iyz=      -57 sl-ft2
TOTAL SAVED  (Label 154)


------ REGISTERS CLEARED

                          %       lb    -------- in --------    ------ sl-ft2 ------

{153}SOPE                 0    283.0    -8.0    63.0    21.0       8      24      25
 Delta POI (sl-ft2)                                              -0      -0       0
{154}NPE/ATM              0    365.6     1.9   -30.6   -39.3     246     163     313
 Delta POI (sl-ft2)                                              88     -61     -57


OPES
                   X=    -2.4 in  Ix=     680.8 sl-ft2  Ixy=       56 sl-ft2
Wt.=   648.5 lb    Y=    10.3 in  Iy=     315.5 sl-ft2  Ixz=      -81 sl-ft2
Inc     27.9 cont  Z=   -13.0 in  Iz=     642.9 sl-ft2  Iyz=      137 sl-ft2
TOTAL SAVED  (Label 155)


------ REGISTERS CLEARED

 EVA & CATS

                          %       lb    -------- in --------    ------ lb-in2 ------

HANDRAIL H23-MID FRAME,F  0      1.6   -88.3   -49.5   -57.2     139      77      63
 Delta POI (lb-in2)                                                  0       0     -69
PFR SOCKET S31-FRAME-AFT  0      1.9    55.9    18.0     4.5       3       2       3
PFR SOCKET S24-FRAME-AFT  0      1.9    27.9   -82.0    -1.5       3       2       3
PFR SOCKET S20-FRAME-FWD  0      1.9   -86.9    82.0    -2.5       3       2       3
PFR SOCKET S21-FRAME-FWD  0      1.9   -86.9   -81.0    -2.5       3       2       3
HANDRAIL H29-SILL         0      2.2   -31.8   -82.5     2.3       1     382     381
HANDRAIL H20-UPPER FRAME  0      2.2   -88.3    68.1   -27.3     203     175      29
 Delta POI (lb-in2)                                                  0       0      70
HANDRAIL H24-UPPER FRAME  0      2.2   -88.3   -68.0   -27.6     203     175      29
 Delta POI (lb-in2)                                                  0       0     -70
HANDRAIL H28-UPPER FRAME  0      2.3    29.4   -69.1   -25.1     373     321      53
 Delta POI (lb-in2)                                                  0       0    -129
HANDRAIL H25-UPPER FRAME  0      1.7    29.1    69.5   -25.9     189     167      24
 Delta POI (lb-in2)                                                  1       5      58
PFR SOCKET S22-FRAME      0      1.9    27.9    82.0    -2.5       3       2       3
PFR SOCKET S27-FRAME      0      1.9   -89.9   -30.5     1.5       3       2       3
PFR SOCKET S28-FRAME      0      1.9   -89.9      .0     7.5       3       2       3
PFR SOCKET S29-FRAME      0      1.9   -89.9    30.5     1.5       3       2       3
```

11-FORWARD FIXTURE	5	45.8	-75.0	-76.1	9.3	2370	3403	2076
Delta POI (lb-in2)						0	0	536
5-AFT FIXTURE	0	44.9	17.0	-80.2	11.9	2329	3983	1932
Delta POI (lb-in2)						0	-0	204
123-TRANSLATION AID-ASIP	0	13.6	59.6	19.5	-.6	1230	1328	129
Delta POI (lb-in2)						21	-355	-54
123-TRANSLATION AID-PORT	0	13.6	31.6	-80.5	-3.6	1230	1328	129
Delta POI (lb-in2)						21	-355	-54
3-ASIPE SAFETY BAR	0	16.1	-89.5	.0	-75.9	2455	28	2453
Delta POI (lb-in2)						-1	-2	1
ASIPE SAFETY BAR BRKTS	0	6.6	-87.0	.0	-76.0	3129	8	3128
15-FGS HANDHOLD-OUTBD	0	13.5	-74.5	-77.4	16.4	430	3179	2965
Delta POI (lb-in2)						0	0	185
14-FGS HANDHOLD-INBD	0	13.5	-71.0	-.5	41.5	2858	430	3286
31-CAST & MOUNTING HDW	18	12.0	29.0	-65.4	-44.9	7746	6363	1386
Delta POI (lb-in2)						0	0	-2966
32-CAST & MOUNTING HDW	18	12.0	29.0	-63.4	-44.9	7746	6363	1386
Delta POI (lb-in2)						0	0	-2966
PFR SOCKET S26-LIS,CENTE	0	1.1	-29.5	-50.9	6.5	1	2	2
PFR SOCKET S25-LIS,AFT	0	1.1	-5.0	-50.9	-13.5	1	2	2
79-MLI REPAIR TOOL & MTG	0	1.6	-60.0	-46.6	-56.3	9	338	337
Delta POI (lb-in2)						0	0	-4
100-SM MLI CONT BLKTS	0	4.4	7.9	-65.8	-22.6	334	675	478
Delta POI (lb-in2)						0	0	-117
SM MLI CONT BLKT POUCH	18	2.0	7.9	-65.8	-22.6	0	0	0
99-LG MLI CONT BLKTS	0	3.6	-58.4	68.0	-18.3	108	1076	1021
Delta POI (lb-in2)						0	0	30
LG MLI CONT BLKT POUCH	18	2.2	-58.4	68.0	-18.3	0	0	0
9-WIDE FIELD HANDHOLD	18	45.0	-83.5	-73.1	6.4	25077	28496	3885
ASLR MOUNTING PLATE	0	43.6	-86.3	55.2	-66.8	4088	2215	1874
Delta POI (lb-in2)						0	0	1214
51,52,53-ASLR KITS	0	17.9	-87.5	55.2	-66.9	1157	630	539
Delta POI (lb-in2)						0	0	435
MLI RECOVERY BAG POUCH	0	3.0	-24.0	.3	11.0	220	257	435
96-MLI REC BAG, BAY 5	0	1.6	-20.5	-4.5	9.1	13	13	27
97-MLI REC BAG, BAY 7+8	0	1.8	-30.5	5.5	9.1	15	15	30
HANDRAIL CADDY POUCH-5	0	1.0	-3.0	.3	9.5	60	16	72
HANDRAIL CADDY POUCH-5	0	1.0	10.0	.3	9.5	60	16	72
HANDRAIL CADDY POUCH-7	0	1.0	23.0	.3	9.5	60	16	72
82-V2 HANDRAIL COVER CAD	0	2.7	-3.0	.3	9.5	115	22	136
82-V2 HANDRAIL COVER CAD	0	2.7	10.0	.3	9.5	117	22	137
83-RSU HANDRAIL COVER CA	0	2.8	23.0	.3	9.5	119	22	140
122-PFR EXTENDER,ASIPE	0	3.6	60.8	.0	-21.5	40	43	9
PFR SOCKET (ASIPE PFR)	0	2.0	57.0	.0	-18.0	4	4	5
120-MTL (IN SOPE)	0	3.4	-34.0	54.6	21.8	7	8	8
132-GAP SPANNER	18	1.7	45.5	.0	-60.0	896	1	896
134-STS PFR	18	11.1	28.5	82.0	-2.5	0	0	0
134-STS PFR,FSIPE	18	11.1	-91.0	.0	7.5	0	0	0
134-STS PFR,ASIPE	18	11.1	57.5	.0	-17.9	0	0	0
135-PUSH BUT ART SOCKET	18	4.1	32.2	83.5	-4.0	5	13	13
135-PUSH BUT ART SOCKET,	18	4.1	-93.7	1.5	9.0	5	13	13
135-PUSH BUT ART SOCKET,	18	4.1	64.7	1.5	-25.5	5	13	13
80-JETTISON HANDLE	18	4.7	-36.0	-24.0	-14.0	0	0	0
71-SPARE PIP PINS	18	2.4	-36.0	-24.0	-14.0	0	0	0

EVACATS

		X=	-36.1 in	Ix=	419.5 sl-ft2	Ixy=	-20 sl-ft2
Wt.=	448.0 lb	Y=	-23.3 in	Iy=	413.2 sl-ft2	Ixz=	26 sl-ft2
Inc	25.7 cont	Z=	-13.6 in	Iz=	607.9 sl-ft2	Iyz=	-85 sl-ft2

TOTAL SAVED (Label 160)

------ REGISTERS CLEARED

ORUS INCLUDING COS & FGS

37-ECU	18	17.5	10.5	55.6	18.3	365	236	365
34,38-RSU-R+CONN CAPS	0	24.4	7.5	71.1	18.3	254	344	496
34,38-RSU-R+CONN CAPS	0	24.4	-11.0	56.3	18.3	254	344	496
34,38-RSU-R+CONN CAPS	0	24.4	-32.5	66.8	18.3	344	254	496
41-DSC	18	14.0	-12.3	67.5	19.8	351	687	761
43-DSC HMD	18	2.1	-12.3	67.5	19.8	57	109	120
54-56,58,59-NOBL,PLUGS&C	0	31.9	-34.4	-63.6	-16.9	6152	14773	10532
Delta POI (lb-in2)						0	0	-2196
20-ASCS CRYO VENT INSERT	0	3.4	32.0	49.4	-56.7	28	32	32
21-ASCS CRYO VENT INSERT	0	3.4	32.0	56.8	-63.4	28	32	32
4-COSTAR Y HARNESS	0	9.2	33.5	-53.1	-60.9	166	90	90
33-COS THERMAL JOINT COV	18	5.0	33.5	-60.8	-60.5	21	21	21
30-TRANSPORT BAG, ASCS S	0	2.2	35.0	-53.6	-57.3	13	17	19
Delta POI (lb-in2)						0	0	6
28,29-AS DSES (4) + CADD	18	5.0	39.0	-58.1	-62.7	58	54	58
Delta POI (lb-in2)						0	0	22
66,67-RIB CLAMPS (6) & C	0	18.8	36.0	-55.1	-65.4	55	144	148
Delta POI (lb-in2)						0	0	21
1-COS	0	882.5	-4.5	.0	-17.5	180177	646726	646726
78-COS AXIAL HANDHOLD	18	19.0	-2.8	-7.3	3.1	2642	25278	27725
Delta POI (lb-in2)						4319	-293	-65
13-FGS-3R	0	462.3	-71.0	-.5	-5.9	183763	135185	92957

ORUS

	X=	-23.8 in	Ix=	300.6 sl-ft2	Ixy=	6 sl-ft2
Wt.= 1562.8 lb	Y=	1.8 in	Iy=	584.7 sl-ft2	Ixz=	-67 sl-ft2
Inc 13.3 cont	Z=	-12.6 in	Iz=	674.1 sl-ft2	Iyz=	71 sl-ft2

TOTAL SAVED (Label 170)

------ REGISTERS CLEARED

TOTAL ENTIRE ORUC HARDWARE

	%	lb	-------- in --------			------ sl-ft2 ------		
{100}PALLET	0	1452.6	-29.4	.0	-57.6	1127	506	1288
Delta POI (sl-ft2)						0	-0	0
{110}AVIONICS	0	46.2	27.5	4.2	-82.3	4	1	4
Delta POI (sl-ft2)						0	-0	0
{140}LIS	0	1380.5	-29.5	.0	-37.2	623	275	586
Delta POI (sl-ft2)						-0	0	-0
{145}SHELF	0	259.4	-32.1	65.9	3.8	16	65	61
Delta POI (sl-ft2)						-0	-1	3
{150}ASIPE	0	960.9	-1.9	-.5	-15.7	185	284	401
Delta POI (sl-ft2)						-4	-6	2
{151}FSIPE	0	602.7	-75.5	.0	.1	47	37	25
Delta POI (sl-ft2)						0	1	0
{155}OPES	0	648.5	-2.4	10.3	-13.0	681	316	643
Delta POI (sl-ft2)						56	-81	137
{160}EVACATS	0	448.0	-36.1	-23.3	-13.6	419	413	608
Delta POI (sl-ft2)						-20	26	-85

```
{170}ORUS                 0   1562.8   -23.8     1.8   -12.6     301     585     674
 Delta POI (sl-ft2)                                                  6     -67      71


ORUC
                   X=   -26.2 in  Ix=    4348.9 sl-ft2  Ixy=       73 sl-ft2
Wt.=  7361.6 lb    Y=     2.1 in  Iy=    3688.8 sl-ft2  Ixz=     -199 sl-ft2
Inc     78.2 cont  Z=   -25.4 in  Iz=    5161.7 sl-ft2  Iyz=      231 sl-ft2
TOTAL SAVED  (Label 260)

        DIRECTION COSINES                   CORRESPONDING ANGLES
   .9720592  -.0283905  -.2330149         13.576     91.627    103.475
   .0630415   .9877656   .1426384         86.386      8.972     81.799
   .2261144  -.1533426   .9619560         76.932     98.821     15.855

PRINCIPAL MOIs = 4303.329 3650.776 5245.264  (sl-ft2)


------ REGISTERS CLEARED

 TRANSLATE THE ORUC INTO ORBITER FRAME

{260}ORUC                 0   7361.6   -26.2     2.1   -25.4    4349    3689    5162
 Delta POI (sl-ft2)                                                 73    -199     231
Mass Properties Translated by  998.2  0  414

ORUC (ORBITER COORD)
                   X=   972.0 in  Ix=    4348.9 sl-ft2  Ixy=       73 sl-ft2
Wt.=  7361.6 lb    Y=     2.1 in  Iy=    3688.8 sl-ft2  Ixz=     -199 sl-ft2
Inc     78.2 cont  Z=   388.6 in  Iz=    5161.8 sl-ft2  Iyz=      231 sl-ft2
TOTAL SAVED  (Label 440)

------ REGISTERS CLEARED
*************************************************************************
 CONVERT TOTAL ORUC MASS PROPS FROM SLUG-FT2 TO LB-IN2 FOR SEQ OF EVENTS **
*************************************************************************
{260}ORUC                 0   7361.6   -26.2     2.1   -25.4    4349    3689    5162
 Delta POI (sl-ft2)                                                 73    -199     231

ORUC TOTAL LB-IN2
                   X=   -26.2 in  Ix=20148650.0 lb-in2  Ixy=   339576 lb-in2
Wt.=  7361.6 lb    Y=     2.1 in  Iy=17090380.0 lb-in2  Ixz=  -922043 lb-in2
Inc     78.2 cont  Z=   -25.4 in  Iz=23914330.0 lb-in2  Iyz=  1069697 lb-in2
TOTAL SAVED  (Label ORUCLBIN2)

------ REGISTERS CLEARED
```

Appendix C. SLIC Mass Properties

HST SM4 - SLIC MASS PROPS (NOVEMBER 21, 2003)

ITEM	%	WT lb	X cg	Y cg	Z cg	Ix	Iy	Iz
			-------- in --------			------ lb-in2 ------		
SLIC MASS PROPERTIES								
PALLET								
PALLET HORIZ	5	1248.5	-31.1	.0	-20.5	5681770	1278330	6625520
Delta POI (lb-in2)						6	-2778	5
PALLET VERT	5	411.0	-1.5	-.5	-62.7	941356	190633	804893
Delta POI (lb-in2)						-256	-9652	-1051
HORIZ PALLET EXTENS	5	67.8	20.3	.0	-26.8	45929	3681	46382
HORIZ EXTENS MLI	18	5.0	20.3	.0	-26.8	3400	276	3433
BATT MOUNT 1	18	12.8	21.5	-36.5	-20.2	69	87	153
BATT MOUNT 1	18	12.8	21.5	-4.1	-20.2	69	87	153
BATT MOUNT 1	18	12.8	21.5	4.1	-20.2	69	87	153
BATT MOUNT 1	18	12.8	21.5	36.5	-20.2	69	87	153
BATT MOUNT 2	18	16.0	.5	-36.5	-20.0	88	110	192
BATT MOUNT 2	18	16.0	.5	36.5	-20.0	88	110	192
BATT MOUNT 3	18	12.8	.5	4.1	-20.2	69	87	153
BATT MOUNT 3	18	12.8	.5	-4.1	-20.2	69	87	153

PALLET

	X=	-19.8 in	Ix=	1660 sl-ft2	Ixy=	-1 sl-ft2
Wt.= 1947.9 lb	Y=	-.1 in	Iy=	584 sl-ft2	Ixz=	-79 sl-ft2
Inc 106.8 cont	Z=	-30.1 in	Iz=	1838 sl-ft2	Iyz=	1 sl-ft2

TOTAL SAVED (Label 1000)

------ REGISTERS CLEARED

WSIPE

WSIPE BOX	5	634.4	-30.7	.3	9.3	1121440	791280	557866
Delta POI (lb-in2)						0	-23861	0
WSIPE MLI	18	20.0	-47.5	-45.0	-50.0	0	0	0

WSIPE

	X=	-31.3 in	Ix=	282 sl-ft2	Ixy=	4 sl-ft2
Wt.= 689.7 lb	Y=	-1.3 in	Iy=	198 sl-ft2	Ixz=	-1 sl-ft2
Inc 35.3 cont	Z=	7.3 in	Iz=	138 sl-ft2	Iyz=	13 sl-ft2

TOTAL SAVED (Label 1010)

------ REGISTERS CLEARED

ISOLATORS

STARBOARD AFT (LONG)	0	62.8	-2.4	50.7	8.4	8499	8048	2910
Delta POI (lb-in2)						1281	-2677	-3190
PORT AFT (LONG)	0	62.8	-2.4	-50.7	8.4	8499	8048	2910
Delta POI (lb-in2)						-1281	-2677	3190

STARBOARD FORWARD (LONG)	0	62.8	-60.5	50.7	8.4	8499	8048	2910
Delta POI (lb-in2)						-1281	2677	-3190
PORT FORWARD (LONG)	0	62.8	-60.5	-50.7	8.4	8499	8048	2910
Delta POI (lb-in2)						1281	2677	3190
STARBOARD MID-AFT (SHORT	0	60.7	-11.8	52.1	-9.1	2802	5586	5875
Delta POI (lb-in2)						2412	-2148	-1240
PORT MID-AFT (SHORT)	0	60.7	-11.8	-52.1	-9.1	2802	5586	5875
Delta POI (lb-in2)						-2412	-2148	1240
STARBOARD MID-FORWARD (S	0	60.7	-51.1	52.1	-9.1	2802	5586	5875
Delta POI (lb-in2)						-2412	2148	-1240
PORT MID-FORWARD (SHORT)	0	60.7	-51.1	-52.1	-9.1	2802	5586	5875
Delta POI (lb-in2)						2412	2148	1240
WSIPE ISOLATOR FTG	5	6.8	8.5	64.6	-17.9	56	58	62
Delta POI (lb-in2)						7	0	0
WSIPE ISOLATOR FTG	5	6.8	8.5	-64.6	-17.9	56	58	62
Delta POI (lb-in2)						-7	0	0
WSIPE ISOLATOR FTG	5	6.8	-71.4	64.6	-17.9	56	58	62
Delta POI (lb-in2)						-7	0	0
WSIPE ISOLATOR FTG	5	6.8	-71.4	-64.6	-17.9	56	58	62
Delta POI (lb-in2)						7	0	0

ISOLATORS

		X=	-31.4 in	Ix=	328 sl-ft2	Ixy=	0 sl-ft2
Wt.=	523.5 lb	Y=	.0 in	Iy=	98 sl-ft2	Ixz=	-0 sl-ft2
Inc	2.3 cont	Z=	-1.2 in	Iz=	392 sl-ft2	Iyz=	0 sl-ft2

TOTAL SAVED (Label 1020)

------ REGISTERS CLEARED

COPE ASSY

COPE	18	229.0	13.1	.0	-66.6	94149	31092	89673
Delta POI (lb-in2)						16	30	32

COPE ASSY

		X=	13.1 in	Ix=	24 sl-ft2	Ixy=	0 sl-ft2
Wt.=	270.2 lb	Y=	.0 in	Iy=	8 sl-ft2	Ixz=	0 sl-ft2
Inc	41.2 cont	Z=	-66.6 in	Iz=	23 sl-ft2	Iyz=	0 sl-ft2

TOTAL SAVED (Label 1030)

------ REGISTERS CLEARED

EVA

10-WIDE FIELD HANDHOLD	18	45.0	-8.8	2.4	-63.0	28496	3885	25077
WIDE FIELD HANDHOLD STOW	18	20.0	-2.8	2.4	-47.5	0	0	0
EVA PLACEHOLDER	18	150.0	-8.8	2.4	-63.0	0	0	0

EVA

		X=	-8.2 in	Ix=	8 sl-ft2	Ixy=	0 sl-ft2
Wt.=	253.7 lb	Y=	2.4 in	Iy=	2 sl-ft2	Ixz=	0 sl-ft2
Inc	38.7 cont	Z=	-61.6 in	Iz=	7 sl-ft2	Iyz=	0 sl-ft2

TOTAL SAVED (Label 1040)

------ REGISTERS CLEARED

AVIONICS

HARNESS	18	50.0	-32.0	63.0	-14.0	0	0	0
EPDSU	18	85.0	-30.4	62.5	-14.0	3657	5427	6590
MOUNTING PLATE	18	15.0	-34.2	65.5	-19.7	603	1075	1669

AVIONICS

	X=	-31.3 in	Ix=	1 sl-ft2	Ixy=	-0 sl-ft2	
Wt.= 177.0 lb	Y=	63.0 in	Iy=	2 sl-ft2	Ixz=	0 sl-ft2	
Inc 27.0 cont	Z=	-14.6 in	Iz=	2 sl-ft2	Iyz=	-0 sl-ft2	

TOTAL SAVED (Label 2030)

------ REGISTERS CLEARED

ORUS

7-WFC3 W/GUIDE STUDS	6	909.7	-32.9	.6	19.4	174414	154072	72243
Delta POI (lb-in2)						-260	30384	-6
45-BATTERY, PORT	0	459.0	11.0	-22.9	-9.5	77191	64103	120955
45-BATTERY, STARBOARD	0	459.0	11.0	22.9	-9.5	77191	64103	120955
BATTERY MTG PLATE, PORT	5	62.0	12.6	-23.7	-16.1	10539	9964	20400
BATTERY MTG PLATE, STARB	5	64.0	12.6	22.2	-16.1	12371	10288	22553
BATTERY SOFT ENCLOSURE	18	10.0	11.0	-22.9	-9.1	1759	1485	2725
BATTERY SOFT ENCLOSURE	18	10.0	11.0	22.9	-9.1	1759	1485	2725
18-ASCS RADIATOR	5	407.5	-83.1	1.0	-33.9	549198	33213	520880
Delta POI (lb-in2)						-5117	197	-106
RADIATOR MTG HARDWARE	18	64.9	-76.0	-11.7	-27.9	166179	5230	162578
Delta POI (lb-in2)						-656	453	-12173
36,39-RSU+CONN CAPS (SPA	0	24.4	10.3	-3.0	-70.6	496	254	344
98-MLI REPAIR KIT	0	1.5	21.1	-17.0	-67.6	35	18	18
17-OCE-EK HARNESS	0	4.1	21.0	18.0	-63.2	50	1	49
42-DSC (SPARE)	18	14.0	11.8	-2.8	-60.8	761	351	687
44-DSC HMD (SPARE)	18	2.1	11.8	-2.8	-60.8	120	57	109
49-BATTERY CAP ASSY (IN	18	1.0	21.0	21.7	-73.6	0	0	0
50-VIK	0	1.9	8.0	-19.0	-72.6	9	1	9
68-FUSE MODULE, OTA P27A	0	.8	8.0	17.0	-73.6	3	1	3
69-FUSE MODULE, OTA P25,	0	.4	8.0	17.0	-69.6	1	0	1
70-FUSE PLUGS, P15,P16,P	0	2.6	7.8	18.5	-62.3	17	5	12
OCE-EK POUCH	18	2.0	21.0	18.0	-63.2	34	5	34
MLI-RK POUCH	0	.6	21.1	-17.0	-67.6	17	9	9
119-SRTM,RAGB,ADAPTER	0	9.0	8.9	-20.3	-61.0	87	41	96
Delta POI (lb-in2)						-11	0	0
65-SSRF (1-7)	0	46.9	16.7	4.1	-37.1	13001	2303	14450
Delta POI (lb-in2)						-932	-179	239
SSRF STOWAGE POUCH	18	33.0	16.5	9.4	-38.0	14966	3363	16616
23-ASCS RADIATOR SOCK (L	18	10.0	-85.9	.0	-34.8	551	60	551
23-ASCS RADIATOR SOCK (S	18	10.0	-89.9	32.8	-34.3	21	141	141
24-ASCS SOCK RESTRAINT S	18	.5	-88.7	.0	-35.0	0	1	1
22-CPL EVAP PROTECTIVE C	18	2.0	-84.0	.0	-32.1	35	1	34
27-AS BAY 4 CRYOVENT CVR	18	5.0	-84.0	.0	-32.0	0	0	0

ORUS

X=	-22.6 in	Ix=	679 sl-ft2	Ixy=	-0 sl-ft2	

```
Wt.=  2729.9 lb    Y=      .3 in  Iy=      1122 sl-ft2  Ixz=       53 sl-ft2
Inc    112.0 cont  Z=    -6.5 in  Iz=      1125 sl-ft2  Iyz=       -2 sl-ft2
TOTAL SAVED  (Label 1051)



------ REGISTERS CLEARED

 TOTAL SLIC AT LIFTOFF

                         %       lb    -------- in --------    ------ sl-ft2 ------

{1000}PALLET             0   1947.9   -19.8     -.1   -30.1    1660     584    1838
 Delta POI (sl-ft2)                                              -1     -79       1
{1010}WSIPE              0    689.7   -31.3    -1.3     7.3     282     198     138
 Delta POI (sl-ft2)                                               4      -1      13
{1020}ISOLATORS          0    523.5   -31.4      .0    -1.2     328      98     392
 Delta POI (sl-ft2)                                               0      -0       0
{1030}COPE ASSY          0    270.2    13.1      .0   -66.6      24       8      23
 Delta POI (sl-ft2)                                               0       0       0
{1040}EVA                0    253.7    -8.2     2.4   -61.6       8       2       7
 Delta POI (sl-ft2)                                               0       0       0
{2030}AVIONICS           0    177.0   -31.3    63.0   -14.6       1       2       2
 Delta POI (sl-ft2)                                              -0       0      -0
{1051}ORUS               0   2729.9   -22.6      .3    -6.5     679    1122    1125
 Delta POI (sl-ft2)                                              -0      53      -2


SLIC AT LIFTOFF
                   X=   -21.6 in  Ix=      3634 sl-ft2  Ixy=      -18 sl-ft2
Wt.=  6592.0 lb    Y=     1.7 in  Iy=      2629 sl-ft2  Ixz=     -228 sl-ft2
Inc    363.4 cont  Z=   -16.4 in  Iz=      3782 sl-ft2  Iyz=        9 sl-ft2
TOTAL SAVED  (Label 1070)


------ REGISTERS CLEARED
        DIRECTION COSINES                    CORRESPONDING ANGLES
   .8087015   .0232329  -.5877612         36.031     88.669    125.998
  -.0202345   .9997276   .0116764         91.159      1.337     89.331
   .5878721   .0024503   .8089508         53.994     89.860     36.006

PRINCIPAL MOIs = 3469.028 2628.608 3947.275  (sl-ft2)


 TRANSLATE THE SLIC TO ORBITER COORDINATES

{1070}SLIC AT LIFTOFF    0   6592.0   -21.6     1.7   -16.4    3634    2629    3782
 Delta POI (sl-ft2)                                              -18    -228       9
Mass Properties Translated by  833  0  414

SLIC O.2% (ORBITER)
                   X=   811.4 in  Ix=      3634 sl-ft2  Ixy=      -18 sl-ft2
Wt.=  6592.0 lb    Y=     1.7 in  Iy=      2629 sl-ft2  Ixz=     -228 sl-ft2
Inc    363.4 cont  Z=   397.6 in  Iz=      3782 sl-ft2  Iyz=        9 sl-ft2
TOTAL SAVED  (Label 2060)

------ REGISTERS CLEARED
*************************************************************************
 CONVERT TOTAL SLIC MASS PROPS FROM SLUG-FT2 TO LB-IN2 FOR SEQ OF EVENTS **
*************************************************************************
```

```
{1070}SLIC AT LIFTOFF     0   6592.0   -21.6     1.7   -16.4    3634    2629    3782
 Delta POI (sl-ft2)                                               -18    -228       9

SLIC TOTAL LB-IN2
                   X=   -21.6 in  Ix=  16836330 lb-in2  Ixy=   -81957 lb-in2
Wt.=  6592.0 lb    Y=     1.7 in  Iy=  12180610 lb-in2  Ixz= -1054637 lb-in2
Inc    363.4 cont  Z=   -16.4 in  Iz=  17521640 lb-in2  Iyz=    41060 lb-in2
TOTAL SAVED  (Label SLICLBIN2)

------ REGISTERS CLEARED
```

Appendix D. Middeck Mass Properties

HST SM4 - MIDDECK MASS PROPS (NOVEMBER 17, 2003)

ITEM	%	WT lb	X cg	Y cg	Z cg	Ix	Iy	Iz
			-------- in --------			------ lb-in2 ------		
MIDDECK MASS PROPERTIES								
MIDDECK - LAUNCH AND RETURN								
16-FGS GUIDE STUD TRAY	5	2.1	520.0	.0	300.0	0	0	0
47-BATTERY CAP CADDY	18	6.0	520.0	.0	300.0	0	0	0
73-HPGSCA-01	0	.0	520.0	.0	300.0	0	0	0
74-HPGSCA-02	0	.0	520.0	.0	300.0	0	0	0
75-HPGSCA DATA CABLE ASS	0	.0	520.0	.0	300.0	0	0	0
76-HPGSCA DATA CABLE ASS	0	.0	520.0	.0	300.0	0	0	0
77-SOCKET, 7/16", 4" SPR	0	.5	520.0	.0	300.0	0	0	0
84-FGS HANDRAIL CADDY W/	5	2.8	520.0	.0	300.0	0	0	0
85-MISC HANDRAIL CADDY W	5	2.8	520.0	.0	300.0	0	0	0
86-CONN TOOL, HIGH TORQ,	18	1.2	520.0	.0	300.0	0	0	0
87-CONN TOOL, HIGH TORQ,	18	1.2	520.0	.0	300.0	0	0	0
90-CONN TOOL, OFFSET	0	2.2	520.0	.0	300.0	0	0	0
92-LUBRICATOR APPLICANT	0	2.3	520.0	.0	300.0	0	0	0
93-LUBRICATOR APPLICANT	0	2.3	520.0	.0	300.0	0	0	0
94-MIDDECK CONT KIT	0	4.9	520.0	.0	300.0	0	0	0
95-MIDDECK CONT KIT BLKT	5	1.7	520.0	.0	300.0	0	0	0
101-MTL	0	3.3	520.0	.0	300.0	0	0	0
101-MTL	0	3.3	520.0	.0	300.0	0	0	0
102-PGT RS422 HARNESS	5	.5	520.0	.0	300.0	0	0	0
103-PGT-PRIM SN 1001	5	10.7	520.0	.0	300.0	0	0	0
104-PGT-PRIM SN 1002	5	10.7	520.0	.0	300.0	0	0	0
104-PRT CONTROLLER-PRIM	5	11.4	520.0	.0	300.0	0	0	0
105-PRT UMBILICAL (6 FT)	5	1.6	520.0	.0	300.0	0	0	0
106-PRT WRENCH-PRIM	5	7.8	520.0	.0	300.0	0	0	0
107-PRT BATTERY (LI-ION)	5	2.5	520.0	.0	300.0	0	0	0
107-PRT BATTERY (LI-ION)	5	2.5	520.0	.0	300.0	0	0	0
107-PRT BATTERY (LI-ION)	5	2.5	520.0	.0	300.0	0	0	0
107-PRT BATTERY (LI-ION)	5	2.5	520.0	.0	300.0	0	0	0
108-PGT-CONT SN 1003	5	10.7	520.0	.0	300.0	0	0	0
109-PRT CONTROLLER-CONT	5	11.4	520.0	.0	300.0	0	0	0
110-PRT UMBILICAL (6 FT)	5	1.6	520.0	.0	300.0	0	0	0
111-PRT WRENCH-CONT	5	7.8	520.0	.0	300.0	0	0	0
112-SOCKET,7/16" ADJ EXT	0	2.2	520.0	.0	300.0	0	0	0
114-SOCKET,7/16" ADJ EXT	0	1.6	520.0	.0	300.0	0	0	0
114-SOCKET,7/16" ADJ EXT	0	1.6	520.0	.0	300.0	0	0	0
115-SOCKET,7/16" ADJ A-L	0	.0	520.0	.0	300.0	0	0	0
116-SOCKET,7/16" ADJ A-L	0	.0	520.0	.0	300.0	0	0	0
117-SOCKET,7/16" RIGID 6	0	.6	520.0	.0	300.0	0	0	0
126-MODULAR TOOLBOARD, D	0	4.6	520.0	.0	300.0	0	0	0
126-MODULAR TOOLBOARD, T	0	4.3	520.0	.0	300.0	0	0	0
128-O'TETHER	0	.1	520.0	.0	300.0	0	0	0
128-O'TETHER	0	.1	520.0	.0	300.0	0	0	0
129-ZIPNUT REMOVAL TOOL	18	5.0	520.0	.0	300.0	0	0	0
131-WIRE TIES/CADDY	18	2.0	520.0	.0	300.0	0	0	0
133-SINGLE TETHER CADDY	0	.5	520.0	.0	300.0	0	0	0
137-MINUS V3 DOOR TETHER	18	2.0	520.0	.0	300.0	0	0	0

```
MIDDECK
                   X=   520.0 in  Ix=        -0 sl-ft2  Ixy=        0 sl-ft2
Wt.=   153.2 lb    Y=      .0 in  Iy=        -0 sl-ft2  Ixz=       -0 sl-ft2
Inc      7.9 cont  Z=   300.0 in  Iz=        -0 sl-ft2  Iyz=        0 sl-ft2
TOTAL SAVED  (Label 2000)


------ REGISTERS CLEARED

 LAUNCH MIDDECK - RETURN ORUC

16-FGS GUIDE STUDS LOCKI  5       .3   520.0      .0   300.0       0       0       0
16-FGS GUIDE STUDS LOCKI  5       .3   520.0      .0   300.0       0       0       0
16-FGS GUIDE STUDS LOCKI  5       .3   520.0      .0   300.0       0       0       0
16-FGS GUIDE STUDS LOCKI  5       .3   520.0      .0   300.0       0       0       0
16-FGS GUIDE STUDS NON-L  0       .3   520.0      .0   300.0       0       0       0
16-FGS GUIDE STUDS NON-L  0       .3   520.0      .0   300.0       0       0       0
16-FGS GUIDE STUDS NON-L  0       .3   520.0      .0   300.0       0       0       0
16-FGS GUIDE STUDS NON-L  0       .3   520.0      .0   300.0       0       0       0


MIDDECKORUC
                   X=   520.0 in  Ix=         0 sl-ft2  Ixy=        0 sl-ft2
Wt.=     2.2 lb    Y=      .0 in  Iy=         0 sl-ft2  Ixz=        0 sl-ft2
Inc       .1 cont  Z=   300.0 in  Iz=         0 sl-ft2  Iyz=        0 sl-ft2
TOTAL SAVED  (Label 2010)


------ REGISTERS CLEARED

 LAUNCH MIDDECK - RETURN SLIC

48-BATTERY CAP CADDY ASS 18     20.0   520.0      .0   300.0       0       0       0


MIDDECKSLIC
                   X=   520.0 in  Ix=         0 sl-ft2  Ixy=        0 sl-ft2
Wt.=    23.6 lb    Y=      .0 in  Iy=         0 sl-ft2  Ixz=        0 sl-ft2
Inc      3.6 cont  Z=   300.0 in  Iz=         0 sl-ft2  Iyz=        0 sl-ft2
TOTAL SAVED  (Label 2020)


------ REGISTERS CLEARED

 LAUNCH ORUC - RETURN MIDDECK

38-RSU CONN CAP ASSY     18       .5   520.0      .0   300.0       0       0       0
38-RSU CONN CAP ASSY     18       .5   520.0      .0   300.0       0       0       0
38-RSU CONN CAP ASSY     18       .5   520.0      .0   300.0       0       0       0
43-DSC HMD               18      2.1   520.0      .0   300.0       0       0       0
58-NOBL VENT PLUGS CADDY  0       .2   520.0      .0   300.0       0       0       0
58-NOBL VENT PLUGS CADDY  0       .2   520.0      .0   300.0       0       0       0
58-NOBL VENT PLUGS CADDY  0       .2   520.0      .0   300.0       0       0       0
96-MLI RECOVERY BAG, BAY  0      1.6   520.0      .0   300.0       0       0       0
97-MLI RECOVERY BAG, BAY  0      1.8   520.0      .0   300.0       0       0       0


ORUCMIDDECK
```

```
                    X=   520.0 in  Ix=         0 sl-ft2  Ixy=        0 sl-ft2
Wt.=     8.1 lb     Y=      .0 in  Iy=         0 sl-ft2  Ixz=        0 sl-ft2
Inc       .7 cont   Z=   300.0 in  Iz=         0 sl-ft2  Iyz=        0 sl-ft2
TOTAL SAVED  (Label 2030)


------ REGISTERS CLEARED

 LAUNCH SLIC - RETURN MIDDECK

22-CPL EVAPORATOR BRKT,  18      2.0   520.0      .0   300.0       0       0       0
24-ASCS SOCK RESTRAINT S 18       .5   520.0      .0   300.0       0       0       0


SLICMIDDECK
                    X=   520.0 in  Ix=         0 sl-ft2  Ixy=        0 sl-ft2
Wt.=     2.9 lb     Y=      .0 in  Iy=         0 sl-ft2  Ixz=        0 sl-ft2
Inc       .5 cont   Z=   300.0 in  Iz=         0 sl-ft2  Iyz=        0 sl-ft2
TOTAL SAVED  (Label 2040)


------ REGISTERS CLEARED

 LAUNCH HST - RETURN MIDDECK

25-ESM CONN CAP ASSY     18      3.0   520.0      .0   300.0       0       0       0
26-AS BAY 4 CRYO VENT CO 18      5.0   520.0      .0   300.0       0       0       0
57-NOBL VENT PLUGS-BAY 5  0       .7   520.0      .0   300.0       0       0       0
60-MLI BAY 5              0       .0   520.0      .0   300.0       0       0       0
61-WIRE ASSEMBLIES, BAY   0       .0   520.0      .0   300.0       0       0       0
62-MLI, BAY 8             0       .0   520.0      .0   300.0       0       0       0
63-MLI PATCHES, BAY 8     0       .0   520.0      .0   300.0       0       0       0
64-WIRE, BAY 9            0       .0   520.0      .0   300.0       0       0       0


HSTMIDDECK
                    X=   520.0 in  Ix=         0 sl-ft2  Ixy=        0 sl-ft2
Wt.=    10.1 lb     Y=      .0 in  Iy=        -0 sl-ft2  Ixz=        0 sl-ft2
Inc      1.4 cont   Z=   300.0 in  Iz=        -0 sl-ft2  Iyz=        0 sl-ft2
TOTAL SAVED  (Label 2050)


------ REGISTERS CLEARED


 TSA - LAUNCH AND RETURN

88-CONN TOOL, HIGH TORQ   0      1.2   520.0      .0   300.0       0       0       0
89-CONN TOOL, LARGE       0      1.8   520.0      .0   300.0       0       0       0
91-CONN TOOL, SMALL       0      1.7   520.0      .0   300.0       0       0       0
113-SOCKET, 7/16", ADJ E  0      2.2   520.0      .0   300.0       0       0       0
118-SOCKET, 7/16", RIGID  0       .6   520.0      .0   300.0       0       0       0
127-FASTENER RETENTION T  0       .6   520.0      .0   300.0       0       0       0
127-FASTENER RETENTION T  0       .6   520.0      .0   300.0       0       0       0
130-ZIPNUT REMOVAL TOOL  18      5.0   520.0      .0   300.0       0       0       0


TSA
                    X=   520.0 in  Ix=        -0 sl-ft2  Ixy=        0 sl-ft2
Wt.=    14.7 lb     Y=      .0 in  Iy=        -0 sl-ft2  Ixz=       -0 sl-ft2
```

```
Inc       .9 cont  Z=   300.0 in  Iz=         0 sl-ft2  Iyz=        0 sl-ft2
TOTAL SAVED  (Label 2060)


------ REGISTERS CLEARED

 MIDDECK AND TSA LAUNCH

                         %       lb    -------- in --------    ------ sl-ft2 ------

{2000}MIDDECK            0    153.2   520.0      .0   300.0      -0      -0      -0
 Delta POI (sl-ft2)                                                 0      -0       0
{2010}MIDDECKORUC        0      2.2   520.0      .0   300.0       0       0       0
 Delta POI (sl-ft2)                                                 0       0       0
{2020}MIDDECKSLIC        0     23.6   520.0      .0   300.0       0       0       0
{2060}TSA                0     14.7   520.0      .0   300.0      -0      -0       0
 Delta POI (sl-ft2)                                                 0      -0       0

TOTAL
                  X=   520.0 in  Ix=        -0 sl-ft2  Ixy=        0 sl-ft2
Wt.=   193.7 lb   Y=      .0 in  Iy=        -0 sl-ft2  Ixz=       -0 sl-ft2
Inc     12.4 cont  Z=   300.0 in  Iz=        -0 sl-ft2  Iyz=        0 sl-ft2
TOTAL SAVED  (Label 3000)


------ REGISTERS CLEARED
        DIRECTION COSINES                    CORRESPONDING ANGLES
   .7630202   .0000000  -.6463751         40.269     90.000    130.269
   .0000000  1.0000000   .0000000         90.000       .000     90.000
   .6463751   .0000000   .7630202         49.731     90.000     40.269

PRINCIPAL MOIs =-2.392108E-03-1.726722E-03 2.337038E-04  (sl-ft2)



 MIDDECK AND TSA RETURN

{2000}MIDDECK            0    153.2   520.0      .0   300.0      -0      -0      -0
 Delta POI (sl-ft2)                                                 0      -0       0
{2030}ORUCMIDDECK        0      8.1   520.0      .0   300.0       0       0       0
{2040}SLICMIDDECK        0      3.0   520.0      .0   300.0       0       0       0
{2050}HSTMIDDECK         0     10.1   520.0      .0   300.0       0      -0      -0
 Delta POI (sl-ft2)                                                 0       0       0
{2060}TSA                0     14.7   520.0      .0   300.0      -0      -0       0
 Delta POI (sl-ft2)                                                 0      -0       0

TOTAL
                  X=   520.0 in  Ix=         0 sl-ft2  Ixy=        0 sl-ft2
Wt.=   189.0 lb   Y=      .0 in  Iy=        -0 sl-ft2  Ixz=       -0 sl-ft2
Inc     11.3 cont  Z=   300.0 in  Iz=        -0 sl-ft2  Iyz=        0 sl-ft2
TOTAL SAVED  (Label 3500)


------ REGISTERS CLEARED
        DIRECTION COSINES                    CORRESPONDING ANGLES
   .9819566   .0000000   .1891076         10.901     90.000     79.099
   .0000000  1.0000000   .0000000         90.000       .000     90.000
  -.1891076   .0000000   .9819566        100.901     90.000     10.901

PRINCIPAL MOIs = 5.148147E-04-1.726722E-03-1.809857E-03  (sl-ft2)
```

```
------ REGISTERS CLEARED
*****************************************************************************
 CONVERT TOTAL MIDDECK MASS PROPS FROM SLUG-FT2 TO LB-IN2 FOR SEQ OF EVENTS **
*****************************************************************************
{3000}TOTAL               0    193.7   520.0      .0   300.0      -0      -0      -0
 Delta POI (sl-ft2)                                                 0      -0       0

MIDDECK TOTAL LB-IN2
                   X=   520.0 in  Ix=        -6 lb-in2  Ixy=        0 lb-in2
Wt.=   193.7 lb    Y=      .0 in  Iy=        -8 lb-in2  Ixz=       -6 lb-in2
Inc     12.4 cont  Z=   300.0 in  Iz=         0 lb-in2  Iyz=        0 lb-in2
TOTAL SAVED  (Label MIDLBIN2)

------ REGISTERS CLEARED
```

Appendix E. HST Sequence of Events

```
                    HST SM4 SEQUENCE OF EVENTS (NOVEMBER 24, 2003)

ITEM                              WT    X cg    Y cg    Z cg     Ix      Iy      Iz
                        %         lb    -------- in --------    ------ sl-ft2 ------



SM4 SEQUENCE OF EVENTS
BEGINING WITH FINAL SM3B MASS PROPS (LMMS/P564090, 2/21/02, TABLE 5-24)
***********************************************************************
 HST POST SM3B: AP DR OPEN, HGA DEPLOYED, SA @ 0: INITIAL CONDITIONS
 NOBL6, ASLR, DSES AND DEPLETION OF CRYOGEN NOT ACCOUNTED FOR IN THAT RPT.
***********************************************************************

HST DPLD, S/A 0û          0    26222   255.2     1.4    -7.0 28173.0 65628.0 69190.0
 Delta POI (sl-ft2)                                          -596.0  1799.0  -348.0
+NOBL6                    0       10   269.5    58.0    58.0      .0      .0      .0
+ASLR                     0        2   178.8    84.0      .0      .0      .0      .0
+PLUS V2 DSE              0        1   110.0    72.7   -42.0      .0      .0      .0
+MINUS V3 DSE             0        1   110.0    42.0   -72.7      .0      .0      .0
-NICMOS CRYOGEN           0     -238   161.6    18.2   -18.1    -2.3    -6.3    -6.3

 -------------------------------------
 | TABLE 5-30 B, SA 0 DEG, HGA DEPL |
 -------------------------------------

POST SM3B EVENT 0 HST COORD
                   X=   256.0 in  Ix=     28171 sl-ft2  Ixy=     -518 sl-ft2
Wt.=   25998 lb    Y=     1.3 in  Iy=     65182 sl-ft2  Ixz=     1749 sl-ft2
                   Z=    -6.9 in  Iz=     68736 sl-ft2  Iyz=     -331 sl-ft2
TOTAL SAVED  (Label PRESM4)

Mass Properties Rotated  180 deg. about X
Pivot Point =  0  0  0
Mass Properties Rotated  270 deg. about Y
Pivot Point =  0  0  0
Mass Properties Translated by  1149.2  0  396.59

POST 3M3B EVENT 0 STS COORD INITIAL CONDITION
                   X=  1142.3 in  Ix=     68737 sl-ft2  Ixy=      331 sl-ft2
Wt.=   25998 lb    Y=    -1.3 in  Iy=     65182 sl-ft2  Ixz=     1750 sl-ft2
                   Z=   652.6 in  Iz=     28171 sl-ft2  Iyz=      518 sl-ft2
TOTAL SAVED  (Label 00)

 ---------------------
 | 0 DEG; TABLE 5-34 |
 ---------------------
        DIRECTION COSINES                    CORRESPONDING ANGLES
   .9955718  -.0842221  -.0417581          5.394     94.831     92.393
   .0835360   .9963440  -.0179138         85.208      4.901     91.026
   .0431142   .0143462   .9989674         87.529     89.178      2.604

PRINCIPAL MOIs = 68838.53 65164.05 28088.32  (sl-ft2)

------ REGISTERS CLEARED
***********************************************************************
```

```
 HST POST SM3B: AP DR OPEN, HGA DEPLOYED, SA @ 90 : INITIAL CONDITIONS
*********************************************************************
{PRESM4}POST SM3B EVENT   0    25998   256.0     1.3    -6.9 28170.8 65181.7 68736.4
 Delta POI (sl-ft2)                                          -518.4  1749.3  -331.0
-SA3 -V2 DPLYD @ 0 DEG    0     -583   318.7  -163.7     -.8  -755.6  -566.2  -206.4
+SA3 -V2 DPLYD @ 90 DEG   0      583   319.2  -163.7     1.3   206.0   566.0   756.0
-SA3 +V2 DPLYD @ 0 DEG    0     -583   318.7   163.8      .7  -755.6  -566.2  -206.4
+SA3 +V2 DPLYD @ 90 DEG   0      583   320.7   163.8     1.3   206.0   566.0   756.0

 -------------------------------------
 | TABLE 5-30 A, SA 90 DEG, HGA DEPL |
 -------------------------------------

EVENT 0 PRE SM4 HST COORD
                   X=   256.1 in  Ix=     27077 sl-ft2  Ixy=     -488 sl-ft2
Wt.=   25998 lb    Y=     1.3 in  Iy=     65226 sl-ft2  Ixz=     1773 sl-ft2
                   Z=    -6.8 in  Iz=     69876 sl-ft2  Iyz=     -362 sl-ft2
TOTAL SAVED  (Label TABLE529A)

Mass Properties Rotated  180 deg. about X
Pivot Point =  0  0  0
Mass Properties Rotated  270 deg. about Y
Pivot Point =  0  0  0
Mass Properties Translated by  1149.2  0  396.59

EVENT 0 RE SM4 STS COORD INITIAL CONDITION
                   X=  1142.4 in  Ix=     69876 sl-ft2  Ixy=      362 sl-ft2
Wt.=   25998 lb    Y=    -1.3 in  Iy=     65227 sl-ft2  Ixz=     1773 sl-ft2
                   Z=   652.7 in  Iz=     27077 sl-ft2  Iyz=      488 sl-ft2
TOTAL SAVED  (Label 529A)

 -----------------------
 | 90 DEG; TABLE 5-34 |
 -----------------------
        DIRECTION COSINES                    CORRESPONDING ANGLES
   .9965924  -.0719247  -.0403837          4.731     94.125     92.314
   .0713260   .9973238  -.0160782         85.910      4.193     90.921
   .0414320   .0131430   .9990552         87.625     89.247      2.491

PRINCIPAL MOIs = 69973.66 65208.66 26996.81  (sl-ft2)

------ REGISTERS CLEARED
*********************************************************************
 HST PRE SM4: AP DR CLOSED, HGA STOWED, SA @ 0 : INITIAL CONDITIONS (5-6C)
*********************************************************************
{PRESM4}POST SM3B EVENT   0    25998   256.0     1.3    -6.9 28170.8 65181.7 68736.4
 Delta POI (sl-ft2)                                          -518.4  1749.3  -331.0
-HGA+V3 DEPLOYED          0      -95   333.1      .6   191.1   -81.7   -81.2    -1.2
 Delta POI (sl-ft2)                                             .0      .1     1.5
-HGA-V3 DEPLOYED          0      -95   333.1     -.6  -190.7   -82.4   -81.2    -1.2
 Delta POI (sl-ft2)                                             .0     -.1     1.5
+HGA+V3 STOWED            0       95   451.7      .6    66.6     1.4    81.2    81.7
 Delta POI (sl-ft2)                                            1.5     3.7     -.1
+HGA-V3 STOWED            0       95   451.3     -.6   -66.6     1.4    81.9    82.2
 Delta POI (sl-ft2)                                            1.5     3.7     -.1
-AD OPEN                  0     -134   654.6      .8    69.2   -36.9   -47.0   -78.5
 Delta POI (sl-ft2)                                             .5   -11.8      .2
+AD CLOSED                0      134   610.6      .8    12.2    81.6    47.0    33.9
 Delta POI (sl-ft2)                                             .0     -.4     -.6
```

```
EVENT 0 PRE SM4 HST COORD
                   X=   256.7 in  Ix=     26585 sl-ft2  Ixy=     -521 sl-ft2
Wt.=   25998 lb    Y=     1.3 in  Iy=     64079 sl-ft2  Ixz=     1100 sl-ft2
                   Z=    -7.2 in  Iz=     69219 sl-ft2  Iyz=     -331 sl-ft2
TOTAL SAVED  (Label INIT)

Mass Properties Rotated  180 deg. about X
Pivot Point =  0  0  0
Mass Properties Rotated  270 deg. about Y
Pivot Point =  0  0  0
Mass Properties Translated by  1149.2  0  396.59

 -----------------------------------
 | TABLE 5-6 C, SA 0 DEG, HGA STOW |
 -----------------------------------

EVENT 0 RE SM4 STS COORD INITIAL CONDITION
                   X=  1142.0 in  Ix=     69219 sl-ft2  Ixy=      331 sl-ft2
Wt.=   25998 lb    Y=    -1.3 in  Iy=     64080 sl-ft2  Ixz=     1100 sl-ft2
                   Z=   653.3 in  Iz=     26586 sl-ft2  Iyz=      521 sl-ft2
TOTAL SAVED  (Label TABLEC)

------ REGISTERS CLEARED
****************************
 CONVERT SLUG-FT2 TO LB-IN2 - SKIPPED
****************************
UNI L,I,S,S,L,I,L,L
DEC 0,1,1,1,0,1,0,0
REC TABLEC
TOT TABLE 5-6C LB-IN2;TABLE5-6C2
CLE
****************************
****************************
*************************************************************************
 HST PRE SM4:  AP DR CLOSED, HGA DEPLOYED, SA @ 0: TABLE 5-6D
*************************************************************************
{PRESM4}POST SM3B EVENT   0    25998   256.0     1.3    -6.9 28170.8 65181.7 68736.4
 Delta POI (sl-ft2)                                          -518.4  1749.3  -331.0
-AD OPEN                  0     -134   654.6      .8    69.2   -36.9   -47.0   -78.5
 Delta POI (sl-ft2)                                              .5   -11.8      .2
+AD CLOSED                0      134   610.6      .8    12.2    81.6    47.0    33.9
 Delta POI (sl-ft2)                                              .0     -.4     -.6

AD CLOSE HGA DEP SA0
                   X=   255.8 in  Ix=     28059 sl-ft2  Ixy=     -517 sl-ft2
Wt.=   25998 lb    Y=     1.3 in  Iy=     64070 sl-ft2  Ixz=     1058 sl-ft2
                   Z=    -7.2 in  Iz=     67737 sl-ft2  Iyz=     -331 sl-ft2
TOTAL SAVED  (Label TABLE56D)

Mass Properties Rotated  180 deg. about X
Pivot Point =  0  0  0
Mass Properties Rotated  270 deg. about Y
Pivot Point =  0  0  0
Mass Properties Translated by  1149.2  0  396.59

 -----------------------------------
 | TABLE 5-6 D, SA 0 DEG, HGA DEPL|
 -----------------------------------
```

```
AD CLOSE HGA DEP SA0
                   X=  1142.0 in  Ix=     67737 sl-ft2  Ixy=      331 sl-ft2
Wt.=   25998 lb    Y=    -1.3 in  Iy=     64071 sl-ft2  Ixz=     1059 sl-ft2
                   Z=   652.4 in  Iz=     28059 sl-ft2  Iyz=      517 sl-ft2
TOTAL SAVED  (Label TABLED)

------ REGISTERS CLEARED
**********************************************************************
 HST PRE SM4:  AP DR CLOSED, HGA DEPLOYED, SA @ 90: TABLE 5-6B
**********************************************************************
{TABLE56D}AD CLOSE HGA D  0    25998   255.8     1.3    -7.2 28058.7 64069.8 67736.7
 Delta POI (sl-ft2)                                          -517.3  1058.0  -330.7
-SA3 -V2 DPLYD @ 0 DEG    0     -583   318.7  -163.7     -.8  -755.6  -566.2  -206.4
+SA3 -V2 DPLYD @ 90 DEG   0      583   319.2  -163.7     1.3   206.0   566.0   756.0
-SA3 +V2 DPLYD @ 0 DEG    0     -583   318.7   163.8      .7  -755.6  -566.2  -206.4
+SA3 +V2 DPLYD @ 90 DEG   0      583   320.7   163.8     1.3   206.0   566.0   756.0

AD CLOSE HGA DEP SA90
                   X=   255.9 in  Ix=     26965 sl-ft2  Ixy=     -487 sl-ft2
Wt.=   25998 lb    Y=     1.3 in  Iy=     64115 sl-ft2  Ixz=     1082 sl-ft2
                   Z=    -7.1 in  Iz=     68876 sl-ft2  Iyz=     -362 sl-ft2
TOTAL SAVED  (Label TABLE56B)

Mass Properties Rotated  180 deg. about X
Pivot Point =  0  0  0
Mass Properties Rotated  270 deg. about Y
Pivot Point =  0  0  0
Mass Properties Translated by  1149.2  0  396.59

 -------------------------------------
 | TABLE 5-6 B, SA 90 DEG, HGA DEPL |
 -------------------------------------

AD CLOSE HGA DEP SA90
                   X=  1142.1 in  Ix=     68876 sl-ft2  Ixy=      362 sl-ft2
Wt.=   25998 lb    Y=    -1.3 in  Iy=     64114 sl-ft2  Ixz=     1082 sl-ft2
                   Z=   652.5 in  Iz=     26965 sl-ft2  Iyz=      487 sl-ft2
TOTAL SAVED  (Label TABLEB)

------ REGISTERS CLEARED
**********************************************************************
 HST PRE SM4:  AP DR CLOSED, HGA STOWED, SA @ 90: TABLE 5-6A
**********************************************************************
{TABLE56B}AD CLOSE HGA D  0    25998   255.9     1.3    -7.1 26964.6 64114.6 68876.0
 Delta POI (sl-ft2)                                          -486.8  1082.0  -362.0
-HGA+V3 DEPLOYED          0      -95   333.1      .6   191.1   -81.7   -81.2    -1.2
 Delta POI (sl-ft2)                                             .0      .1     1.5
-HGA-V3 DEPLOYED          0      -95   333.1     -.6  -190.7   -82.4   -81.2    -1.2
 Delta POI (sl-ft2)                                             .0     -.1     1.5
+HGA+V3 STOWED            0       95   451.7      .6    66.6     1.4    81.2    81.7
 Delta POI (sl-ft2)                                            1.5     3.7     -.1
+HGA-V3 STOWED            0       95   451.3     -.6   -66.6     1.4    81.9    82.2
 Delta POI (sl-ft2)                                            1.5     3.7     -.1

AD CLOSE HGA DEP SA90
                   X=   256.7 in  Ix=     25491 sl-ft2  Ixy=     -490 sl-ft2
Wt.=   25998 lb    Y=     1.3 in  Iy=     64123 sl-ft2  Ixz=     1124 sl-ft2
                   Z=    -7.1 in  Iz=     70358 sl-ft2  Iyz=     -362 sl-ft2
TOTAL SAVED  (Label TABLE56A)
```

```
Mass Properties Rotated  180 deg. about X
Pivot Point =  0  0  0
Mass Properties Rotated  270 deg. about Y
Pivot Point =  0  0  0
Mass Properties Translated by  1149.2  0  396.59

 -----------------------------------
 | TABLE 5-6 A, SA 90 DEG, HGA STOW |
 -----------------------------------

AD CLOSE HGA STOW SA90
                   X=  1142.1 in  Ix=     70358 sl-ft2  Ixy=      362 sl-ft2
Wt.=   25998 lb    Y=    -1.3 in  Iy=     64124 sl-ft2  Ixz=     1124 sl-ft2
                   Z=   653.3 in  Iz=     25492 sl-ft2  Iyz=      490 sl-ft2
TOTAL SAVED  (Label TABLEA)

------ REGISTERS CLEARED
********************
 EVA DAYS START HERE
********************
***********************************************************************
 EVA DAY 1, EVENT 1: RSU (QTY 3) CHANGEOUT (-V3 FWD)
***********************************************************************
{INIT}EVENT 0 PRE SM4 HS  0    25998   256.7     1.3    -7.2 26584.7 64078.9 69219.3
 Delta POI (sl-ft2)                                        -520.5  1100.2  -330.9
-RSU1                     0      -24   192.9    30.6   -51.4    -4.5    -4.2    -4.2
+RSU1R                    0       24   192.9    30.6   -51.4     4.5     4.2     4.2
-RSU2R                    0      -24   192.9   -27.0   -52.2    -4.5    -4.2    -4.2
+RSU2R1                   0       24   192.9   -27.0   -52.2     4.5     4.2     4.2
-RSU3R                    0      -24   192.9   -44.0   -51.8    -4.5    -4.2    -4.2
+RSU3R1                   0       24   192.9   -44.0   -51.8     4.5     4.2     4.2


EVENT 1 HST COORD
                   X=   256.7 in  Ix=     26584 sl-ft2  Ixy=     -521 sl-ft2
Wt.=   25996 lb    Y=     1.3 in  Iy=     64077 sl-ft2  Ixz=     1099 sl-ft2
                   Z=    -7.2 in  Iz=     69218 sl-ft2  Iyz=     -331 sl-ft2
TOTAL SAVED  (Label A)

Mass Properties Rotated  180 deg. about X
Pivot Point =  0  0  0
Mass Properties Rotated  270 deg. about Y
Pivot Point =  0  0  0
Mass Properties Translated by  1149.2  0  396.59

EVENT 1 POST RSU (3 TOTAL) CHANGEOUT(-V3 FWD)
                   X=  1142.0 in  Ix=     69218 sl-ft2  Ixy=      331 sl-ft2
Wt.=   25996 lb    Y=    -1.3 in  Iy=     64078 sl-ft2  Ixz=     1099 sl-ft2
                   Z=   653.3 in  Iz=     26584 sl-ft2  Iyz=      521 sl-ft2
TOTAL SAVED  (Label 11)

------ REGISTERS CLEARED
*******************************************************************************
**
 EVA DAY 1, EVENT 2: DSC INSTALLATION (-V3 FWD)
*******************************************************************************
**
 BOTH SOLAR ARRAYS SLEWED TO 90 DEG
 NOTE PUT DSC AT DMU CG FOR INITIAL ESTIMATES
{A}EVENT 1 HST COORD      0    25996   256.7     1.3    -7.2 26583.8 64077.3 69218.0
```

```
 Delta POI (sl-ft2)                                          -520.8  1099.4  -331.1
-SA3 -V2 DPLYD @ 0 DEG    0     -583   318.7  -163.7     -.8  -755.6  -566.2  -206.4
+SA3 -V2 DPLYD @ 90 DEG   0      583   319.2  -163.7     1.3   206.0   566.0   756.0
-SA3 +V2 DPLYD @ 0 DEG    0     -583   318.7   163.8      .7  -755.6  -566.2  -206.4
+SA3 +V2 DPLYD @ 90 DEG   0      583   320.7   163.8     1.3   206.0   566.0   756.0
+DMU SIC&DH CROSS STRAP   0       17   280.7   -55.1   -55.1      .0      .0      .0


EVENT 2 HST COORD
                   X=   256.8 in  Ix=     25509 sl-ft2  Ixy=     -495 sl-ft2
Wt.=   26013 lb    Y=     1.2 in  Iy=     64132 sl-ft2  Ixz=     1119 sl-ft2
                   Z=    -7.1 in  Iz=     70370 sl-ft2  Iyz=     -353 sl-ft2
TOTAL SAVED  (Label B)

Mass Properties Rotated  180 deg. about X
Pivot Point =  0  0  0
Mass Properties Rotated  270 deg. about Y
Pivot Point =  0  0  0
Mass Properties Translated by  1149.2  0  396.59

EVENT 2 STS COORD (-V3 FWD) POST DSC INSTALLATION
                   X=  1142.1 in  Ix=     70370 sl-ft2  Ixy=      353 sl-ft2
Wt.=   26013 lb    Y=    -1.2 in  Iy=     64132 sl-ft2  Ixz=     1119 sl-ft2
                   Z=   653.4 in  Iz=     25510 sl-ft2  Iyz=      495 sl-ft2
TOTAL SAVED  (Label 21)

------ REGISTERS CLEARED
 ------------------
 | POST EVA DAY 1 |
 ------------------
*****************************************************************************
 EMERGENCY RELEASE:  BOTH SOLAR ARRAYS AT 90 FOR EMERGENCY RELEASE (-V3 FWD)
*****************************************************************************
{B}EVENT 2 HST COORD      0    26013   256.8     1.2    -7.1 25509.3 64131.9 70370.1
 Delta POI (sl-ft2)                                          -495.0  1119.0  -352.8
-HGA +V3 STOWED           0      -95   451.7      .6    66.6    -1.4   -81.2   -81.7
 Delta POI (sl-ft2)                                            -1.5    -3.7      .1
-HGA -V3 STOWED           0      -95   451.3     -.6   -66.6    -1.4   -81.9   -82.2
 Delta POI (sl-ft2)                                            -1.5    -3.7      .1
+HGA +V3 DEPLOYED         0       95   333.1      .6   191.1    81.7    81.2     1.2
 Delta POI (sl-ft2)                                             .0     -.1    -1.5
+HGA -V3 DEPLOYED         0       95   333.1     -.6  -190.7    82.4    81.2     1.2
 Delta POI (sl-ft2)                                             .0      .1    -1.5
-AD CLOSED                0     -134   610.6      .8    12.2   -81.6   -47.0   -33.9
 Delta POI (sl-ft2)                                             .0      .4      .6
+AD OPEN                  0      134   654.6      .8    69.2    36.9    47.0    78.5
 Delta POI (sl-ft2)                                            -.5    11.8     -.2

 ------------------------------
 | TABLE 5-11, POST EVA DAY 1 |
 ------------------------------

EVENT 2.5 HST COORD
                   X=   256.1 in  Ix=     27095 sl-ft2  Ixy=     -493 sl-ft2
Wt.=   26013 lb    Y=     1.2 in  Iy=     65235 sl-ft2  Ixz=     1768 sl-ft2
                   Z=    -6.8 in  Iz=     69888 sl-ft2  Iyz=     -353 sl-ft2
TOTAL SAVED  (Label BB)

Mass Properties Rotated  180 deg. about X
Pivot Point =  0  0  0
```

```
Mass Properties Rotated  270 deg. about Y
Pivot Point =  0  0  0
Mass Properties Translated by  1149.2  0  396.59

 ----------------------------------------
 | TABLE 5-12, POST EVA DAY 1, ORB COORD |
 ----------------------------------------

EVENT 2.5 STS COORD (-V3 FWD)EMERGENCY RELEASE
                   X=  1142.4 in  Ix=     69888 sl-ft2  Ixy=      353 sl-ft2
Wt.=   26013 lb    Y=    -1.2 in  Iy=     65236 sl-ft2  Ixz=     1769 sl-ft2
                   Z=   652.7 in  Iz=     27096 sl-ft2  Iyz=      493 sl-ft2
TOTAL SAVED  (Label 25)

------ REGISTERS CLEARED
***********************************************************************
 EVA DAY 2, EVENT 3: COS INSTALLATION (-V2 FWD)
***********************************************************************
{B}EVENT 2 HST COORD      0    26013   256.8     1.2    -7.1 25509.3 64131.9 70370.1
 Delta POI (sl-ft2)                                          -495.0  1119.0  -352.8
+COS                      0      907   161.5   -18.4    17.7    41.4   168.4   169.3
 Delta POI (sl-ft2)                                             .2    -4.5     1.5
-COSTAR                   0     -659   165.8   -17.3    17.7   -28.0  -101.0   -91.0
+COS THERMAL JOINT COVER  0        6   161.5   -18.4    17.7      .0      .0      .0


EVENT 3 HST COORD
                   X=   255.7 in  Ix=     25583 sl-ft2  Ixy=     -368 sl-ft2
Wt.=   26266 lb    Y=     1.0 in  Iy=     64837 sl-ft2  Ixz=      971 sl-ft2
                   Z=    -6.9 in  Iz=     71079 sl-ft2  Iyz=     -382 sl-ft2
TOTAL SAVED  (Label C)

Mass Properties Rotated  180 deg. about X
Pivot Point =  0  0  0
Mass Properties Rotated  270 deg. about Y
Pivot Point =  0  0  0
Mass Properties Translated by  1149.2  0  396.59
Mass Properties Rotated  90 deg. about Z
Pivot Point =  1149.2  0  0

EVENT 3 STS COORD (-V2 FWD) POST COS INSTALLATION
                   X=  1150.2 in  Ix=     64836 sl-ft2  Ixy=     -382 sl-ft2
Wt.=   26266 lb    Y=    -6.9 in  Iy=     71079 sl-ft2  Ixz=     -367 sl-ft2
                   Z=   652.3 in  Iz=     25582 sl-ft2  Iyz=      972 sl-ft2
TOTAL SAVED  (Label 31)

------ REGISTERS CLEARED
***********************************************************************
 EVA DAY 2, EVENT 4: NOBL 7 AND 8 INSTALLATION (+V3 FWD)
***********************************************************************
{C}EVENT 3 HST COORD      0    26266   255.7     1.0    -6.9 25582.9 64836.8 71079.3
 Delta POI (sl-ft2)                                          -367.5   971.4  -381.5
+NOBL 7                   0        9   269.5    20.9    79.4      .0      .0      .0
+NOBL 8                   0        9   269.5   -20.9    79.4      .0      .0      .0
-WIRE ASSY, BAY 7         0        0      .0      .0      .0      .0      .0      .0
-MLI, BAY 8               0        0      .0      .0      .0      .0      .0      .0
-MLI PATCHES, BAY 8       0        0      .0      .0      .0      .0      .0      .0
-WIRE, BAY 9              0        0      .0      .0      .0      .0      .0      .0
```

```
EVENT 4 HST COORD
                   X=   255.7 in  Ix=     25612 sl-ft2  Ixy=     -368 sl-ft2
Wt.=   26283 lb    Y=     1.0 in  Iy=     64865 sl-ft2  Ixz=      976 sl-ft2
                   Z=    -6.8 in  Iz=     71081 sl-ft2  Iyz=     -382 sl-ft2
TOTAL SAVED  (Label D)

Mass Properties Rotated  180 deg. about X
Pivot Point =  0  0  0
Mass Properties Rotated  270 deg. about Y
Pivot Point =  0  0  0
Mass Properties Translated by  1149.2  0  396.59
Mass Properties Rotated  180 deg. about Z
Pivot Point =  1149.2  0  0

EVENT 4 STS COORD (+V3 FWD) POST NOBL INSTALLATION
                   X=  1156.0 in  Ix=     71081 sl-ft2  Ixy=      382 sl-ft2
Wt.=   26283 lb    Y=     1.0 in  Iy=     64866 sl-ft2  Ixz=     -976 sl-ft2
                   Z=   652.3 in  Iz=     25611 sl-ft2  Iyz=     -368 sl-ft2
TOTAL SAVED  (Label 41)

------ REGISTERS CLEARED
**********************************************************************
 EVA DAY 2, EVENT 5: NOBL 5 INSTALLATION (+V3 FWD)
**********************************************************************
{D}EVENT 4 HST COORD      0    26283   255.7     1.0    -6.8 25611.8 64864.7 71081.5
 Delta POI (sl-ft2)                                          -367.6   975.7  -381.9
+NOBL 5                   0        9   269.5    78.7    22.5      .0      .0      .0
-NOBL VENT PLUGS          0       -1   269.5    78.7    22.5      .0      .0      .0
-MLI BAY 5                0        0      .0      .0      .0      .0      .0      .0


EVENT 5 HST COORD
                   X=   255.7 in  Ix=     25624 sl-ft2  Ixy=     -366 sl-ft2
Wt.=   26292 lb    Y=     1.0 in  Iy=     64867 sl-ft2  Ixz=      976 sl-ft2
                   Z=    -6.8 in  Iz=     71093 sl-ft2  Iyz=     -378 sl-ft2
TOTAL SAVED  (Label E)

Mass Properties Rotated  180 deg. about X
Pivot Point =  0  0  0
Mass Properties Rotated  270 deg. about Y
Pivot Point =  0  0  0
Mass Properties Translated by  1149.2  0  396.59
Mass Properties Rotated  180 deg. about Z
Pivot Point =  1149.2  0  0

EVENT 5 STS COORD, POST NOBL 5 ADDITION (+V3 FWD)
                   X=  1156.0 in  Ix=     71093 sl-ft2  Ixy=      378 sl-ft2
Wt.=   26292 lb    Y=     1.0 in  Iy=     64866 sl-ft2  Ixz=     -976 sl-ft2
                   Z=   652.3 in  Iz=     25623 sl-ft2  Iyz=     -366 sl-ft2
TOTAL SAVED  (Label 51)

------ REGISTERS CLEARED
 ------------------
 | POST EVA DAY 2 |
 ------------------
**********************************************************************
 EMERGENCY RELEASE: SLEW +SA3 AND -SA3 TO 90 FOR RELEASE
**********************************************************************
{E}EVENT 5 HST COORD      0    26292   255.7     1.0    -6.8 25624.1 64866.6 71092.7
 Delta POI (sl-ft2)                                          -365.7   976.5  -377.8
```

```
-SA3 -V2 DPLYD @ 0 DEG    0     -583   318.7  -163.7     -.8  -755.6  -566.2  -206.4
-SA3 +V2 DPLYD @ 0 DEG    0     -583   318.7   163.8      .7  -755.6  -566.2  -206.4
+SA3 -V2 DPLYD @ 90 DEG   0      583   319.2  -163.7     1.3   206.4   566.2   755.6
+SA3 +V2 DPLYD @ 90 DEG   0      583   320.7   163.8     1.3   206.4   566.2   755.6
-HGA+V3 STOWED            0      -95   451.7      .6    66.6    -1.4   -81.2   -81.7
 Delta POI (sl-ft2)                                              -1.5    -3.7      .1
-HGA-V3 STOWED            0      -95   451.3     -.6   -66.6    -1.4   -81.9   -82.2
 Delta POI (sl-ft2)                                              -1.5    -3.7      .1
+HGA+V3 DEPLOYED          0       95   333.1      .6   191.1    81.7    81.2     1.2
 Delta POI (sl-ft2)                                               .0     -.1    -1.5
+HGA-V3 DEPLOYED          0       95   333.1     -.6  -190.7    82.4    81.2     1.2
 Delta POI (sl-ft2)                                               .1    -1.5      .0
-AD CLOSED                0     -134   610.6      .8    12.2   -81.6   -47.0   -33.9
 Delta POI (sl-ft2)                                               .0      .4      .6
+AD OPEN                  0      134   654.6      .8    69.2    36.9    47.0    78.5
 Delta POI (sl-ft2)                                              -.5    11.8     -.2

 ------------------------------
 | TABLE 5-16, POST EVA DAY 2 |
 ------------------------------

EVENT 5.5 HST COORD
                   X=   255.2 in  Ix=     26115 sl-ft2  Ixy=     -334 sl-ft2
Wt.=   26292 lb    Y=     1.0 in  Iy=     66007 sl-ft2  Ixz=     1651 sl-ft2
                   Z=    -6.5 in  Iz=     71742 sl-ft2  Iyz=     -407 sl-ft2
TOTAL SAVED  (Label EE)

Mass Properties Rotated  180 deg. about X
Pivot Point =  0  0  0
Mass Properties Rotated  270 deg. about Y
Pivot Point =  0  0  0
Mass Properties Translated by  1149.2  0  396.59

 ----------------------------------------
 | TABLE 5-17, POST EVA DAY 2, ORB COORD |
 ----------------------------------------

EVENT 5.5 STS COORD (-V3 FWD)EMERGENCY RELEASE
                   X=  1142.7 in  Ix=     71742 sl-ft2  Ixy=      407 sl-ft2
Wt.=   26292 lb    Y=    -1.0 in  Iy=     66007 sl-ft2  Ixz=     1651 sl-ft2
                   Z=   651.8 in  Iz=     26117 sl-ft2  Iyz=      334 sl-ft2
TOTAL SAVED  (Label 55)

------ REGISTERS CLEARED
**********************************************************************
 EVA DAY 3, EVENT 6: WFC3 INSTALLATION (-V3 FWD)
**********************************************************************
 SOLAR ARRAYS SLEWED TO 0 FOR CHANGEOUT
 WFC3 MOI'S NOT AVAILABLE (INCREASE WFPCII INERTIAS BY 963.6/609.0 RATIO)
{E}EVENT 5 HST COORD      0    26292   255.7     1.0    -6.8 25624.1 64866.6 71092.7
 Delta POI (sl-ft2)                                            -365.7   976.5  -377.8
-SA3 -V2 DPLYD @ 90 DEG   0     -583   319.2  -163.7     1.3  -206.0  -566.0  -756.0
+SA3 -V2 DPLYD @ 0 DEG    0      583   318.7  -163.7     -.8   755.6   566.2   206.4
-SA3 +V2 DPLYD @ 90 DEG   0     -583   320.7   163.8     1.3  -206.0  -566.0  -756.0
+SA3 +V2 DPLYD @ 0 DEG    0      583   318.7   163.8      .7   755.6   566.2   206.4
-WFPC II                  0     -620   218.6    -1.2   -49.5   -49.0   -46.0   -28.0
+WFC3                     0      964   218.7      .7   -53.7   144.3   101.0    61.3
 Delta POI (sl-ft2)                                              2.3     1.1      .1
```

```
EVENT 6 HST COORD
                   X=   255.2 in  Ix=     27023 sl-ft2  Ixy=     -402 sl-ft2
Wt.=   26636 lb    Y=     1.1 in  Iy=     65186 sl-ft2  Ixz=     1100 sl-ft2
                   Z=    -7.6 in  Iz=     70085 sl-ft2  Iyz=     -356 sl-ft2
TOTAL SAVED  (Label F)

Mass Properties Rotated  180 deg. about X
Pivot Point =  0  0  0
Mass Properties Rotated  270 deg. about Y
Pivot Point =  0  0  0
Mass Properties Translated by  1149.2  0  396.59

EVENT 6 STS COORD (-V3 FWD) POST WFPC3 INSTALLATION
                   X=  1141.6 in  Ix=     70085 sl-ft2  Ixy=      356 sl-ft2
Wt.=   26636 lb    Y=    -1.1 in  Iy=     65187 sl-ft2  Ixz=     1101 sl-ft2
                   Z=   651.8 in  Iz=     27024 sl-ft2  Iyz=      402 sl-ft2
TOTAL SAVED  (Label 61)

------ REGISTERS CLEARED
**********************************************************************
 EVA DAY 3, EVENT 7: BATTERY CHANGOUT (-V3 FWD)
**********************************************************************
{F}EVENT 6 HST COORD      0    26636   255.2     1.1    -7.6 27023.1 65186.3 70085.3
 Delta POI (sl-ft2)                                          -402.3  1100.4  -355.7
-BAY 2 BATTERY MODULE     0     -464   277.9   -18.7   -73.3    -9.2   -12.7   -10.3
-BAY 3 BATTERY MODULE     0     -464   277.9    19.7   -73.1    -9.2   -12.7   -10.3
+BAY 2 BATTERY MODULE     0      460   277.9   -18.7   -73.3     9.1    12.6    10.2
+BAY 3 BATTERY MODULE     0      460   277.9    19.7   -73.1     9.1    12.6    10.2


EVENT 7 HST COORD
                   X=   255.2 in  Ix=     27015 sl-ft2  Ixy=     -402 sl-ft2
Wt.=   26628 lb    Y=     1.1 in  Iy=     65178 sl-ft2  Ixz=     1103 sl-ft2
                   Z=    -7.6 in  Iz=     70084 sl-ft2  Iyz=     -356 sl-ft2
TOTAL SAVED  (Label G)

Mass Properties Rotated  180 deg. about X
Pivot Point =  0  0  0
Mass Properties Rotated  270 deg. about Y
Pivot Point =  0  0  0
Mass Properties Translated by  1149.2  0  396.59

EVENT 7 STS COORD (-V3 FWD) POST BATTERY CHANGEOUT
                   X=  1141.6 in  Ix=     70084 sl-ft2  Ixy=      356 sl-ft2
Wt.=   26628 lb    Y=    -1.1 in  Iy=     65178 sl-ft2  Ixz=     1103 sl-ft2
                   Z=   651.8 in  Iz=     27014 sl-ft2  Iyz=      402 sl-ft2
TOTAL SAVED  (Label 71)

------ REGISTERS CLEARED
 ------------------
 | POST EVA DAY 3 |
 ------------------
**********************************************************************
 EMERGENCY RELEASE: +SA3 AND -SA3 AT 90
**********************************************************************
{G}EVENT 7 HST COORD      0    26628   255.2     1.1    -7.6 27014.8 65177.9 70083.6
 Delta POI (sl-ft2)                                          -402.3  1103.0  -355.8
-SA3 (+WING) @ -15 DEG;-583,318.9,163.1,1.3,-719,-566,-243
+SA3 (+WING) DPLYD @ 0 DEG;583,319.34,163.1,1.53,755.6,566.2,206.4
-SA3 -V2 DPLYD @ 180 DEG;-583,320.0,-163.1,-1.5,-756,-566,-206
```

```
-SA3 +V2 DPLYD @ 160 DEG;-583,321.2,163.1,-1.2,-691,-566,-271
+SA3 +V2 DPLYD @ 0 DEG;583,319.34,163.1,1.53,755.6,566.2,206.4
+SA3 -V2 DPLYD @ 0 DEG;583,319.34,-163.1,1.53,755.6,566.2,206.4
-SA3 -V2 DPLYD @ 0 DEG    0     -583   318.7  -163.7     -.8  -755.6  -566.2  -206.4
-SA3 +V2 DPLYD @ 0 DEG    0     -583   318.7   163.8      .7  -755.6  -566.2  -206.4
+SA3 -V2 DPLYD @ 90 DEG   0      583   319.2  -163.7     1.3   206.4   566.2   755.6
+SA3 +V2 DPLYD @ 90 DEG   0      583   320.7   163.8     1.3   206.4   566.2   755.6
-HGA+V3 STOWED            0      -95   451.7      .6    66.6    -1.4   -81.2   -81.7
 Delta POI (sl-ft2)                                              -1.5    -3.7      .1
-HGA-V3 STOWED            0      -95   451.3     -.6   -66.6    -1.4   -81.9   -82.2
 Delta POI (sl-ft2)                                              -1.5    -3.7      .1
+HGA+V3 DEPLOYED          0       95   333.1      .6   191.1    81.7    81.2     1.2
 Delta POI (sl-ft2)                                               .0     -.1    -1.5
+HGA-V3 DEPLOYED          0       95   333.1     -.6  -190.7    82.4    81.2     1.2
 Delta POI (sl-ft2)                                               .1    -1.5      .0
-AD CLOSED                0     -134   610.6      .8    12.2   -81.6   -47.0   -33.9
 Delta POI (sl-ft2)                                               .0      .4      .6
+AD OPEN                  0      134   654.6      .8    69.2    36.9    47.0    78.5
 Delta POI (sl-ft2)                                              -.5    11.8     -.2

 ------------------------------
 | TABLE 5-20, POST EVA DAY 3 |
 ------------------------------

EVENT 7.5 HST COORD
                    X=   254.6 in  Ix=     27509 sl-ft2  Ixy=     -370 sl-ft2
Wt.=   26628 lb     Y=     1.1 in  Iy=     66318 sl-ft2  Ixz=     1776 sl-ft2
                    Z=    -7.2 in  Iz=     70729 sl-ft2  Iyz=     -385 sl-ft2
TOTAL SAVED  (Label GG)

Mass Properties Rotated  180 deg. about X
Pivot Point =  0  0  0
Mass Properties Rotated  270 deg. about Y
Pivot Point =  0  0  0
Mass Properties Translated by  1149.2  0  396.59

 ----------------------------------------
 | TABLE 5-21, POST EVA DAY 3, ORB COORD |
 ----------------------------------------

EVENT 7.5 STS COORD (-V3 FWD)EMERGENCY RELEASE
                    X=  1142.0 in  Ix=     70730 sl-ft2  Ixy=      385 sl-ft2
Wt.=   26628 lb     Y=    -1.1 in  Iy=     66318 sl-ft2  Ixz=     1776 sl-ft2
                    Z=   651.2 in  Iz=     27509 sl-ft2  Iyz=      370 sl-ft2
TOTAL SAVED  (Label 75)

------ REGISTERS CLEARED
***********************************************************************
 EVA DAY 4, EVENT 8: ASCS/CPL/RADIATOR (-V2/-V3)
***********************************************************************
{G}EVENT 7 HST COORD      0    26628   255.2     1.1    -7.6 27014.8 65177.9 70083.6
 Delta POI (sl-ft2)                                          -402.3  1103.0  -355.8
+ASCS RADIATOR PANEL      0      428   154.7   -60.8   -54.1    44.4   246.6   212.0
 Delta POI (sl-ft2)                                            12.8     4.6    -5.5
+ASCS CRYO VENT INSERT    0        3   101.5   -45.0    18.0      .0      .0      .0
+AS -V2 DSE -V2           0        1   110.0   -72.7   -42.0      .0      .0      .0
+AS -V3 DSE -V3           0        1   110.0   -42.0   -72.7      .0      .0      .0
-ESM CONNECTOR CAP ASSY   0       -4   116.0   -60.7    72.1      .0      .0      .0
-BAY 4 CRYO VENT COVER    0       -6   101.5   -45.0    18.0      .0      .0      .0
```

```
EVENT 8 HST COORD
                   X=   253.6 in  Ix=     27597 sl-ft2  Ixy=      169 sl-ft2
Wt.=   27051 lb    Y=      .1 in  Iy=     66516 sl-ft2  Ixz=     1546 sl-ft2
                   Z=    -8.3 in  Iz=     71540 sl-ft2  Iyz=      -94 sl-ft2
TOTAL SAVED  (Label H)

Mass Properties Rotated  180 deg. about X
Pivot Point =  0  0  0
Mass Properties Rotated  270 deg. about Y
Pivot Point =  0  0  0
Mass Properties Translated by  1149.2  0  396.59
Mass Properties Rotated  45 deg. about Z
Pivot Point =  1149.2  0  0

EVENT 8 STS COORD (-V2 /-V3 FWD), POST ASCS CPL AND RADIATOR
                   X=  1143.4 in  Ix=     69122 sl-ft2  Ixy=    -2512 sl-ft2
Wt.=   27051 lb    Y=    -6.0 in  Iy=     68933 sl-ft2  Ixz=     1212 sl-ft2
                   Z=   650.2 in  Iz=     27597 sl-ft2  Iyz=      973 sl-ft2
TOTAL SAVED  (Label 81)

------ REGISTERS CLEARED
***********************************************************************
 EVA DAY 4, EVENT 9: STIK INSTALLATION (+V2 FWD)
***********************************************************************
{H}EVENT 8 HST COORD      0    27051   253.6      .1    -8.3 27597.1 66515.6 71539.8
 Delta POI (sl-ft2)                                          168.7  1545.6   -94.3
+STIK                     0       60   119.8    35.4    19.1     1.7     1.1     2.4


EVENT 9 HST COORD
                   X=   253.3 in  Ix=     27625 sl-ft2  Ixy=      108 sl-ft2
Wt.=   27111 lb    Y=      .2 in  Iy=     66758 sl-ft2  Ixz=     1498 sl-ft2
                   Z=    -8.3 in  Iz=     71790 sl-ft2  Iyz=      -82 sl-ft2
TOTAL SAVED  (Label I)

Mass Properties Rotated  180 deg. about X
Pivot Point =  0  0  0
Mass Properties Rotated  270 deg. about Y
Pivot Point =  0  0  0
Mass Properties Translated by  1149.2  0  396.59
Mass Properties Rotated -90 deg. about Z
Pivot Point =  1149.2  0  0

EVENT 9 STS COORD (+V2 FWD) POST STIK INSTALLATION
                   X=  1149.0 in  Ix=     66758 sl-ft2  Ixy=      -82 sl-ft2
Wt.=   27111 lb    Y=     8.3 in  Iy=     71791 sl-ft2  Ixz=     -107 sl-ft2
                   Z=   649.9 in  Iz=     27624 sl-ft2  Iyz=    -1498 sl-ft2
TOTAL SAVED  (Label 91)

------ REGISTERS CLEARED
 ------------------
 | POST EVA DAY 4 |
 ------------------
***********************************************************************
 EMERGENCY RELEASE: +SA3 AND -SA3 AT 90
***********************************************************************
{I}EVENT 9 HST COORD      0    27111   253.3      .2    -8.3 27624.6 66758.3 71790.2
 Delta POI (sl-ft2)                                          107.6  1498.1   -81.8
-SA3 -V2 DPLYD @ 0 DEG    0     -583   318.7  -163.7     -.8  -755.6  -566.2  -206.4
```

```
-SA3 +V2 DPLYD @ 0 DEG    0     -583   318.7   163.8      .7  -755.6  -566.2  -206.4
+SA3 -V2 DPLYD @ 90 DEG   0      583   319.2  -163.7     1.3   206.4   566.2   755.6
+SA3 +V2 DPLYD @ 90 DEG   0      583   320.7   163.8     1.3   206.4   566.2   755.6
-HGA+V3 STOWED            0      -95   451.7      .6    66.6    -1.4   -81.2   -81.7
 Delta POI (sl-ft2)                                              -1.5    -3.7      .1
-HGA-V3 STOWED            0      -95   451.3     -.6   -66.6    -1.4   -81.9   -82.2
 Delta POI (sl-ft2)                                              -1.5    -3.7      .1
+HGA+V3 DEPLOYED          0       95   333.1      .6   191.1    81.7    81.2     1.2
 Delta POI (sl-ft2)                                               .0     -.1    -1.5
+HGA-V3 DEPLOYED          0       95   333.1     -.6  -190.7    82.4    81.2     1.2
 Delta POI (sl-ft2)                                               .1    -1.5      .0
-AD CLOSED                0     -134   610.6      .8    12.2   -81.6   -47.0   -33.9
 Delta POI (sl-ft2)                                               .0      .4      .6
+AD OPEN                  0      134   654.6      .8    69.2    36.9    47.0    78.5
 Delta POI (sl-ft2)                                              -.5    11.8     -.2

 ------------------------------
 | TABLE 5-24, POST EVA DAY 4 |
 ------------------------------

EVENT 9.5 HST COORD
                   X=   252.8 in  Ix=     28122 sl-ft2  Ixy=      137 sl-ft2
Wt.=   27111 lb    Y=      .2 in  Iy=     67889 sl-ft2  Ixz=     2173 sl-ft2
                   Z=    -7.9 in  Iz=     72424 sl-ft2  Iyz=     -110 sl-ft2
TOTAL SAVED  (Label II)

Mass Properties Rotated  180 deg. about X
Pivot Point =  0  0  0
Mass Properties Rotated  270 deg. about Y
Pivot Point =  0  0  0
Mass Properties Translated by  1149.2  0  396.59

 ----------------------------------------
 | TABLE 5-25, POST EVA DAY 4, ORB COORD |
 ----------------------------------------

EVENT 9.5 STS COORD (-V3 FWD)EMERGENCY RELEASE
                   X=  1141.3 in  Ix=     72424 sl-ft2  Ixy=      110 sl-ft2
Wt.=   27111 lb    Y=     -.2 in  Iy=     67889 sl-ft2  Ixz=     2173 sl-ft2
                   Z=   649.4 in  Iz=     28121 sl-ft2  Iyz=     -137 sl-ft2
TOTAL SAVED  (Label 95)

------ REGISTERS CLEARED
*********************************************************************
 EVA DAY 5, EVENT 10: FGS 3 INSTALLATION (+V2 FWD)
*********************************************************************
{I}EVENT 9 HST COORD      0    27111   253.3      .2    -8.3 27624.6 66758.3 71790.2
 Delta POI (sl-ft2)                                            107.6  1498.1   -81.8
-FGS3                     0     -478   219.3    40.2      .6   -40.8   -16.6   -31.5
 Delta POI (sl-ft2)                                              -.1      .2      .5
+FGS3R                    0      467   219.3    39.7      .7    39.9    16.2    30.8
 Delta POI (sl-ft2)                                               .1     -.2     -.5


EVENT 10 HST COORD
                   X=   253.4 in  Ix=     27616 sl-ft2  Ixy=      112 sl-ft2
Wt.=   27101 lb    Y=      .2 in  Iy=     66755 sl-ft2  Ixz=     1498 sl-ft2
                   Z=    -8.3 in  Iz=     71779 sl-ft2  Iyz=      -83 sl-ft2
TOTAL SAVED  (Label J)
```

```
Mass Properties Rotated  180 deg. about X
Pivot Point =  0  0  0
Mass Properties Rotated  270 deg. about Y
Pivot Point =  0  0  0
Mass Properties Translated by  1149.2  0  396.59
Mass Properties Rotated -90 deg. about Z
Pivot Point =  1149.2  0  0

EVENT 10 STS COORD, POST NCS RADIATOR ADDITION (+V2 FWD)
                   X=  1149.0 in  Ix=     66756 sl-ft2  Ixy=      -83 sl-ft2
Wt.=   27101 lb    Y=     8.3 in  Iy=     71779 sl-ft2  Ixz=     -112 sl-ft2
                   Z=   650.0 in  Iz=     27615 sl-ft2  Iyz=    -1499 sl-ft2
TOTAL SAVED  (Label 101)

------ REGISTERS CLEARED
**********************************************************************
 HST FULLY DEPLOYED ON ORBIT SA3 AT 0 DEG.
**********************************************************************
{J}EVENT 10 HST COORD     0    27101   253.4      .2    -8.3 27616.1 66755.2 71779.2
 Delta POI (sl-ft2)                                          112.4  1498.4   -82.6
-HGA+V3 STOWED            0      -95   451.7      .6    66.6    -1.4   -81.2   -81.7
 Delta POI (sl-ft2)                                           -1.5    -3.7      .1
-HGA-V3 STOWED            0      -95   451.3     -.6   -66.6    -1.4   -81.9   -82.2
 Delta POI (sl-ft2)                                           -1.5    -3.7      .1
+HGA+V3 DEPLOYED          0       95   333.1      .6   191.1    81.7    81.2     1.2
 Delta POI (sl-ft2)                                             .0     -.1    -1.5
+HGA-V3 DEPLOYED          0       95   333.1     -.6  -190.7    82.4    81.2     1.2
 Delta POI (sl-ft2)                                             .1    -1.5      .0
-AD CLOSED                0     -134   610.6      .8    12.2   -81.6   -47.0   -33.9
 Delta POI (sl-ft2)                                             .0      .4      .6
+AD OPEN                  0      134   654.6      .8    69.2    36.9    47.0    78.5
 Delta POI (sl-ft2)                                            -.5    11.8     -.2

 ----------------------------------------------
 | TABLE 5-32 B, POST SM4, HGA DEPL, SA O DEG |
 ----------------------------------------------

HST DEPLOYED, SA3 AT 0 DEG.
                   X=   252.7 in  Ix=     29206 sl-ft2  Ixy=      111 sl-ft2
Wt.=   27101 lb    Y=      .2 in  Iy=     67838 sl-ft2  Ixz=     2148 sl-ft2
                   Z=    -8.0 in  Iz=     71272 sl-ft2  Iyz=      -79 sl-ft2
TOTAL SAVED  (Label K)

 ---------------------
 | 0 DEG; TABLE 5-35 |
 ---------------------
        DIRECTION COSINES                    CORRESPONDING ANGLES
   .9987028   .0027481   .0508469          2.919     89.843     87.085
  -.0015257   .9997094  -.0240649         90.087      1.381     91.379
  -.0508982   .0239561   .9984168         92.918     88.627      3.225

PRINCIPAL MOIs = 29096.25 67836.08 71383.87  (sl-ft2)

------ REGISTERS CLEARED
*****************************************************************************
 HST FULLY DEPLOYED ON ORBIT SA3 AT 90 DEG (HGAS DEPLOYED AND AD OPEN)
*****************************************************************************
{K}HST DEPLOYED, SA3 AT   0    27101   252.7      .2    -8.0 29205.9 67837.8 71272.5
 Delta POI (sl-ft2)                                          110.6  2147.5   -79.4
-SA3 -V2 DPLYD @ 0 DEG    0     -583   318.7  -163.7     -.8  -755.6  -566.2  -206.4
```

```
-SA3 +V2 DPLYD @ 0 DEG    0     -583   318.7   163.8      .7  -755.6  -566.2  -206.4
+SA3 -V2 DPLYD @ 90 DEG   0      583   319.2  -163.7     1.3   206.4   566.2   755.6
+SA3 +V2 DPLYD @ 90 DEG   0      583   320.7   163.8     1.3   206.4   566.2   755.6

 ----------------------------------------------
 | TABLE 5-32 A, POST SM4, HGA DEPL, SA 9O DEG |
 ----------------------------------------------

HST DEPLOYED, SA3 AT 90 DEG.
                   X=   252.8 in  Ix=     28113 sl-ft2  Ixy=      142 sl-ft2
Wt.=   27101 lb    Y=      .2 in  Iy=     67886 sl-ft2  Ixz=     2173 sl-ft2
                   Z=    -7.9 in  Iz=     72413 sl-ft2  Iyz=     -110 sl-ft2
TOTAL SAVED  (Label L)

 ----------------------
 | 90 DEG; TABLE 5-35 |
 ----------------------
        DIRECTION COSINES                    CORRESPONDING ANGLES
   .9987998   .0034092   .0488635          2.807     89.805     87.199
  -.0021694   .9996752  -.0254028         90.124      1.460     91.456
  -.0489343   .0252663   .9984826         92.805     88.552      3.157

PRINCIPAL MOIs = 28006.4 67883.08 72522.23  (sl-ft2)

------ REGISTERS CLEARED
**********************************************************************
 HST FULLY DEPLOYED ON ORBIT SA3 AT 0 DEG.
**********************************************************************
{J}EVENT 10 HST COORD     0    27101   253.4      .2    -8.3 27616.1 66755.2 71779.2
 Delta POI (sl-ft2)                                            112.4  1498.4   -82.6
-HGA+V3 STOWED            0      -95   451.7      .6    66.6    -1.4   -81.2   -81.7
 Delta POI (sl-ft2)                                             -1.5    -3.7      .1
-HGA-V3 STOWED            0      -95   451.3     -.6   -66.6    -1.4   -81.9   -82.2
 Delta POI (sl-ft2)                                             -1.5    -3.7      .1
+HGA+V3 DEPLOYED          0       95   333.1      .6   191.1    81.7    81.2     1.2
 Delta POI (sl-ft2)                                               .0     -.1    -1.5
+HGA-V3 DEPLOYED          0       95   333.1     -.6  -190.7    82.4    81.2     1.2
 Delta POI (sl-ft2)                                               .0      .1    -1.5
-AD CLOSED                0     -134   610.6      .8    12.2   -81.6   -47.0   -33.9
 Delta POI (sl-ft2)                                               .0      .4      .6
+AD OPEN                  0      134   654.6      .8    69.2    36.9    47.0    78.5
 Delta POI (sl-ft2)                                              -.5    11.8     -.2

 -------------------------------------------------------
 | TABLE 5-33 B, POST SM4, HGA DEPL, SA O DEG - METRIC |
 -------------------------------------------------------

HST DEPLOYED, SA3 AT 0 DEG.
                   X=     6.4 m  Ix=     39598 kg-m2  Ixy=      150 kg-m2
Wt.=   12293 kg    Y=      .0 m  Iy=     91976 kg-m2  Ixz=     2914 kg-m2
                   Z=     -.2 m  Iz=     96632 kg-m2  Iyz=     -110 kg-m2
TOTAL SAVED  (Label K)

------ REGISTERS CLEARED
**********************************************************************
 HST FULLY DEPLOYED ON ORBIT SA3 AT 90 DEG.
**********************************************************************
                          %       kg    --------- m --------    ------- kg-m2 ------

{K}HST DEPLOYED, SA3 AT   0    12293     6.4      .0     -.2 39597.8 91975.6 96632.3
```

```
 Delta POI (kg-m2)                                                149.9  2913.8  -109.7
                          %       lb    -------- in --------    ------ sl-ft2 ------

-SA3 -V2 DPLYD @ 0 DEG    0     -583   318.7  -163.7     -.8  -755.6  -566.2  -206.4
-SA3 +V2 DPLYD @ 0 DEG    0     -583   318.7   163.8      .7  -755.6  -566.2  -206.4
+SA3 -V2 DPLYD @ 90 DEG   0      583   319.2  -163.7     1.3   206.4   566.2   755.6
+SA3 +V2 DPLYD @ 90 DEG   0      583   320.7   163.8     1.3   206.4   566.2   755.6

 ---------------------------------------------------------
 | TABLE 5-33 A, POST SM4, HGA DEPL, SA 9O DEG - METRIC |
 ---------------------------------------------------------

HST DEPLOYED, SA AT 90 DEG.
                  X=     6.4 m  Ix=     38116 kg-m2  Ixy=      192 kg-m2
Wt.=   12293 kg   Y=      .0 m  Iy=     92040 kg-m2  Ixz=     2948 kg-m2
                  Z=     -.2 m  Iz=     98179 kg-m2  Iyz=     -152 kg-m2
TOTAL SAVED  (Label L)

------ REGISTERS CLEARED

CALCULATE CARRIER SEQUENCED MASS PROPERTIES BASED ON JUSTIN WARD DATA EFFECTIVE MAY
2003
EVENT 1 RSU (3) INSTALLATION
EVENT 2 DSC INSTALLATION
EVENT 3 COS INSTALLATION
EVENT 4 NOBL 7 AND 8 INSTALLATION
EVENT 5 NOBL 5 INSTALLATION
EVENT 6 WFC3 INSTALLATION
EVENT 7 BATTERY MODULE (2) CHANGEOUT
EVENT 8 ASCS/CPL/RADIATOR INSTALLATION
EVENT 9 STIK INSTALLATION
EVENT 10 FGS 3 INSTALLATION
*******************************************************************************
MIDDECK & TSA IN ORBITER COORDINATES
WHEN REMOVING HARDWARE, BOTH THE WEIGHT AND INERTIA TERMS SHOULD BE MADE NEGATIVE
                          %       lb    -------- in --------    ------ lb-in2 ------

MIDDECK AT LAUNCH         0      194   520.0      .0   300.0       0       0       0

MIDDECK AT LAUNCH
                  X=   520.0 in  Ix=         0 sl-ft2  Ixy=        0 sl-ft2
Wt.=     194 lb   Y=      .0 in  Iy=         0 sl-ft2  Ixz=        0 sl-ft2
                  Z=   300.0 in  Iz=         0 sl-ft2  Iyz=        0 sl-ft2
TOTAL SAVED  (Label MIDDECK LH)

+RSU CONN CAP             0        1   520.0      .0   300.0       0       0       0
+RSU CONN CAP             0        1   520.0      .0   300.0       0       0       0
+RSU CONN CAP             0        1   520.0      .0   300.0       0       0       0

MIDDECK 1
                  X=   520.0 in  Ix=         0 sl-ft2  Ixy=        0 sl-ft2
Wt.=     196 lb   Y=      .0 in  Iy=         0 sl-ft2  Ixz=        0 sl-ft2
                  Z=   300.0 in  Iz=         0 sl-ft2  Iyz=        0 sl-ft2
TOTAL SAVED  (Label MIDDECK 1)

+DSC HMD                  0        3   520.0      .0   300.0       0       0       0

MIDDECK 2
                  X=   520.0 in  Ix=         0 sl-ft2  Ixy=        0 sl-ft2
Wt.=     198 lb   Y=      .0 in  Iy=         0 sl-ft2  Ixz=        0 sl-ft2
```

```
                    Z=   300.0 in  Iz=         0 sl-ft2  Iyz=        0 sl-ft2
TOTAL SAVED  (Label MIDDECK 2)


MIDDECK 3
                    X=   520.0 in  Ix=         0 sl-ft2  Ixy=        0 sl-ft2
Wt.=     198 lb     Y=      .0 in  Iy=         0 sl-ft2  Ixz=        0 sl-ft2
                    Z=   300.0 in  Iz=         0 sl-ft2  Iyz=        0 sl-ft2
TOTAL SAVED  (Label MIDDECK 3)

+WIRE ASSY, BAY 7         0        0   520.0      .0   300.0       0       0       0
+MLI, BAY 8               0        0   520.0      .0   300.0       0       0       0
+MLI PATCHES, BAY 8       0        0   520.0      .0   300.0       0       0       0
+WIRE, BAY 9              0        0   520.0      .0   300.0       0       0       0
+NOBL VENT PLUG CADDY     0        0   520.0      .0   300.0       0       0       0
+NOBL VENT PLUG CADDY     0        0   520.0      .0   300.0       0       0       0
+MLI RECOVERY BAG, BAY 7  0        2   520.0      .0   300.0       0       0       0

MIDDECK 4
                    X=   520.0 in  Ix=         0 sl-ft2  Ixy=        0 sl-ft2
Wt.=     200 lb     Y=      .0 in  Iy=         0 sl-ft2  Ixz=        0 sl-ft2
                    Z=   300.0 in  Iz=         0 sl-ft2  Iyz=        0 sl-ft2
TOTAL SAVED  (Label MIDDECK 4)

+NOBL VENT PLUG BAY 5     0        1   520.0      .0   300.0       0       0       0
+MLI BAY 5                0        0   520.0      .0   300.0       0       0       0
+NOBL VENT PLUGS CADDY    0        0   520.0      .0   300.0       0       0       0
+MLI RECOVERY BAG 5       0        2   520.0      .0   300.0       0       0       0

MIDDECK 5
                    X=   520.0 in  Ix=        -0 sl-ft2  Ixy=        0 sl-ft2
Wt.=     203 lb     Y=      .0 in  Iy=        -0 sl-ft2  Ixz=       -0 sl-ft2
                    Z=   300.0 in  Iz=        -0 sl-ft2  Iyz=        0 sl-ft2
TOTAL SAVED  (Label MIDDECK 5)


MIDDECK 6
                    X=   520.0 in  Ix=        -0 sl-ft2  Ixy=        0 sl-ft2
Wt.=     203 lb     Y=      .0 in  Iy=        -0 sl-ft2  Ixz=       -0 sl-ft2
                    Z=   300.0 in  Iz=        -0 sl-ft2  Iyz=        0 sl-ft2
TOTAL SAVED  (Label MIDDECK 6)

-BATT CAP CADDY ASSY      0      -24   520.0      .0   300.0       0       0       0

MIDDECK 7
                    X=   520.0 in  Ix=         0 sl-ft2  Ixy=        0 sl-ft2
Wt.=     179 lb     Y=      .0 in  Iy=         0 sl-ft2  Ixz=       -0 sl-ft2
                    Z=   300.0 in  Iz=        -0 sl-ft2  Iyz=        0 sl-ft2
TOTAL SAVED  (Label MIDDECK 7)

+BAY 4 CRYO VENT COVER    0        6   520.0      .0   300.0       0       0       0
+ESM CONNECTOR CAP ASSY   0        4   520.0      .0   300.0       0       0       0
+ASCS SOCK RESTRAINT STR  0        1   520.0      .0   300.0       0       0       0
+CPL EVAP PROTECTIVE COV  0        2   520.0      .0   300.0       0       0       0

MIDDECK 8
                    X=   520.0 in  Ix=        -0 sl-ft2  Ixy=        0 sl-ft2
Wt.=     191 lb     Y=      .0 in  Iy=        -0 sl-ft2  Ixz=       -0 sl-ft2
                    Z=   300.0 in  Iz=        -0 sl-ft2  Iyz=        0 sl-ft2
TOTAL SAVED  (Label MIDDECK 8)
```

```
MIDDECK 9
                   X=   520.0 in  Ix=        -0 sl-ft2  Ixy=        0 sl-ft2
Wt.=     191 lb    Y=      .0 in  Iy=        -0 sl-ft2  Ixz=       -0 sl-ft2
                   Z=   300.0 in  Iz=        -0 sl-ft2  Iyz=        0 sl-ft2
TOTAL SAVED  (Label MIDDECK 9)

-FGS GUIDE STUDS, LOCKIN  0       -1   520.0      .0   300.0       0       0       0
-FGS GUIDE STUDS, NON-LO  0       -1   520.0      .0   300.0       0       0       0

MIDDECK 10
                   X=   520.0 in  Ix=        -0 sl-ft2  Ixy=        0 sl-ft2
Wt.=     189 lb    Y=      .0 in  Iy=        -0 sl-ft2  Ixz=       -0 sl-ft2
                   Z=   300.0 in  Iz=        -0 sl-ft2  Iyz=        0 sl-ft2
TOTAL SAVED  (Label MIDDECK 10)


MIDDECK LANDING
                   X=   520.0 in  Ix=        -0 sl-ft2  Ixy=        0 sl-ft2
Wt.=     189 lb    Y=      .0 in  Iy=        -0 sl-ft2  Ixz=       -0 sl-ft2
                   Z=   300.0 in  Iz=        -0 sl-ft2  Iyz=        0 sl-ft2
TOTAL SAVED  (Label MIDDECK LD)

------ REGISTERS CLEARED
*******************************************************************************
SLIC IN SLIC COORDINATES (INERTIAS ARE LB-IN^2)
WHEN REMOVING HARDWARE, BOTH THE WEIGHT AND INERTIA TERMS SHOULD BE MADE NEGATIVE
SLIC AT LAUNCH            0     6592   -21.6     1.7   -16.4168363301218061017521640
 Delta POI (lb-in2)                                          -81957-1054637   41060

SLIC AT LAUNCH
                   X=   -21.6 in  Ix=      3634 sl-ft2  Ixy=      -18 sl-ft2
Wt.=    6592 lb    Y=     1.7 in  Iy=      2629 sl-ft2  Ixz=     -228 sl-ft2
                   Z=   -16.4 in  Iz=      3782 sl-ft2  Iyz=        9 sl-ft2
TOTAL SAVED  (Label SLIC LH)


SLIC 1
                   X=   -21.6 in  Ix=      3634 sl-ft2  Ixy=      -18 sl-ft2
Wt.=    6592 lb    Y=     1.7 in  Iy=      2629 sl-ft2  Ixz=     -228 sl-ft2
                   Z=   -16.4 in  Iz=      3782 sl-ft2  Iyz=        9 sl-ft2
TOTAL SAVED  (Label SLIC 1)


SLIC 2
                   X=   -21.6 in  Ix=      3634 sl-ft2  Ixy=      -18 sl-ft2
Wt.=    6592 lb    Y=     1.7 in  Iy=      2629 sl-ft2  Ixz=     -228 sl-ft2
                   Z=   -16.4 in  Iz=      3782 sl-ft2  Iyz=        9 sl-ft2
TOTAL SAVED  (Label SLIC 2)


SLIC 3
                   X=   -21.6 in  Ix=      3634 sl-ft2  Ixy=      -18 sl-ft2
Wt.=    6592 lb    Y=     1.7 in  Iy=      2629 sl-ft2  Ixz=     -228 sl-ft2
                   Z=   -16.4 in  Iz=      3782 sl-ft2  Iyz=        9 sl-ft2
TOTAL SAVED  (Label SLIC 3)


SLIC 4
```

```
                    X=   -21.6 in  Ix=      3634 sl-ft2  Ixy=      -18 sl-ft2
Wt.=    6592 lb     Y=     1.7 in  Iy=      2629 sl-ft2  Ixz=     -228 sl-ft2
                    Z=   -16.4 in  Iz=      3782 sl-ft2  Iyz=        9 sl-ft2
TOTAL SAVED  (Label SLIC 4)


SLIC 5
                    X=   -21.6 in  Ix=      3634 sl-ft2  Ixy=      -18 sl-ft2
Wt.=    6592 lb     Y=     1.7 in  Iy=      2629 sl-ft2  Ixz=     -228 sl-ft2
                    Z=   -16.4 in  Iz=      3782 sl-ft2  Iyz=        9 sl-ft2
TOTAL SAVED  (Label SLIC 5)

-WFC3                     0     -964   -32.9      .6    19.5-1744414 -154072  -72243
 Delta POI (lb-in2)                                                 260  -30384       6
+WFPC-II                  0      620   -32.9      .6    19.5  112148   99068   46452
 Delta POI (lb-in2)                                                -167   19537       0

SLIC AFTER WFC3 INSTALLATION
                    X=   -21.0 in  Ix=      3181 sl-ft2  Ixy=      -19 sl-ft2
Wt.=    6248 lb     Y=     1.8 in  Iy=      2506 sl-ft2  Ixz=     -198 sl-ft2
                    Z=   -18.4 in  Iz=      3766 sl-ft2  Iyz=       12 sl-ft2
TOTAL SAVED  (Label SLIC 6)

+BAY 2 BATTERY MODULE     0      464    11.0   -22.9    -9.5   77862   64660  122007
+BAY 3 BATTERY MODULE     0      464    11.0    22.9    -9.5   77862   64660  122007
+BATTERY CAP CADDY ASSY   0       24    11.0      .0    -9.5       0       0       0
-BAY 2 BATTERY MODULE     0     -460    11.0   -22.9    -9.5  -77191  -64103 -120955
-BAY 3 BATTERY MODULE     0     -460    11.0    22.9    -9.5  -77191  -64103 -120955

SLIC AFTER BATTERY MODULE CHANGEOUT
                    X=   -20.8 in  Ix=      3182 sl-ft2  Ixy=      -19 sl-ft2
Wt.=    6280 lb     Y=     1.8 in  Iy=      2514 sl-ft2  Ixz=     -196 sl-ft2
                    Z=   -18.3 in  Iz=      3775 sl-ft2  Iyz=       12 sl-ft2
TOTAL SAVED  (Label SLIC 7)

-ASCS RADIATOR PANEL      0     -428   -83.1     1.0   -33.9 -549198  -33213 -520880
 Delta POI (lb-in2)                                                5117    -197     106
-ASCS RADIATOR SOCK, LAR  0      -12   -85.9      .0   -34.8    -551     -60    -551
-ASCS RADIATOR SOCK, SMA  0      -12   -89.9    32.8   -34.3     -21    -141    -141
-ASCS SOCK RESTRAINT STR  0       -1   -88.7      .0   -35.0      -0      -1      -1
-CPL EVAP BRKT, STIS      0       -2   -84.0      .0   -32.1     -35      -1     -34

SLIC AFTER ASCS RADIATOR INSTALL
                    X=   -15.9 in  Ix=      3035 sl-ft2  Ixy=      -17 sl-ft2
Wt.=    5825 lb     Y=     1.7 in  Iy=      2067 sl-ft2  Ixz=     -299 sl-ft2
                    Z=   -17.1 in  Iz=      3246 sl-ft2  Iyz=       12 sl-ft2
TOTAL SAVED  (Label SLIC 8)


SLIC 9
                    X=   -15.9 in  Ix=      3035 sl-ft2  Ixy=      -17 sl-ft2
Wt.=    5825 lb     Y=     1.7 in  Iy=      2067 sl-ft2  Ixz=     -299 sl-ft2
                    Z=   -17.1 in  Iz=      3246 sl-ft2  Iyz=       12 sl-ft2
TOTAL SAVED  (Label SLIC 9)


SLIC 10
                    X=   -15.9 in  Ix=      3035 sl-ft2  Ixy=      -17 sl-ft2
Wt.=    5825 lb     Y=     1.7 in  Iy=      2067 sl-ft2  Ixz=     -299 sl-ft2
                    Z=   -17.1 in  Iz=      3246 sl-ft2  Iyz=       12 sl-ft2
```

```
TOTAL SAVED  (Label SLIC 10)


SLIC LANDING
                   X=   -15.9 in  Ix=      3035 sl-ft2  Ixy=      -17 sl-ft2
Wt.=    5825 lb    Y=     1.7 in  Iy=      2067 sl-ft2  Ixz=     -299 sl-ft2
                   Z=   -17.1 in  Iz=      3246 sl-ft2  Iyz=       12 sl-ft2
TOTAL SAVED  (Label SLIC LD)

------ REGISTERS CLEARED
*******************************************************************************
ORUC IN ORUC COORDINATES (INERTIAS ARE LB-IN^2)
WHEN REMOVING HARDWARE, BOTH THE WEIGHT AND INERTIA TERMS SHOULD BE MADE NEGATIVE
ORUC AT LAUNCH            0     7362   -26.2     2.1   -25.4201486501709038023914330
 Delta POI (lb-in2)                                          339576 -922043 1069697

ORUC AT LAUNCH
                   X=   -26.2 in  Ix=      4349 sl-ft2  Ixy=       73 sl-ft2
Wt.=    7362 lb    Y=     2.1 in  Iy=      3689 sl-ft2  Ixz=     -199 sl-ft2
                   Z=   -25.4 in  Iz=      5162 sl-ft2  Iyz=      231 sl-ft2
TOTAL SAVED  (Label ORUC LH)

-RSU1R                    0      -24     7.5    71.1    18.3    -254    -344    -496
+RSU1                     0       24     7.5    71.1    18.3     254     344     496
-RSU2R1                   0      -24   -11.0    56.3    18.3    -254    -344    -496
+RSU2R                    0       24   -11.0    56.3    18.3     254     344     496
-RSU3R1                   0      -24   -32.5    66.8    18.3    -344    -254    -496
+RSU3R                    0       24   -32.5    66.8    18.3     344     254     496
-RSU CONN CAP             0       -1     7.5    71.1    18.3       0       0       0
-RSU CONN CAP             0       -1   -11.0    56.3    18.3       0       0       0
-RSU CONN CAP             0       -1   -32.5    66.8    18.3       0       0       0

ORUC AFTER RSU (QTY 3) INSTALL
                   X=   -26.2 in  Ix=      4348 sl-ft2  Ixy=       73 sl-ft2
Wt.=    7361 lb    Y=     2.1 in  Iy=      3688 sl-ft2  Ixz=     -199 sl-ft2
                   Z=   -25.4 in  Iz=      5161 sl-ft2  Iyz=      231 sl-ft2
TOTAL SAVED  (Label ORUC 1)

-DSC                      0      -17   -12.3    67.5    19.8    -351    -687    -761
-DSC HMD                  0       -3   -12.3    67.5    19.8     -57    -109    -120

ORUC AFTER DSC INSTALL
                   X=   -26.2 in  Ix=      4322 sl-ft2  Ixy=       69 sl-ft2
Wt.=    7342 lb    Y=     1.9 in  Iy=      3679 sl-ft2  Ixz=     -202 sl-ft2
                   Z=   -25.5 in  Iz=      5143 sl-ft2  Iyz=      218 sl-ft2
TOTAL SAVED  (Label ORUC 2)

-COS                      0     -907    -4.5      .0   -17.5 -184056 -660649 -660649
+COSTAR                   0      659    -4.5      .0   -17.5  135936  487925  487925
-COS THERMAL JOINT COVER  0       -6    33.5   -60.8   -60.5     -21     -21     -21

ORUC AFTER COS INSTALL
                   X=   -27.0 in  Ix=      4301 sl-ft2  Ixy=       77 sl-ft2
Wt.=    7089 lb    Y=     2.0 in  Iy=      3606 sl-ft2  Ixz=     -209 sl-ft2
                   Z=   -25.8 in  Iz=      5069 sl-ft2  Iyz=      216 sl-ft2
TOTAL SAVED  (Label ORUC 3)

-NOBL 7                   0       -9   -34.4   -63.6   -16.9       0       0       0
-NOBL 8                   0       -9   -34.4   -63.6   -16.9       0       0       0
-NOBL VENT PLUG CADDY     0       -0   -34.4   -63.6   -16.9       0       0       0
```

```
-NOBL VENT PLUG CADDY     0       -0   -34.4   -63.6   -16.9       0       0       0
-MLI RECOVERY BAG, BAY 7  0       -2   -30.5     5.5     9.1       0       0       0

ORUC AFTER NOBL INSTALL
                   X=   -27.0 in  Ix=      4284 sl-ft2  Ixy=       75 sl-ft2
Wt.=    7070 lb    Y=     2.2 in  Iy=      3605 sl-ft2  Ixz=     -208 sl-ft2
                   Z=   -25.8 in  Iz=      5053 sl-ft2  Iyz=      219 sl-ft2
TOTAL SAVED  (Label ORUC 4)

-MLI RECOVERY BAG 5       0       -2   -20.5    -4.5     9.1     -13     -13     -27
-NOBL 5                   0       -9   -34.4   -63.6   -16.9       0       0       0
-NOBL VENT PLUGS CADDY    0       -0   -34.4   -63.6   -16.9       0       0       0

ORUC AFTER NOBL 5 INSTALL
                   X=   -27.0 in  Ix=      4275 sl-ft2  Ixy=       74 sl-ft2
Wt.=    7059 lb    Y=     2.3 in  Iy=      3604 sl-ft2  Ixz=     -208 sl-ft2
                   Z=   -25.8 in  Iz=      5044 sl-ft2  Iyz=      220 sl-ft2
TOTAL SAVED  (Label ORUC 5)


ORUC 6
                   X=   -27.0 in  Ix=      4275 sl-ft2  Ixy=       74 sl-ft2
Wt.=    7059 lb    Y=     2.3 in  Iy=      3604 sl-ft2  Ixz=     -208 sl-ft2
                   Z=   -25.8 in  Iz=      5044 sl-ft2  Iyz=      220 sl-ft2
TOTAL SAVED  (Label ORUC 6)


ORUC 7
                   X=   -27.0 in  Ix=      4275 sl-ft2  Ixy=       74 sl-ft2
Wt.=    7059 lb    Y=     2.3 in  Iy=      3604 sl-ft2  Ixz=     -208 sl-ft2
                   Z=   -25.8 in  Iz=      5044 sl-ft2  Iyz=      220 sl-ft2
TOTAL SAVED  (Label ORUC 7)

-ASCS CRYO VENT INSERT    0       -3    32.0    49.4   -56.7     -28     -32     -32
-DSES                     0       -2    39.0   -58.1   -62.7       0       0       0
+ASCS RADIATOR SOCK, LAR  0       12    32.0    49.4   -56.7       0       0       0
+ASCS RADIATOR SOCK, SMA  0       12    32.0    49.4   -56.7       0       0       0

ORUC AFTER ASCS INSTALL
                   X=   -26.9 in  Ix=      4287 sl-ft2  Ixy=       87 sl-ft2
Wt.=    7078 lb    Y=     2.4 in  Iy=      3622 sl-ft2  Ixz=     -215 sl-ft2
                   Z=   -25.9 in  Iz=      5066 sl-ft2  Iyz=      213 sl-ft2
TOTAL SAVED  (Label ORUC 8)


ORUC 9
                   X=   -26.9 in  Ix=      4287 sl-ft2  Ixy=       87 sl-ft2
Wt.=    7078 lb    Y=     2.4 in  Iy=      3622 sl-ft2  Ixz=     -215 sl-ft2
                   Z=   -25.9 in  Iz=      5066 sl-ft2  Iyz=      213 sl-ft2
TOTAL SAVED  (Label ORUC 9)

-FGS3R                    0     -467   -71.0     -.5    -5.9 -183763 -135185  -92957
+FGS3                     0      478   -71.0     -.5    -5.9  190807  140367   96520
+FGS GUIDE STUDS, LOCKIN  0        1   -71.0     -.5    -5.9       0       0       0
+FGS GUIDE STUDS, NON-LO  0        1   -71.0     -.5    -5.9       0       0       0

ORUC AFTER FGS3R INSTALL
                   X=   -26.9 in  Ix=      4290 sl-ft2  Ixy=       88 sl-ft2
Wt.=    7090 lb    Y=     2.4 in  Iy=      3629 sl-ft2  Ixz=     -218 sl-ft2
                   Z=   -25.9 in  Iz=      5072 sl-ft2  Iyz=      213 sl-ft2
```

```
TOTAL SAVED  (Label ORUC 10)


ORUC LANDING
                   X=   -26.9 in  Ix=      4290 sl-ft2  Ixy=       88 sl-ft2
Wt.=    7090 lb    Y=     2.4 in  Iy=      3629 sl-ft2  Ixz=     -218 sl-ft2
                   Z=   -25.9 in  Iz=      5072 sl-ft2  Iyz=      213 sl-ft2
TOTAL SAVED  (Label ORUC LD)

------ REGISTERS CLEARED
*******************************************************************************
FSS IN FSS COORDINATES (INERTIAS ARE LB-IN^2)
WHEN REMOVING HARDWARE, BOTH THE WEIGHT AND INERTIA TERMS SHOULD BE MADE NEGATIVE
FSS                      0     4800   100.2    -1.3   100.420362120 883696011961660
 Delta POI (lb-in2)                                          268895  162728  613720

FSS AT LAUNCH
                   X=   100.2 in  Ix=      4395 sl-ft2  Ixy=       58 sl-ft2
Wt.=    4800 lb    Y=    -1.3 in  Iy=      1907 sl-ft2  Ixz=       35 sl-ft2
                   Z=   100.4 in  Iz=      2582 sl-ft2  Iyz=      132 sl-ft2
TOTAL SAVED  (Label FSS LH)

-BAPS VERTICAL           0     -782   101.0     -.5   146.6-1087378 -714881 -574499
 Delta POI (lb-in2)                                         -14362 -115826   29188
+BAPS HORIZONTAL         0      782    73.6     -.5   175.9  574499  714881 1087378
 Delta POI (lb-in2)                                         -29188 -115826  -14362

FSS AFTER BAPS ROTATE
                   X=    95.7 in  Ix=      4863 sl-ft2  Ixy=       45 sl-ft2
Wt.=    4800 lb    Y=    -1.3 in  Iy=      2585 sl-ft2  Ixz=     -339 sl-ft2
                   Z=   105.2 in  Iz=      2792 sl-ft2  Iyz=      140 sl-ft2
TOTAL SAVED  (Label FSS 1)


FSS 2
                   X=    95.7 in  Ix=      4863 sl-ft2  Ixy=       45 sl-ft2
Wt.=    4800 lb    Y=    -1.3 in  Iy=      2585 sl-ft2  Ixz=     -339 sl-ft2
                   Z=   105.2 in  Iz=      2792 sl-ft2  Iyz=      140 sl-ft2
TOTAL SAVED  (Label FSS 2)


FSS 3
                   X=    95.7 in  Ix=      4863 sl-ft2  Ixy=       45 sl-ft2
Wt.=    4800 lb    Y=    -1.3 in  Iy=      2585 sl-ft2  Ixz=     -339 sl-ft2
                   Z=   105.2 in  Iz=      2792 sl-ft2  Iyz=      140 sl-ft2
TOTAL SAVED  (Label FSS 3)


FSS 4
                   X=    95.7 in  Ix=      4863 sl-ft2  Ixy=       45 sl-ft2
Wt.=    4800 lb    Y=    -1.3 in  Iy=      2585 sl-ft2  Ixz=     -339 sl-ft2
                   Z=   105.2 in  Iz=      2792 sl-ft2  Iyz=      140 sl-ft2
TOTAL SAVED  (Label FSS 4)


FSS 5
                   X=    95.7 in  Ix=      4863 sl-ft2  Ixy=       45 sl-ft2
Wt.=    4800 lb    Y=    -1.3 in  Iy=      2585 sl-ft2  Ixz=     -339 sl-ft2
                   Z=   105.2 in  Iz=      2792 sl-ft2  Iyz=      140 sl-ft2
TOTAL SAVED  (Label FSS 5)
```

```
FSS 6
                    X=    95.7 in  Ix=      4863 sl-ft2  Ixy=       45 sl-ft2
Wt.=    4800 lb     Y=    -1.3 in  Iy=      2585 sl-ft2  Ixz=     -339 sl-ft2
                    Z=   105.2 in  Iz=      2792 sl-ft2  Iyz=      140 sl-ft2
TOTAL SAVED  (Label FSS 6)


FSS 7
                    X=    95.7 in  Ix=      4863 sl-ft2  Ixy=       45 sl-ft2
Wt.=    4800 lb     Y=    -1.3 in  Iy=      2585 sl-ft2  Ixz=     -339 sl-ft2
                    Z=   105.2 in  Iz=      2792 sl-ft2  Iyz=      140 sl-ft2
TOTAL SAVED  (Label FSS 7)


FSS 8
                    X=    95.7 in  Ix=      4863 sl-ft2  Ixy=       45 sl-ft2
Wt.=    4800 lb     Y=    -1.3 in  Iy=      2585 sl-ft2  Ixz=     -339 sl-ft2
                    Z=   105.2 in  Iz=      2792 sl-ft2  Iyz=      140 sl-ft2
TOTAL SAVED  (Label FSS 8)

-STIK                     0      -60    89.1   -65.9    70.8   -6636   -6248    -588
 Delta POI (lb-in2)                                                 18    -152    -624

FSS AFTER STIK INSTALLATION
                    X=    95.8 in  Ix=      4791 sl-ft2  Ixy=       39 sl-ft2
Wt.=    4740 lb     Y=     -.5 in  Iy=      2568 sl-ft2  Ixz=     -342 sl-ft2
                    Z=   105.6 in  Iz=      2736 sl-ft2  Iyz=      110 sl-ft2
TOTAL SAVED  (Label FSS 9)


FSS 10
                    X=    95.8 in  Ix=      4791 sl-ft2  Ixy=       39 sl-ft2
Wt.=    4740 lb     Y=     -.5 in  Iy=      2568 sl-ft2  Ixz=     -342 sl-ft2
                    Z=   105.6 in  Iz=      2736 sl-ft2  Iyz=      110 sl-ft2
TOTAL SAVED  (Label FSS 10)

-BAPS HORIZONTAL          0     -782    73.6     -.5   175.9 -574499 -714881-1087378
 Delta POI (lb-in2)                                            29188  115826   14362
+PIVOT COMP               0      782    83.7     -.5   155.9     150      97     151
 Delta POI (lb-in2)                                               -2      42      -6

FSS LANDING
                    X=    97.5 in  Ix=      4249 sl-ft2  Ixy=       46 sl-ft2
Wt.=    4740 lb     Y=     -.5 in  Iy=      1934 sl-ft2  Ixz=     -150 sl-ft2
                    Z=   102.3 in  Iz=      2440 sl-ft2  Iyz=      113 sl-ft2
TOTAL SAVED  (Label FSS LD)

------ REGISTERS CLEARED

 GSE

OUTRIGGER ASSY STBD       0      105    80.0    77.5   110.0       0       0       0
OUTRIGGER ASSY PORT       0      105    80.0   -77.5   110.0       0       0       0
SIP SUPPORT STBD          0       12   120.0    82.5   115.0       0       0       0
SIP SUPPORT PORT          0       12   120.0   -82.5   115.0       0       0       0

GSE
                    X=    84.1 in  Ix=       308 sl-ft2  Ixy=        0 sl-ft2
```

```
Wt.=     234 lb    Y=      .0 in  Iy=         8 sl-ft2  Ixz=        1 sl-ft2
                   Z=   110.5 in  Iz=       315 sl-ft2  Iyz=        0 sl-ft2
TOTAL SAVED  (Label GSE)

------ REGISTERS CLEARED
                          %       lb    -------- in --------    ------ sl-ft2 ------

{FSS LH}FSS AT LAUNCH     0     4800   100.2    -1.3   100.4    4395    1907    2582
 Delta POI (sl-ft2)                                                 58      35     132
{GSE}GSE                  0      234    84.1      .0   110.5     308       8     315
 Delta POI (sl-ft2)                                                  0       1       0

FSS WITH GSE
                   X=    99.5 in  Ix=      4708 sl-ft2  Ixy=       57 sl-ft2
Wt.=    5034 lb    Y=    -1.2 in  Iy=      1932 sl-ft2  Ixz=       28 sl-ft2
                   Z=   100.9 in  Iz=      2909 sl-ft2  Iyz=      133 sl-ft2
TOTAL SAVED  (Label FSS GSE)

------ REGISTERS CLEARED
TRANSLATE ALL CARRIER TOTALS TO ORBITER COORDINATES

{SLIC LH}SLIC AT LAUNCH   0     6592   -21.6     1.7   -16.4    3634    2629    3782
 Delta POI (sl-ft2)                                                -18    -228       9
Mass Properties Translated by  833  0  414

SLIC LH
                   X=   811.4 in  Ix=      3634 sl-ft2  Ixy=      -18 sl-ft2
Wt.=    6592 lb    Y=     1.7 in  Iy=      2629 sl-ft2  Ixz=     -228 sl-ft2
                   Z=   397.6 in  Iz=      3782 sl-ft2  Iyz=        9 sl-ft2
TOTAL SAVED  (Label SLIC LH)

------ REGISTERS CLEARED
{ORUC LH}ORUC AT LAUNCH   0     7362   -26.2     2.1   -25.4    4349    3689    5162
 Delta POI (sl-ft2)                                                 73    -199     231
Mass Properties Translated by  998.2  0  414

ORUC LH
                   X=   972.0 in  Ix=      4349 sl-ft2  Ixy=       73 sl-ft2
Wt.=    7362 lb    Y=     2.1 in  Iy=      3689 sl-ft2  Ixz=     -199 sl-ft2
                   Z=   388.6 in  Iz=      5162 sl-ft2  Iyz=      231 sl-ft2
TOTAL SAVED  (Label ORUC LH)

------ REGISTERS CLEARED
{FSS GSE}FSS WITH GSE     0     5034    99.5    -1.2   100.9    4708    1932    2909
 Delta POI (sl-ft2)                                                 57      28     133
Mass Properties Translated by  1075.2  0  300

FSS GSE
                   X=  1174.7 in  Ix=      4708 sl-ft2  Ixy=       57 sl-ft2
Wt.=    5034 lb    Y=    -1.2 in  Iy=      1932 sl-ft2  Ixz=       28 sl-ft2
                   Z=   400.9 in  Iz=      2909 sl-ft2  Iyz=      133 sl-ft2
TOTAL SAVED  (Label FSS GSE)

------ REGISTERS CLEARED
{FSS LH}FSS AT LAUNCH     0     4800   100.2    -1.3   100.4    4395    1907    2582
 Delta POI (sl-ft2)                                                 58      35     132
Mass Properties Translated by  1075.2  0  300

FSS LH
                   X=  1175.4 in  Ix=      4395 sl-ft2  Ixy=       58 sl-ft2
```

```
Wt.=    4800 lb    Y=    -1.3 in  Iy=      1907 sl-ft2  Ixz=       35 sl-ft2
                   Z=   400.4 in  Iz=      2582 sl-ft2  Iyz=      132 sl-ft2
TOTAL SAVED  (Label FSS LH)

------ REGISTERS CLEARED
{SLIC 1}SLIC 1            0     6592   -21.6     1.7   -16.4    3634    2629    3782
 Delta POI (sl-ft2)                                                -18    -228       9
Mass Properties Translated by  833  0  414

SLIC 1
                   X=   811.4 in  Ix=      3634 sl-ft2  Ixy=      -18 sl-ft2
Wt.=    6592 lb    Y=     1.7 in  Iy=      2629 sl-ft2  Ixz=     -228 sl-ft2
                   Z=   397.6 in  Iz=      3782 sl-ft2  Iyz=        9 sl-ft2
TOTAL SAVED  (Label SLIC 1)

------ REGISTERS CLEARED
{ORUC 1}ORUC AFTER RSU (  0     7362   -26.2     2.1   -25.4    4348    3688    5161
 Delta POI (sl-ft2)                                                 73    -199     231
Mass Properties Translated by  998.2  0  414

ORUC 1
                   X=   972.0 in  Ix=      4348 sl-ft2  Ixy=       73 sl-ft2
Wt.=    7362 lb    Y=     2.1 in  Iy=      3688 sl-ft2  Ixz=     -199 sl-ft2
                   Z=   388.6 in  Iz=      5161 sl-ft2  Iyz=      231 sl-ft2
TOTAL SAVED  (Label ORUC 1)

------ REGISTERS CLEARED
{FSS 1}FSS AFTER BAPS RO  0     4800    95.7    -1.3   105.2    4863    2585    2792
 Delta POI (sl-ft2)                                                 45    -339     140
Mass Properties Translated by  1075.2  0  300

FSS 1
                   X=  1170.9 in  Ix=      4863 sl-ft2  Ixy=       45 sl-ft2
Wt.=    4800 lb    Y=    -1.3 in  Iy=      2585 sl-ft2  Ixz=     -339 sl-ft2
                   Z=   405.2 in  Iz=      2792 sl-ft2  Iyz=      140 sl-ft2
TOTAL SAVED  (Label FSS 1)

------ REGISTERS CLEARED
{SLIC 2}SLIC 2            0     6592   -21.6     1.7   -16.4    3634    2629    3782
 Delta POI (sl-ft2)                                                -18    -228       9
Mass Properties Translated by  833  0  414

SLIC 2
                   X=   811.4 in  Ix=      3634 sl-ft2  Ixy=      -18 sl-ft2
Wt.=    6592 lb    Y=     1.7 in  Iy=      2629 sl-ft2  Ixz=     -228 sl-ft2
                   Z=   397.6 in  Iz=      3782 sl-ft2  Iyz=        9 sl-ft2
TOTAL SAVED  (Label SLIC 2)

------ REGISTERS CLEARED
{ORUC 2}ORUC AFTER DSC I  0     7343   -26.2     1.9   -25.5    4322    3679    5143
 Delta POI (sl-ft2)                                                 69    -202     218
Mass Properties Translated by  998.2  0  414

ORUC 2
                   X=   972.0 in  Ix=      4322 sl-ft2  Ixy=       69 sl-ft2
Wt.=    7343 lb    Y=     1.9 in  Iy=      3679 sl-ft2  Ixz=     -202 sl-ft2
                   Z=   388.5 in  Iz=      5142 sl-ft2  Iyz=      218 sl-ft2
TOTAL SAVED  (Label ORUC 2)

------ REGISTERS CLEARED
```

```
{FSS 2}FSS 2              0     4800    95.7    -1.3   105.2    4863    2585    2792
 Delta POI (sl-ft2)                                                 45    -339     140
Mass Properties Translated by  1075.2  0  300

FSS 2
                  X=  1170.9 in  Ix=      4863 sl-ft2  Ixy=       45 sl-ft2
Wt.=    4800 lb   Y=    -1.3 in  Iy=      2585 sl-ft2  Ixz=     -339 sl-ft2
                  Z=   405.2 in  Iz=      2792 sl-ft2  Iyz=      140 sl-ft2
TOTAL SAVED  (Label FSS 2)

------ REGISTERS CLEARED
{SLIC 3}SLIC 3            0     6592   -21.6     1.7   -16.4    3634    2629    3782
 Delta POI (sl-ft2)                                                -18    -228       9
Mass Properties Translated by  833  0  414

SLIC 3
                  X=   811.4 in  Ix=      3634 sl-ft2  Ixy=      -18 sl-ft2
Wt.=    6592 lb   Y=     1.7 in  Iy=      2629 sl-ft2  Ixz=     -228 sl-ft2
                  Z=   397.6 in  Iz=      3782 sl-ft2  Iyz=        9 sl-ft2
TOTAL SAVED  (Label SLIC 3)

------ REGISTERS CLEARED
{ORUC 3}ORUC AFTER COS I  0     7089   -27.0     2.0   -25.8    4301    3606    5069
 Delta POI (sl-ft2)                                                 77    -209     216
Mass Properties Translated by  998.2  0  414

ORUC 3
                  X=   971.2 in  Ix=      4301 sl-ft2  Ixy=       77 sl-ft2
Wt.=    7089 lb   Y=     2.0 in  Iy=      3606 sl-ft2  Ixz=     -209 sl-ft2
                  Z=   388.2 in  Iz=      5069 sl-ft2  Iyz=      216 sl-ft2
TOTAL SAVED  (Label ORUC 3)

------ REGISTERS CLEARED
{FSS 3}FSS 3              0     4800    95.7    -1.3   105.2    4863    2585    2792
 Delta POI (sl-ft2)                                                 45    -339     140
Mass Properties Translated by  1075.2  0  300

FSS 3
                  X=  1170.9 in  Ix=      4863 sl-ft2  Ixy=       45 sl-ft2
Wt.=    4800 lb   Y=    -1.3 in  Iy=      2585 sl-ft2  Ixz=     -339 sl-ft2
                  Z=   405.2 in  Iz=      2792 sl-ft2  Iyz=      140 sl-ft2
TOTAL SAVED  (Label FSS 3)

------ REGISTERS CLEARED
{SLIC 4}SLIC 4            0     6592   -21.6     1.7   -16.4    3634    2629    3782
 Delta POI (sl-ft2)                                                -18    -228       9
Mass Properties Translated by  833  0  414

SLIC 4
                  X=   811.4 in  Ix=      3634 sl-ft2  Ixy=      -18 sl-ft2
Wt.=    6592 lb   Y=     1.7 in  Iy=      2629 sl-ft2  Ixz=     -228 sl-ft2
                  Z=   397.6 in  Iz=      3782 sl-ft2  Iyz=        9 sl-ft2
TOTAL SAVED  (Label SLIC 4)

------ REGISTERS CLEARED
{ORUC 4}ORUC AFTER NOBL   0     7070   -27.0     2.2   -25.8    4284    3605    5053
 Delta POI (sl-ft2)                                                 75    -208     219
Mass Properties Translated by  998.2  0  414

ORUC 4
```

```
                    X=   971.2 in  Ix=      4284 sl-ft2  Ixy=       75 sl-ft2
Wt.=    7070 lb     Y=     2.2 in  Iy=      3605 sl-ft2  Ixz=     -208 sl-ft2
                    Z=   388.2 in  Iz=      5053 sl-ft2  Iyz=      219 sl-ft2
TOTAL SAVED  (Label ORUC 4)

------ REGISTERS CLEARED
{FSS 4}FSS 4              0     4800    95.7    -1.3   105.2    4863    2585    2792
 Delta POI (sl-ft2)                                                 45    -339     140
Mass Properties Translated by  1075.2  0  300

FSS 4
                    X=  1170.9 in  Ix=      4863 sl-ft2  Ixy=       45 sl-ft2
Wt.=    4800 lb     Y=    -1.3 in  Iy=      2585 sl-ft2  Ixz=     -339 sl-ft2
                    Z=   405.2 in  Iz=      2792 sl-ft2  Iyz=      140 sl-ft2
TOTAL SAVED  (Label FSS 4)

------ REGISTERS CLEARED
{SLIC 5}SLIC 5            0     6592   -21.6     1.7   -16.4    3634    2629    3782
 Delta POI (sl-ft2)                                                -18    -228       9
Mass Properties Translated by  833  0  414

SLIC 5
                    X=   811.4 in  Ix=      3634 sl-ft2  Ixy=      -18 sl-ft2
Wt.=    6592 lb     Y=     1.7 in  Iy=      2629 sl-ft2  Ixz=     -228 sl-ft2
                    Z=   397.6 in  Iz=      3782 sl-ft2  Iyz=        9 sl-ft2
TOTAL SAVED  (Label SLIC 5)

------ REGISTERS CLEARED
{ORUC 5}ORUC AFTER NOBL   0     7059   -27.0     2.3   -25.8    4275    3604    5044
 Delta POI (sl-ft2)                                                 74    -208     220
Mass Properties Translated by  998.2  0  414

ORUC 5
                    X=   971.2 in  Ix=      4275 sl-ft2  Ixy=       74 sl-ft2
Wt.=    7059 lb     Y=     2.3 in  Iy=      3605 sl-ft2  Ixz=     -208 sl-ft2
                    Z=   388.2 in  Iz=      5044 sl-ft2  Iyz=      220 sl-ft2
TOTAL SAVED  (Label ORUC 5)

------ REGISTERS CLEARED
{FSS 5}FSS 5              0     4800    95.7    -1.3   105.2    4863    2585    2792
 Delta POI (sl-ft2)                                                 45    -339     140
Mass Properties Translated by  1075.2  0  300

FSS 5
                    X=  1170.9 in  Ix=      4863 sl-ft2  Ixy=       45 sl-ft2
Wt.=    4800 lb     Y=    -1.3 in  Iy=      2585 sl-ft2  Ixz=     -339 sl-ft2
                    Z=   405.2 in  Iz=      2792 sl-ft2  Iyz=      140 sl-ft2
TOTAL SAVED  (Label FSS 5)

------ REGISTERS CLEARED
{SLIC 6}SLIC AFTER WFC3   0     6248   -21.0     1.8   -18.4    3181    2506    3766
 Delta POI (sl-ft2)                                                -19    -198      12
Mass Properties Translated by  833  0  414

SLIC 6
                    X=   812.0 in  Ix=      3181 sl-ft2  Ixy=      -19 sl-ft2
Wt.=    6248 lb     Y=     1.8 in  Iy=      2506 sl-ft2  Ixz=     -198 sl-ft2
                    Z=   395.6 in  Iz=      3766 sl-ft2  Iyz=       12 sl-ft2
TOTAL SAVED  (Label SLIC 6)
```

```
------ REGISTERS CLEARED
{ORUC 6}ORUC 6            0     7059   -27.0     2.3   -25.8    4275    3604    5044
 Delta POI (sl-ft2)                                                 74    -208     220
Mass Properties Translated by  998.2  0  414

ORUC 6
                   X=   971.2 in  Ix=      4275 sl-ft2  Ixy=       74 sl-ft2
Wt.=    7059 lb    Y=     2.3 in  Iy=      3605 sl-ft2  Ixz=     -208 sl-ft2
                   Z=   388.2 in  Iz=      5044 sl-ft2  Iyz=      220 sl-ft2
TOTAL SAVED  (Label ORUC 6)

------ REGISTERS CLEARED
{FSS 6}FSS 6              0     4800    95.7    -1.3   105.2    4863    2585    2792
 Delta POI (sl-ft2)                                                 45    -339     140
Mass Properties Translated by  1075.2  0  300

FSS 6
                   X=  1170.9 in  Ix=      4863 sl-ft2  Ixy=       45 sl-ft2
Wt.=    4800 lb    Y=    -1.3 in  Iy=      2585 sl-ft2  Ixz=     -339 sl-ft2
                   Z=   405.2 in  Iz=      2792 sl-ft2  Iyz=      140 sl-ft2
TOTAL SAVED  (Label FSS 6)

------ REGISTERS CLEARED
{SLIC 7}SLIC AFTER BATTE  0     6280   -20.8     1.8   -18.3    3182    2514    3775
 Delta POI (sl-ft2)                                                -19    -196      12
Mass Properties Translated by  833  0  414

SLIC 7
                   X=   812.2 in  Ix=      3182 sl-ft2  Ixy=      -19 sl-ft2
Wt.=    6280 lb    Y=     1.8 in  Iy=      2514 sl-ft2  Ixz=     -196 sl-ft2
                   Z=   395.7 in  Iz=      3774 sl-ft2  Iyz=       12 sl-ft2
TOTAL SAVED  (Label SLIC 7)

------ REGISTERS CLEARED
{ORUC 7}ORUC 7            0     7059   -27.0     2.3   -25.8    4275    3604    5044
 Delta POI (sl-ft2)                                                 74    -208     220
Mass Properties Translated by  998.2  0  414

ORUC 7
                   X=   971.2 in  Ix=      4275 sl-ft2  Ixy=       74 sl-ft2
Wt.=    7059 lb    Y=     2.3 in  Iy=      3605 sl-ft2  Ixz=     -208 sl-ft2
                   Z=   388.2 in  Iz=      5044 sl-ft2  Iyz=      220 sl-ft2
TOTAL SAVED  (Label ORUC 7)

------ REGISTERS CLEARED
{FSS 7}FSS 7              0     4800    95.7    -1.3   105.2    4863    2585    2792
 Delta POI (sl-ft2)                                                 45    -339     140
Mass Properties Translated by  1075.2  0  300

FSS 7
                   X=  1170.9 in  Ix=      4863 sl-ft2  Ixy=       45 sl-ft2
Wt.=    4800 lb    Y=    -1.3 in  Iy=      2585 sl-ft2  Ixz=     -339 sl-ft2
                   Z=   405.2 in  Iz=      2792 sl-ft2  Iyz=      140 sl-ft2
TOTAL SAVED  (Label FSS 7)

------ REGISTERS CLEARED
{SLIC 8}SLIC AFTER ASCS   0     5825   -15.9     1.7   -17.1    3035    2067    3246
 Delta POI (sl-ft2)                                                -17    -299      12
Mass Properties Translated by  833  0  414
```

```
SLIC 8
                   X=   817.1 in  Ix=      3035 sl-ft2  Ixy=      -17 sl-ft2
Wt.=    5825 lb    Y=     1.7 in  Iy=      2067 sl-ft2  Ixz=     -299 sl-ft2
                   Z=   396.9 in  Iz=      3246 sl-ft2  Iyz=       12 sl-ft2
TOTAL SAVED  (Label SLIC 8)

------ REGISTERS CLEARED
{ORUC 8}ORUC AFTER ASCS   0     7078   -26.9     2.4   -25.9    4287    3622    5066
 Delta POI (sl-ft2)                                                 87    -215     213
Mass Properties Translated by  998.2  0  414

ORUC 8
                   X=   971.3 in  Ix=      4287 sl-ft2  Ixy=       87 sl-ft2
Wt.=    7078 lb    Y=     2.4 in  Iy=      3622 sl-ft2  Ixz=     -215 sl-ft2
                   Z=   388.1 in  Iz=      5066 sl-ft2  Iyz=      213 sl-ft2
TOTAL SAVED  (Label ORUC 8)

------ REGISTERS CLEARED
{FSS 8}FSS 8              0     4800    95.7    -1.3   105.2    4863    2585    2792
 Delta POI (sl-ft2)                                                 45    -339     140
Mass Properties Translated by  1075.2  0  300

FSS 8
                   X=  1170.9 in  Ix=      4863 sl-ft2  Ixy=       45 sl-ft2
Wt.=    4800 lb    Y=    -1.3 in  Iy=      2585 sl-ft2  Ixz=     -339 sl-ft2
                   Z=   405.2 in  Iz=      2792 sl-ft2  Iyz=      140 sl-ft2
TOTAL SAVED  (Label FSS 8)

------ REGISTERS CLEARED
{SLIC 9}SLIC 9            0     5825   -15.9     1.7   -17.1    3035    2067    3246
 Delta POI (sl-ft2)                                                -17    -299      12
Mass Properties Translated by  833  0  414

SLIC 9
                   X=   817.1 in  Ix=      3035 sl-ft2  Ixy=      -17 sl-ft2
Wt.=    5825 lb    Y=     1.7 in  Iy=      2067 sl-ft2  Ixz=     -299 sl-ft2
                   Z=   396.9 in  Iz=      3246 sl-ft2  Iyz=       12 sl-ft2
TOTAL SAVED  (Label SLIC 9)

------ REGISTERS CLEARED
{ORUC 9}ORUC 9            0     7078   -26.9     2.4   -25.9    4287    3622    5066
 Delta POI (sl-ft2)                                                 87    -215     213
Mass Properties Translated by  998.2  0  414

ORUC 9
                   X=   971.3 in  Ix=      4287 sl-ft2  Ixy=       87 sl-ft2
Wt.=    7078 lb    Y=     2.4 in  Iy=      3622 sl-ft2  Ixz=     -215 sl-ft2
                   Z=   388.1 in  Iz=      5066 sl-ft2  Iyz=      213 sl-ft2
TOTAL SAVED  (Label ORUC 9)

------ REGISTERS CLEARED
{FSS 9}FSS AFTER STIK IN  0     4740    95.8     -.5   105.6    4791    2568    2736
 Delta POI (sl-ft2)                                                 39    -342     110
Mass Properties Translated by  1075.2  0  300

FSS 9
                   X=  1171.0 in  Ix=      4791 sl-ft2  Ixy=       39 sl-ft2
Wt.=    4740 lb    Y=     -.5 in  Iy=      2568 sl-ft2  Ixz=     -342 sl-ft2
                   Z=   405.6 in  Iz=      2736 sl-ft2  Iyz=      110 sl-ft2
TOTAL SAVED  (Label FSS 9)
```

```
------ REGISTERS CLEARED
{SLIC 10}SLIC 10          0     5825   -15.9     1.7   -17.1    3035    2067    3246
 Delta POI (sl-ft2)                                               -17    -299      12
Mass Properties Translated by  833  0  414

SLIC 10
                   X=   817.1 in  Ix=      3035 sl-ft2  Ixy=      -17 sl-ft2
Wt.=    5825 lb    Y=     1.7 in  Iy=      2067 sl-ft2  Ixz=     -299 sl-ft2
                   Z=   396.9 in  Iz=      3246 sl-ft2  Iyz=       12 sl-ft2
TOTAL SAVED  (Label SLIC 10)

------ REGISTERS CLEARED
{ORUC 10}ORUC AFTER FGS3  0     7090   -26.9     2.4   -25.9    4290    3629    5072
 Delta POI (sl-ft2)                                                88    -218     213
Mass Properties Translated by  998.2  0  414

ORUC 10
                   X=   971.3 in  Ix=      4290 sl-ft2  Ixy=       88 sl-ft2
Wt.=    7090 lb    Y=     2.4 in  Iy=      3629 sl-ft2  Ixz=     -218 sl-ft2
                   Z=   388.1 in  Iz=      5072 sl-ft2  Iyz=      213 sl-ft2
TOTAL SAVED  (Label ORUC 10)

------ REGISTERS CLEARED
{FSS 10}FSS 10            0     4740    95.8     -.5   105.6    4791    2568    2736
 Delta POI (sl-ft2)                                                39    -342     110
Mass Properties Translated by  1075.2  0  300

FSS 10
                   X=  1171.0 in  Ix=      4791 sl-ft2  Ixy=       39 sl-ft2
Wt.=    4740 lb    Y=     -.5 in  Iy=      2568 sl-ft2  Ixz=     -342 sl-ft2
                   Z=   405.6 in  Iz=      2736 sl-ft2  Iyz=      110 sl-ft2
TOTAL SAVED  (Label FSS 10)

------ REGISTERS CLEARED
{SLIC LD}SLIC LANDING     0     5825   -15.9     1.7   -17.1    3035    2067    3246
 Delta POI (sl-ft2)                                               -17    -299      12
Mass Properties Translated by  833  0  414

SLIC LD
                   X=   817.1 in  Ix=      3035 sl-ft2  Ixy=      -17 sl-ft2
Wt.=    5825 lb    Y=     1.7 in  Iy=      2067 sl-ft2  Ixz=     -299 sl-ft2
                   Z=   396.9 in  Iz=      3246 sl-ft2  Iyz=       12 sl-ft2
TOTAL SAVED  (Label SLIC LD)

------ REGISTERS CLEARED
{ORUC LD}ORUC LANDING     0     7090   -26.9     2.4   -25.9    4290    3629    5072
 Delta POI (sl-ft2)                                                88    -218     213
Mass Properties Translated by  998.2  0  414

ORUC LD
                   X=   971.3 in  Ix=      4290 sl-ft2  Ixy=       88 sl-ft2
Wt.=    7090 lb    Y=     2.4 in  Iy=      3629 sl-ft2  Ixz=     -218 sl-ft2
                   Z=   388.1 in  Iz=      5072 sl-ft2  Iyz=      213 sl-ft2
TOTAL SAVED  (Label ORUC LD)

------ REGISTERS CLEARED
{FSS LD}FSS LANDING       0     4740    97.5     -.5   102.3    4249    1934    2440
 Delta POI (sl-ft2)                                                46    -150     113
Mass Properties Translated by  1075.2  0  300
```

```
FSS LD
                    X=  1172.7 in  Ix=      4249 sl-ft2  Ixy=       46 sl-ft2
Wt.=    4740 lb     Y=     -.5 in  Iy=      1934 sl-ft2  Ixz=     -150 sl-ft2
                    Z=   402.3 in  Iz=      2440 sl-ft2  Iyz=      113 sl-ft2
TOTAL SAVED  (Label FSS LD)

------ REGISTERS CLEARED
COMBINE CARRIER MASS PROPERTIES FOR EACH EVENT IN ORBITER COORDINATES

 -----------------------------------
 | TABLE 5-3, PRE-LAUNCH, INCL GSE |
 -----------------------------------
{FSS GSE}FSS GSE          0     5034  1174.7    -1.2   400.9    4708    1932    2909
 Delta POI (sl-ft2)                                                 57      28     133
{ORUC LH}ORUC LH          0     7362   972.0     2.1   388.6    4349    3689    5162
 Delta POI (sl-ft2)                                                 73    -199     231
{SLIC LH}SLIC LH          0     6592   811.4     1.7   397.6    3634    2629    3782
 Delta POI (sl-ft2)                                                -18    -228       9
{MIDDECK LH}MIDDECK AT L  0      194   520.0      .0   300.0       0       0       0

CARRIERS GSE
                    X=   965.4 in  Ix=     13184 sl-ft2  Ixy=     -520 sl-ft2
Wt.=   19182 lb     Y=     1.1 in  Iy=     98421 sl-ft2  Ixz=     2068 sl-ft2
                    Z=   394.0 in  Iz=    101547 sl-ft2  Iyz=      354 sl-ft2

------ REGISTERS CLEARED

 ---------------------------------------------------
 | TABLE 1-1, 4-1, 5-1, 5-4, SM4 LAUNCH MASS PROPS |
 ---------------------------------------------------
{FSS LH}FSS LH            0     4800  1175.4    -1.3   400.4    4395    1907    2582
 Delta POI (sl-ft2)                                                 58      35     132
{ORUC LH}ORUC LH          0     7362   972.0     2.1   388.6    4349    3689    5162
 Delta POI (sl-ft2)                                                 73    -199     231
{SLIC LH}SLIC LH          0     6592   811.4     1.7   397.6    3634    2629    3782
 Delta POI (sl-ft2)                                                -18    -228       9
{MIDDECK LH}MIDDECK AT L  0      194   520.0      .0   300.0       0       0       0

CARRIERS LH
                    X=   963.0 in  Ix=     12862 sl-ft2  Ixy=     -509 sl-ft2
Wt.=   18948 lb     Y=     1.1 in  Iy=     96479 sl-ft2  Ixz=     1904 sl-ft2
                    Z=   393.8 in  Iz=     99311 sl-ft2  Iyz=      355 sl-ft2
TOTAL SAVED  (Label CAR LH)

------ REGISTERS CLEARED

 -----------------------------------
 | TABLE 5-5, PRE-BERTH MASS PROPS |
 -----------------------------------
{FSS 1}FSS 1              0     4800  1170.9    -1.3   405.2    4863    2585    2792
 Delta POI (sl-ft2)                                                 45    -339     140
{ORUC LH}ORUC LH          0     7362   972.0     2.1   388.6    4349    3689    5162
 Delta POI (sl-ft2)                                                 73    -199     231
{SLIC LH}SLIC LH          0     6592   811.4     1.7   397.6    3634    2629    3782
 Delta POI (sl-ft2)                                                -18    -228       9
{MIDDECK LH}MIDDECK AT L  0      194   520.0      .0   300.0       0       0       0

STS PAYLOAD PRE-BERTHF
                    X=   961.9 in  Ix=     13414 sl-ft2  Ixy=     -511 sl-ft2
```

```
Wt.=   18948 lb    Y=     1.1 in  Iy=     95287 sl-ft2  Ixz=     2535 sl-ft2
                   Z=   395.0 in  Iz=     97568 sl-ft2  Iyz=      350 sl-ft2

------ REGISTERS CLEARED

 ----------------------------------------------------
 | TABLE 5-7, BERTHED PRE-EVA MASS PROPS, SA 90 DEG |
 ----------------------------------------------------
{TABLEA}AD CLOSE HGA STO  0    25998  1142.1    -1.3   653.3   70358   64124   25492
 Delta POI (sl-ft2)                                              362    1124     490
{FSS 1}FSS 1              0     4800  1170.9    -1.3   405.2    4863    2585    2792
 Delta POI (sl-ft2)                                               45    -339     140
{ORUC LH}ORUC LH          0     7362   972.0     2.1   388.6    4349    3689    5162
 Delta POI (sl-ft2)                                               73    -199     231
{SLIC LH}SLIC LH          0     6592   811.4     1.7   397.6    3634    2629    3782
 Delta POI (sl-ft2)                                              -18    -228       9
{MIDDECK LH}MIDDECK AT L  0      194   520.0      .0   300.0       0       0       0

STS PAYLOAD PRE-CHANGEOUT
                   X=  1066.1 in  Ix=    241626 sl-ft2  Ixy=    -1153 sl-ft2
Wt.=   44946 lb    Y=     -.3 in  Iy=    394060 sl-ft2  Ixz=   113765 sl-ft2
                   Z=   544.4 in  Iz=    199880 sl-ft2  Iyz=     -599 sl-ft2

------ REGISTERS CLEARED

 ----------------------------------------------------
 | TABLE 5-8, BERTHED PRE-EVA MASS PROPS, SA 0 DEG |
 ----------------------------------------------------
{TABLEC}EVENT 0 RE SM4 S  0    25998  1142.0    -1.3   653.3   69219   64080   26586
 Delta POI (sl-ft2)                                              331    1100     521
{FSS 1}FSS 1              0     4800  1170.9    -1.3   405.2    4863    2585    2792
 Delta POI (sl-ft2)                                               45    -339     140
{ORUC LH}ORUC LH          0     7362   972.0     2.1   388.6    4349    3689    5162
 Delta POI (sl-ft2)                                               73    -199     231
{SLIC LH}SLIC LH          0     6592   811.4     1.7   397.6    3634    2629    3782
 Delta POI (sl-ft2)                                              -18    -228       9
{MIDDECK LH}MIDDECK AT L  0      194   520.0      .0   300.0       0       0       0

STS PAYLOAD CAPTURE
                   X=  1066.1 in  Ix=    240418 sl-ft2  Ixy=    -1184 sl-ft2
Wt.=   44946 lb    Y=     -.3 in  Iy=    393892 sl-ft2  Ixz=   113680 sl-ft2
                   Z=   544.4 in  Iz=    200920 sl-ft2  Iyz=     -568 sl-ft2

------ REGISTERS CLEARED

 ----------------------------------
 | TABLE 5-9, POST RSU CHANGEOUT |
 ----------------------------------
{11}EVENT 1 POST RSU (3   0    25996  1142.0    -1.3   653.3   69218   64078   26584
 Delta POI (sl-ft2)                                              331    1099     521
{FSS 1}FSS 1              0     4800  1170.9    -1.3   405.2    4863    2585    2792
 Delta POI (sl-ft2)                                               45    -339     140
{ORUC 1}ORUC 1            0     7362   972.0     2.1   388.6    4348    3688    5161
 Delta POI (sl-ft2)                                               73    -199     231
{SLIC 1}SLIC 1            0     6592   811.4     1.7   397.6    3634    2629    3782
 Delta POI (sl-ft2)                                              -18    -228       9
{MIDDECK 1}MIDDECK 1      0      196   520.0      .0   300.0       0       0       0

STS PAYLOAD 1
                   X=  1066.1 in  Ix=    240438 sl-ft2  Ixy=    -1184 sl-ft2
```

```
Wt.=   44946 lb    Y=     -.3 in  Iy=    394026 sl-ft2  Ixz=   113730 sl-ft2
                   Z=   544.4 in  Iz=    201031 sl-ft2  Iyz=     -568 sl-ft2

------ REGISTERS CLEARED

 -------------------------------------
 | TABLE 5-10, POST DSC INSTALLATION |
 -------------------------------------
{21}EVENT 2 STS COORD (-  0    26013  1142.1    -1.2   653.4   70370   64132   25510
 Delta POI (sl-ft2)                                               353    1119     495
{FSS 2}FSS 2              0     4800  1170.9    -1.3   405.2    4863    2585    2792
 Delta POI (sl-ft2)                                                45    -339     140
{ORUC 2}ORUC 2            0     7343   972.0     1.9   388.5    4322    3679    5142
 Delta POI (sl-ft2)                                                69    -202     218
{SLIC 2}SLIC 2            0     6592   811.4     1.7   397.6    3634    2629    3782
 Delta POI (sl-ft2)                                               -18    -228       9
{MIDDECK 2}MIDDECK 2      0      198   520.0      .0   300.0       0       0       0

STS PAYLOAD 2
                   X=  1066.1 in  Ix=    241683 sl-ft2  Ixy=    -1125 sl-ft2
Wt.=   44946 lb    Y=     -.3 in  Iy=    394376 sl-ft2  Ixz=   113864 sl-ft2
                   Z=   544.5 in  Iz=    200123 sl-ft2  Iyz=     -541 sl-ft2

------ REGISTERS CLEARED

 ----------------------------------------
 | TABLE 5-13, POST COS/COSTAR CHANGEOUT |
 ----------------------------------------
{31}EVENT 3 STS COORD (-  0    26266  1150.2    -6.9   652.3   64836   71079   25582
 Delta POI (sl-ft2)                                              -382    -367     972
{FSS 3}FSS 3              0     4800  1170.9    -1.3   405.2    4863    2585    2792
 Delta POI (sl-ft2)                                                45    -339     140
{ORUC 3}ORUC 3            0     7089   971.2     2.0   388.2    4301    3606    5069
 Delta POI (sl-ft2)                                                77    -209     216
{SLIC 3}SLIC 3            0     6592   811.4     1.7   397.6    3634    2629    3782
 Delta POI (sl-ft2)                                               -18    -228       9
{MIDDECK 3}MIDDECK 3      0      198   520.0      .0   300.0       0       0       0

STS PAYLOAD 3
                   X=  1071.7 in  Ix=    234433 sl-ft2  Ixy=    -4426 sl-ft2
Wt.=   44946 lb    Y=    -3.6 in  Iy=    406587 sl-ft2  Ixz=   116751 sl-ft2
                   Z=   545.4 in  Iz=    207424 sl-ft2  Iyz=    -3507 sl-ft2

------ REGISTERS CLEARED

 ---------------------------------------
 | TABLE 5-14, POST NOBL 7,8 CHANGEOUT |
 ---------------------------------------
{41}EVENT 4 STS COORD (+  0    26283  1156.0     1.0   652.3   71081   64866   25611
 Delta POI (sl-ft2)                                               382    -976    -368
{FSS 4}FSS 4              0     4800  1170.9    -1.3   405.2    4863    2585    2792
 Delta POI (sl-ft2)                                                45    -339     140
{ORUC 4}ORUC 4            0     7070   971.2     2.2   388.2    4284    3605    5053
 Delta POI (sl-ft2)                                                75    -208     219
{SLIC 4}SLIC 4            0     6592   811.4     1.7   397.6    3634    2629    3782
 Delta POI (sl-ft2)                                               -18    -228       9
{MIDDECK 4}MIDDECK 4      0      200   520.0      .0   300.0       0       0       0

STS PAYLOAD 4
                   X=  1075.2 in  Ix=    240507 sl-ft2  Ixy=     -163 sl-ft2
```

```
Wt.=   44946 lb    Y=     1.1 in  Iy=    405743 sl-ft2  Ixz=   119703 sl-ft2
                   Z=   545.5 in  Iz=    212666 sl-ft2  Iyz=      -77 sl-ft2

------ REGISTERS CLEARED

 -------------------------------------
 | TABLE 5-15, POST NOBL 5 CHANGEOUT |
 -------------------------------------
{51}EVENT 5 STS COORD, P  0    26292  1156.0     1.0   652.3   71093   64866   25623
 Delta POI (sl-ft2)                                              378    -976    -366
{FSS 5}FSS 5              0     4800  1170.9    -1.3   405.2    4863    2585    2792
 Delta POI (sl-ft2)                                               45    -339     140
{ORUC 5}ORUC 5            0     7059   971.2     2.3   388.2    4275    3605    5044
 Delta POI (sl-ft2)                                               74    -208     220
{SLIC 5}SLIC 5            0     6592   811.4     1.7   397.6    3634    2629    3782
 Delta POI (sl-ft2)                                              -18    -228       9
{MIDDECK 5}MIDDECK 5      0      203   520.0      .0   300.0      -0      -0      -0
 Delta POI (sl-ft2)                                                0      -0       0

STS PAYLOAD 5
                   X=  1075.2 in  Ix=    240520 sl-ft2  Ixy=     -170 sl-ft2
Wt.=   44946 lb    Y=     1.1 in  Iy=    405893 sl-ft2  Ixz=   119750 sl-ft2
                   Z=   545.5 in  Iz=    212812 sl-ft2  Iyz=      -80 sl-ft2

------ REGISTERS CLEARED

 -----------------------------------------
 | TABLE 5-18, POST WFPCII/WFC3 CHANGEOUT |
 -----------------------------------------
{61}EVENT 6 STS COORD (-  0    26636  1141.6    -1.1   651.8   70085   65187   27024
 Delta POI (sl-ft2)                                              356    1101     402
{FSS 6}FSS 6              0     4800  1170.9    -1.3   405.2    4863    2585    2792
 Delta POI (sl-ft2)                                               45    -339     140
{ORUC 6}ORUC 6            0     7059   971.2     2.3   388.2    4275    3605    5044
 Delta POI (sl-ft2)                                               74    -208     220
{SLIC 6}SLIC 6            0     6248   812.0     1.8   395.6    3181    2506    3766
 Delta POI (sl-ft2)                                              -19    -198      12
{MIDDECK 6}MIDDECK 6      0      203   520.0      .0   300.0      -0      -0      -0
 Delta POI (sl-ft2)                                                0      -0       0

STS PAYLOAD 6
                   X=  1069.3 in  Ix=    238418 sl-ft2  Ixy=    -1087 sl-ft2
Wt.=   44946 lb    Y=     -.2 in  Iy=    387769 sl-ft2  Ixz=   111191 sl-ft2
                   Z=   546.9 in  Iz=    196538 sl-ft2  Iyz=     -606 sl-ft2

------ REGISTERS CLEARED

 --------------------------------------
 | TABLE 5-19, POST BATTERY CHANGEOUT |
 --------------------------------------
{71}EVENT 7 STS COORD (-  0    26628  1141.6    -1.1   651.8   70084   65178   27014
 Delta POI (sl-ft2)                                              356    1103     402
{FSS 7}FSS 7              0     4800  1170.9    -1.3   405.2    4863    2585    2792
 Delta POI (sl-ft2)                                               45    -339     140
{ORUC 7}ORUC 7            0     7059   971.2     2.3   388.2    4275    3605    5044
 Delta POI (sl-ft2)                                               74    -208     220
{SLIC 7}SLIC 7            0     6280   812.2     1.8   395.7    3182    2514    3774
 Delta POI (sl-ft2)                                              -19    -196      12
{MIDDECK 7}MIDDECK 7      0      179   520.0      .0   300.0       0       0      -0
 Delta POI (sl-ft2)                                                0      -0       0
```

```
STS PAYLOAD 7
                   X=  1069.5 in  Ix=    238220 sl-ft2  Ixy=    -1087 sl-ft2
Wt.=   44946 lb    Y=     -.2 in  Iy=    386378 sl-ft2  Ixz=   110717 sl-ft2
                   Z=   546.9 in  Iz=    195346 sl-ft2  Iyz=     -606 sl-ft2

------ REGISTERS CLEARED

 ------------------------------------------------
 | TABLE 5-22, POST ASCS RADIATOR INSTALLATION |
 ------------------------------------------------
{81}EVENT 8 STS COORD (-  0    27051  1143.4    -6.0   650.2   69122   68933   27597
 Delta POI (sl-ft2)                                            -2512    1212     973
{FSS 8}FSS 8              0     4800  1170.9    -1.3   405.2    4863    2585    2792
 Delta POI (sl-ft2)                                               45    -339     140
{ORUC 8}ORUC 8            0     7078   971.3     2.4   388.1    4287    3622    5066
 Delta POI (sl-ft2)                                               87    -215     213
{SLIC 8}SLIC 8            0     5825   817.1     1.7   396.9    3035    2067    3246
 Delta POI (sl-ft2)                                              -17    -299      12
{MIDDECK 8}MIDDECK 8      0      192   520.0      .0   300.0      -0      -0      -0
 Delta POI (sl-ft2)                                                0      -0       0

STS PAYLOAD 8
                   X=  1074.3 in  Ix=    233907 sl-ft2  Ixy=    -5886 sl-ft2
Wt.=   44946 lb    Y=    -3.1 in  Iy=    379324 sl-ft2  Ixz=   107014 sl-ft2
                   Z=   548.5 in  Iz=    188475 sl-ft2  Iyz=    -2950 sl-ft2

------ REGISTERS CLEARED

 --------------------------------------
 | TABLE 5-23, POST STIK INSTALLATION |
 --------------------------------------
{91}EVENT 9 STS COORD (+  0    27111  1149.0     8.3   649.9   66758   71791   27624
 Delta POI (sl-ft2)                                              -82    -107   -1498
{FSS 9}FSS 9              0     4740  1171.0     -.5   405.6    4791    2568    2736
 Delta POI (sl-ft2)                                               39    -342     110
{ORUC 9}ORUC 9            0     7078   971.3     2.4   388.1    4287    3622    5066
 Delta POI (sl-ft2)                                               87    -215     213
{SLIC 9}SLIC 9            0     5825   817.1     1.7   396.9    3035    2067    3246
 Delta POI (sl-ft2)                                              -17    -299      12
{MIDDECK 9}MIDDECK 9      0      192   520.0      .0   300.0      -0      -0      -0
 Delta POI (sl-ft2)                                                0      -0       0

STS PAYLOAD 9
                   X=  1077.6 in  Ix=    230844 sl-ft2  Ixy=     2464 sl-ft2
Wt.=   44946 lb    Y=     5.5 in  Iy=    386114 sl-ft2  Ixz=   109194 sl-ft2
                   Z=   548.6 in  Iz=    192995 sl-ft2  Iyz=     2874 sl-ft2

------ REGISTERS CLEARED

 ------------------------------------------------------------
 | TABLE 5-26, POST FGS3/FGS3R CHANGEOUT & OCE-EK CONNECT |
 ------------------------------------------------------------
{101}EVENT 10 STS COORD,  0    27101  1149.0     8.3   650.0   66756   71779   27615
 Delta POI (sl-ft2)                                              -83    -112   -1499
{FSS 10}FSS 10            0     4740  1171.0     -.5   405.6    4791    2568    2736
 Delta POI (sl-ft2)                                               39    -342     110
{ORUC 10}ORUC 10          0     7090   971.3     2.4   388.1    4290    3629    5072
 Delta POI (sl-ft2)                                               88    -218     213
{SLIC 10}SLIC 10          0     5825   817.1     1.7   396.9    3035    2067    3246
```

```
 Delta POI (sl-ft2)                                                  -17    -299      12
{MIDDECK 10}MIDDECK 10    0      189   520.0      .0   300.0       -0      -0      -0
 Delta POI (sl-ft2)                                                   0      -0       0

STS PAYLOAD 10
                   X=  1077.6 in  Ix=    230861 sl-ft2  Ixy=     2465 sl-ft2
Wt.=   44946 lb    Y=     5.5 in  Iy=    386044 sl-ft2  Ixz=   109185 sl-ft2
                   Z=   548.6 in  Iz=    192912 sl-ft2  Iyz=     2876 sl-ft2

------ REGISTERS CLEARED

 -------------------------------------------
 | TABLE 5-2, 5-27, SM4 LANDING MASS PROPS |
 -------------------------------------------
{FSS LD}FSS LD            0     4740  1172.7     -.5   402.3    4249    1934    2440
 Delta POI (sl-ft2)                                                 46    -150     113
{ORUC LD}ORUC LD          0     7090   971.3     2.4   388.1    4290    3629    5072
 Delta POI (sl-ft2)                                                 88    -218     213
{SLIC LD}SLIC LD          0     5825   817.1     1.7   396.9    3035    2067    3246
 Delta POI (sl-ft2)                                                -17    -299      12
{MIDDECK LD}MIDDECK LAND  0      189   520.0      .0   300.0      -0      -0      -0
 Delta POI (sl-ft2)                                                  0      -0       0

CARRIERS LD
                   X=   969.6 in  Ix=     12075 sl-ft2  Ixy=     -313 sl-ft2
Wt.=   17845 lb    Y=     1.4 in  Iy=     87841 sl-ft2  Ixz=     2220 sl-ft2
                   Z=   393.8 in  Iz=     90479 sl-ft2  Iyz=      319 sl-ft2

------ REGISTERS CLEARED
**********************************************************************
 POST SM3B DATA IN METRIC, FOR TABLE 5-31
**********************************************************************
{PRESM4}POST SM3B EVENT   0    25998   256.0     1.3    -6.9   28171   65182   68736
 Delta POI (sl-ft2)                                               -518    1749    -331

 -------------------------------------------------------
 | TABLE 5-33 B, POST SM3B, HGA DEPL, SA O DEG - METRIC |
 -------------------------------------------------------

POST SM3B, SA3 AT 0 DEG,METRIC
                   X=     6.5 m  Ix=     38194 kg-m2  Ixy=     -703 kg-m2
Wt.=   11792 kg    Y=      .0 m  Iy=     88374 kg-m2  Ixz=     2372 kg-m2
                   Z=     -.2 m  Iz=     93194 kg-m2  Iyz=     -449 kg-m2
TOTAL SAVED  (Label METRIC0)

------ REGISTERS CLEARED
{TABLE529A}EVENT 0 PRE S  0    25998   256.1     1.3    -6.8   27077   65226   69876
 Delta POI (sl-ft2)                                               -488    1773    -362

 --------------------------------------------------------
 | TABLE 5-33 A, POST SM3B, HGA DEPL, SA 9O DEG - METRIC |
 --------------------------------------------------------

POST SM3B, SA3 AT 90 DEG,METRIC
                   X=     6.5 m  Ix=     36711 kg-m2  Ixy=     -662 kg-m2
Wt.=   11792 kg    Y=      .0 m  Iy=     88435 kg-m2  Ixz=     2404 kg-m2
                   Z=     -.2 m  Iz=     94738 kg-m2  Iyz=     -491 kg-m2
TOTAL SAVED  (Label METRIC90)

------ REGISTERS CLEARED
```