HUBBLE SPACE TELESCOPE
LIBRARY #TM 002162

ST-ICD-02E
29 JUNE 1984

LEVEL II
INTERFACE CONTROL DOCUMENT

AXIAL SI TO OTA AND SSM

ST/CM-08

SUPPORT SYSTEMS MODULE
SPACE TELESCOPE PROJECT

LMSC
RELEASED
CONTROLLED

SUBMITTED IN ACCORDANCE WITH REQUIREMENTS OF
CONTRACT NAS 8-32697, DPD 539

Approved by NASA

LOCKHEED MISSILES & SPACE COMPANY, INC.
SPACE SYSTEMS DIVISION · SUNNYVALE, CALIFORNIA

ST-ICD-02E
29 JUNE 1984

SPACE TELESCOPE
LEVEL II
INTERFACE CONTROL DOCUMENT
AXIAL SCIENTIFIC INSTRUMENTS TO
OPTICAL TELESCOPE ASSEMBLY AND SUPPORT SYSTEMS
MODULE (AXIAL SI TO OTA & SSM)

NASA APPROVED

APPROVED: _____
W.F. WRIGHT
SSM PROJECT MANAGER
LOCKHEED MISSILES & SPACE
CO., INC.

APPROVED: _____
D.J. McCARTHY
OTA PROJECT MANAGER
PERKIN-ELMER CORPORATION

APPROVED: _____
G.M. LEVIN, MANAGER
SCIENTIFIC INSTRUMENTS OFFICE
GODDARD SPACE FLIGHT CENTER

APPROVED: _____
F.A. SPEER
SPACE TELESCOPE PROJECT
MANAGER
MARSHALL SPACE FLIGHT
CENTER

SPECIFICATION NO. ST-ICD-02

PAGE i

CONFIGURATION CHART

AS OF 29 June 1984

SPECIFICATION ISSUE	ECP'S	EFFECTIVITY
REVISION E 6-29-84	IRN 57, 12-9-82, PCN:AN0752, CCBD:AN2-01-0843 IRN 58, 1-7-83, PCN:AN0906, CCBD:AN2-01-0861 IRN 59, 7-22-83, PCN:AN1052, CCBD:AN2-01-0933 IRN 60, 8-11-83, PCN:AN0893, CCBD:AN2-01-0893 IRN 61, 3-15-84, PCN:AN1257, CCBD:AN2-01-1008 IRN 62, 3-15-84, PCN:AN1132, CCBD:AN2-01-1011 MSFC Rev "E" Authorization PCN: AN1520 Contracting Officers Letter: AP54A-84-223 dated 31 May, 1984	N/A

TA-09-10/77 (OT)

RELEASE DATE:

DOCUMENT CHANGE RECORD

SHEET: ii

CHANGE DOCUMENT:	ST-ICD-02 (NUMBERED)	E (REVISION)	29 June 1984 (DATED)	COPY NO.

CHANGE (DATE)	TO INCORPORATE THE CHANGE INTO THE DOCUMENT: 1. ADD PAGES;	2. REMOVE PAGES;	OTHER COMMENTS REGARDING THIS CHANGE (AUTH., INSTRUCT., ETC.)
Basic	Coordination copy	date 10-25-80. Not	released.
A	Coordination copy	dated 03-16-80. Not	released.
B	Coordination copy changed to ST-ICD-	dated 03-28-80. Not 02 as per TD 095 dat	released. (LMSC 4171770 ed 04-01-80).
C 4-10-80	102 Printed Pages	N/A LMSC RELEASED CONTROLLED	ICD BASELINED. PCN: AN0340, ECP: E-0127 NASA Approved as per CCBD: AN2-01-0218, 7-9-80 All Approved Prebaseline PIRNs (2001 through 2045) Included.
D 12-22-82	147 Printed Pages	N/A	PCN: AN0995, NASA Approved as per Contracting Officers Letter AP33B-2-656. All Approved IRNs (1 through 56) are included.
E 6-29-84	147 Printed Pages	N/A	PCN: AN1520, NASA Approved as per Contracting Officers Letter AP54A-84-223. All Approved IRNs (57 through 62) are included.
IRN 63 7-03-84	ii, xi, 3.7-4, 10.3-2, 10.3-22, 10.3-23, 10.3-24	ii, xi, 3.7-4	(PIRN 2201); SI Generated Ripple & Noise. See SCM-2000. PCN: AN1304 CCBD: AN2-01-1095
IRN 64 7-03-84	ii, 3.6-3	ii, 3.6-3	(PIRN 2203); FPS Aft Barrier Tolerance Change. See SCM-2000 PCN: AN1370 CCBD: AN2-01-1097
Admin. Changes 8-22-84	ii, x, xi, 10.3-1, 10.1-2, 10.1-4, 10.1-6, 10.1-7, 10.1-8, 10.1-11, 10.2-5, 10.3-3, 10.3-4, 10.3-5, 10.3-6, 10.3-7,	ii, x, xi, 10.3-1, 10.1-2, 10.1-4, 10.1-6, 10.1-7, 10.1-8, 10.1-11, 10.2-5, 10.3-2, 10.3-3, 10.3-4, 10.3-5, 10.3-6	The purpose of the administrative changes is to incorporate retyped DAR's for clarity

(Supersedes pg. ii dated 29 June 1984)

MSFC - Form 3948 (March 1983) NOTE: After revising the document, file this sheet in document preceding table of contents.

RELEASE DATE:

DOCUMENT CHANGE RECORD

SHEET: iia

CHANGE DOCUMENT: ST-ICD-02 (NUMBERED)	E (REVISION)	29 June 1984 (DATED)	COPY NO.

CHANGE (DATE)	TO INCORPORATE THE CHANGE INTO THE DOCUMENT: 1. ADD PAGES;	2. REMOVE PAGES;	OTHER COMMENTS REGARDING THIS CHANGE (AUTH., INSTRUCT., ETC.)
Admin. Changes (Con't)	10.3-8, 10.3-9, 10.3-10, 10.3-11, 10.3-12, 10.3-13, 10.3-14, 10.3-15, 10.3-16, 10.3-17, 10.3-18, 10.3-19, 10.3-20, 10.3-21, 10.4-2, iia	10.3-7, 10.3-8, 10.3-9, 10.3-10, 10.3-11, 10.3-12, 10.3-13, 10.3-14, 10.3-15, 10.3-16, 10.3-17, 10.3-18, 10.3-19, 10.3-20, 10.4-2	LMSC RELEASED CONTROLLED
IRN 65 (8-27-84)	iia, 3.6-7, 10.1-1, 10.1-12	iia, 3.6-7, 10.1-1	(PIRN 2207); FOS Cold Hold Power Requirement DAR. See SCM-2000. PCN: AN1416 CCBD: AN2-01-1111
IRN 66 (8-27-84)	iia, 3.5-8, 10.1-1, 10.1-13	iia, 3.5-8, 10.1-1	(PIRN 2211); FOS CG Position Deviation. See SCM-2000. PCN: AN1496 CCBD: AN2-01-1116
IRN 67 (11-20-84)	iia, 3.5-3	iia, 3.5-3	(PIRN 2212); Crew Member Changeout Loads. See SCM-2000. PCN: AN1519 CCBD: AN2-01-1130
IRN 68 (11-20-84)	iia, 3.5-6, 3.5-8	iia, 3.5-6, 3.5-8	(PIRN 2193R1); SI Attachment Flexibility. See SCM-2000. PCN: AN1119 CCBD: AN2-01-1131
IRN 69 (11-20-84)	iia, 3.7-2	iia, 3.7-2	(PIRN 2210); Replace 25A Fuse with 20A Fuse. See SCM-2000. PCN: AN1476 CCBD: AN2-01-1133
(Supersedes pg. iia, dated 27 August 1984)			

MSFC - Form 3948 (March 1983) NOTE: After revising the document, file this sheet in document preceding table of contents.

RELEASE DATE:

DOCUMENT CHANGE RECORD

SHEET: iib

CHANGE DOCUMENT: ST-ICD-02 (NUMBERED)	E (REVISION)	29 June 1984 (DATED)	COPY NO.

CHANGE (DATE)	TO INCORPORATE THE CHANGE INTO THE DOCUMENT: 1. ADD PAGES;	2. REMOVE PAGES;	OTHER COMMENTS REGARDING THIS CHANGE (AUTH., INSTRUCT., ETC.)
IRN 70 (11-20-84)	iib, vii, ix, 3.7-10, 3.7-11, 3.7-12	vii, ix, 3.7-10	(PIRN 2209); Radiated Electrical Field Emission Requirements. See SCM-2000. PCN: AN1469 CCBD: AN2-01-1140
IRN 71 (11-20-84)	iib, iv, 3.3-2, 3.3-5, 3.3-19, 3.3-19a	iib, iv, 3.3-2, 3.3-5, 3.3-19	(PIRN 2202R1); Alignment of SIs Within the OTA. See SCM-2000. PCN: AN1328 CCBD: AN2-01-1149
IRN 72 (11-20-84)	iib, x, 10.1-1, 10.1-14, 10.1-15	iib, x, 10.1-1	(PIRN 2200R1); FOS Generated Mass vs Mode Frequency. See SCM-2000. PCN: AN1424 CCBD: AN2-01-1155
IRN 73 (11-20-84)	iib, xi, 10.3-2, 10.3-25, 10.3-26	iib, xi, 10.3-2	(PIRN 2192); Hold Mode Power. See SCM-2000. PCN: AN1100 CCBD: AN2-01-1156
Admin. Changes	iib, 3.3-6, 3.3-10	iib, 3.3-6, 3.3-10	The purpose of the administrative changes is to correct incorrectly incorporated changes of previous IRNs.
IRN 74 (01-14-85)	iib, xi, 3.5-8, 10.3-2, 10.3-27	iib, xi, 3.5-8 10.3-2	(PIRN 2204); FOC Maximum Weight Change. See SCM-2000. PCN: AN1391 CCBD: AN2-01-1186
IRN 75 (3-05-85)	iib, x, xi, 10.1-1, 10.1-16, 10.1-17, 3.3-3, 3.3-18	iib, x, xi, 10.1-1, 3.3-3, 3.3-18	(PIRN 2216); Incorporate In-plane Heat Pipe Configuration. See SCM-2000. PCN: AN1729 CCBD: AN2-01-1204

(Supersedes pg. iib dated 14 January 1985)

LMSC RELEASED CONTROLLED

MSFC - Form 3948 (March 1983) NOTE: After revising the document, file this sheet in document preceding table of contents.

RELEASE DATE:

DOCUMENT CHANGE RECORD

CHANGE DOCUMENT:	ST-ICD-02 (NUMBERED)	E (REVISION)	29 June 1984 (DATED)	COPY NO.

CHANGE (DATE)	TO INCORPORATE THE CHANGE INTO THE DOCUMENT: 1. ADD PAGES:	2. REMOVE PAGES:	OTHER COMMENTS REGARDING THIS CHANGE (AUTH., INSTRUCT., ETC.)
IRN 76 (3-29-85)	iic, vii, xi, 3.7-10, 10.4-1, 10.4-4,	vii, xi, 3.7-10, 10.4-1	(PIRN 2217); HSP Susceptibility. See SCM-2000. PCN: AN1744 CCBD: AN2-01-1217
IRN 77 (5-03-85)	iic, 3.5-5	iic, 3.5-5	(PIRN 2215); Orbiter Cargo Bay Acoustic Levels. See SCM-2000. PCN: AN1346 CCBD: AN2-01-1248
IRN 78 (08-28-85)	iic, x, 3.7-4, 3.7-7, 10.2-1, 10.2-7, 10.2-8	iic, x, 3.7-4, 3.7-7, 10.2-1	(PIRN 2208R1); HRS Requirements; Conducted Emissions Test CE01/CE03. See SCM-2000. PCN: AN1510 CCBD: AN2-01-1299
IRN 79 (09-27-85)	iic, xi, 10.3-2, 10.3-28, 10.3-29, 10.3-30	iic, xi, 10.3-2	(PIRN 2218); FOC Generated Radiated Electric Field Emissions Waiver. See SCM-2000. PCN: AN1908 CCBD: AN2-01-1321
IRN 80 (09-27-85)	iic, x, 3.7-10, 3.7-11, 3.7-12, 10.1-1, 10.1-18, 10.1-19, 10.1-20	iic, x, 3.7-10, 3.7-11, 3.7-12, 10.1-1	(PIRN 2220); RE02 Exceedance. See SCM-2000. PCN: AN1930 CCBD: AN2-01-1322
IRN 81 (12-16-85)	iic, 3.6-9a	iic	(PIRN 2226); Initial Hot Deployment Temperature. See SCM-2000. PCN: AN2042 CCBD: AN2-01-1387
Admin. Change (12-16-85)	iic, 2.1-1	iic, 2.1-1	The purpose of this administrative change is to correct incorrectly incorporated changes of previous IRNs.
	(Supersedes pg. iic dated 12-16-85)		

MSFC - Form 3948 (March 1983) NOTE: After revising the document, file this sheet in document preceding table of contents.

RELEASE DATE:

DOCUMENT CHANGE RECORD

SHEET: iid

CHANGE DOCUMENT:	ST-ICD-02	E	29 June 1984	COPY NO.
	NUMBERED	REVISION	DATED	

CHANGE (DATE)	TO INCORPORATE THE CHANGE INTO THE DOCUMENT: 1. ADD PAGES;	2. REMOVE PAGES;	OTHER COMMENTS REGARDING THIS CHANGE (AUTH., INSTRUCT., ETC.)
IRN 82 1-13-86	iid, xi 3.7-10, 10.5-1, 10.5-2,10.5-3	xi, 3.7-10	(PIRN 2221); STAR Narrow-band Radiated Field Emissions. See SCM-2000. PCN: AN2134 CCBD: AN2-01-1394
IRN 83 1-13-86	iid, xi, 3.7-4 , 10.5-1, 10.5-4, 10.5-5	iid, xi, 3.7-4, 10.5-1	(PIRN 2223); STAR Generated Ripple & Noise (Conducted Emissions). See SCM-2000. PCN: AN2136 CCBD: AN2-01-1395
IRN 84 2-19-86	iid, 3.3-13	iid, 3.3-13	(PIRN 2224); SI Forward Guide Block Modification. See SCM-2000. PCN: AN2063 CCBD: AN2-01-1431
IRN 85 4-07-86	iid, 3.6-9a	iid, 3.6-9a	(PIRN 2229); Initial Hot Deployment. See SCM-2000. PCN: AN2243 CCBD: AN2-01-1457
IRN 86 5-06-86	iid, 3.3-2, 3.3-5 thru 3.3-12, 3.3-19, 3.4-4, 10.1-1, 10.1-21, 10.1-22	iid, 3.3-2, 3.3-5 thru 3.3-12, 3.3-19, 3.4-4, 10.1-1	(PIRN 2214R2); FOS Aperture Position. See SCM-2000. PCN: AN1573 CCBD: AN2-01-1464
IRN 87 5-07-86	iid, x, 3.7-10, 10.2-1, 10.2-9	iid, x, 3.7-10, 10.2-1	(PIRN 2231); Conducted Susceptibility Test, (Administrative/Documentation Change). See SCM-2000. PCN: AN1425 CCBD: AN2-01-1478
IRN 88 5-09-86	iid, xi, 10.4-1, 10.4-5	iid, xi, 10.4-1	(PIRN 2219R1); HSP Generated Ripple & Noise. See SCM-2000. PCN: AN2133 CCBD: AN2-01-1481

(Supersedes pg. iid dated 2-19-86)

RELEASE DATE:

DOCUMENT CHANGE RECORD

SHEET: iie

CHANGE DOCUMENT: ST-ICD-02 (NUMBERED) E (REVISION) 29 June 1984 (DATED) COPY NO.

CHANGE (DATE)	TO INCORPORATE THE CHANGE INTO THE DOCUMENT: 1. ADD PAGES:	2. REMOVE PAGES:	OTHER COMMENTS REGARDING THIS CHANGE (AUTH., INSTRUCT., ET)
IRN 89 5-9-86	iie, xi, 3.7-4, 10.5-1, 10.5-6,	xi, 3.7-4, 10.5-1, 10.5-6, 10.5-7	(PIRN 2222); STAR Generated Ripple & Noise (Heater Relays & Thermostats). See SCM-2000. PCN: AN2135 CCBD: AN2-01-1482
IRN 90 (2-6-87)	iie, 3.6-8, 3.6-9	iie, 3.6-8, 3.6-9	(PIRN 2230); Second Day Deployment. See SCM-2000. PCN: AN1228 CCBD: AN2-01-1580
IRN 91 (8-6-87)	iie, vi, ix, 3.6-17, 3.6-17a	iie, vi, ix, 3.6-17	(PIRN 2151R4): SSM Venting Provisions. See SCM-2000. PCN: AN0716 CCBD: AN2-01-1644
IRN 92 (5-5-88)	iie, 3.3-14	iie, 3.3-14	(PIRN 2206); Rear Guideraii Envelope. See SCM-2000 PCN: AN1503 CCBD: AN2-01-1760
IRN 93 (7-7-88)	iie, xi, 10.3-2, 10.3-31	iie, xi, 10.3-2	(PIRN 2232); FOC Bus Voltage Drop out: See SCM 2000 PCN: AN3032 CCBD: AN2-01-1803
IRN 94 (7-21-88)	iie, xi, 10.3-2 10.3-32	iie, xi, 10.3-2	(PIRN 2233); Connector Location: See SCM-2000 PCN: AN3053 CCBD: AN2-01-1809
IRN 95 (9-23-88)	iie, xi, 10.4-1, 10.4-6, 10..4-7	iie, xi, 10.4-1	(PIRN 2234); HSP Minimum Radius: See SCM-2000 PCN: AN3274 CCBD: AN2-01-1839
IRN 96 (8-8-89)	iie, 3.6-7	iie, 3.6-7	(PIRN 2236); TBR Removal PCN: AN3629 CCBD: AN2-01-1977
	(Supersedes pg. iie, dated 8 August 1989)		

Admin Change

MSFC - Form 528 (May 1978) NOTE: After revising the document, file this sheet in document preceding table of contents.

RELEASE DATE: 28 JANUARY 1994

DOCUMENT CHANGE RECORD

CHANGE DOCUMENT:	ST-ICD-02 (NUMBERED)	E (REVISION)	27 FEBRUARY 1985 (DATED)	COPY NO.

CHANGE (DATE)	TO INCORPORATE THE CHANGE INTO THE DOCUMENT: 1. ADD PAGES:	2. REMOVE PAGES:	OTHER COMMENTS REGARDING THIS CHANGE (AUTH., INSTRUCT., ETC.)
IRN 097 (11 OCT 1989)	iif, 3.3-15	3.3-15	(PIRN 2235) Delete P-E TBD's from the Ground Handling Interface PCN; AN 3721 CCBD: AN2-01-2033
Admin Change (11 OCT 1989)	iic	iie	
IRN 098 (13 NOV 1989)	iif, viii, 3.6-3	iif, viii, 3.6-3	(PIRN 2237) OTA EPS Thermal Configuration (HST FRR RID ITEM) PCN: AN3750 CCBD: AN2/01-2063
IRN 099 (24 JAN 1990)	iif, 3.6-8	iif, 3.6-8	(PIRN 2238) Normal Science Misson Configuration PCN: AN3806 CCBD: AN2-01-2101
IRN 100 (29 MAY 1992)	iif, viia, viib, viic ix, ixa, x, 1.1-1 1.1-2 4.1-1, 4.2-1 4.2-2, 4.3-1 through 4.3-30, 4.4-1 through 4.4-5, 4.5-1 through 4.5-7, 4.6-1 through 4.6-20, 4.7-1 through 4.7-11, 4.8-1 through 4.8-5, 4.9-1 4.10-1, 4.11-1 through 4.11-4, 4.12-1	iif, ix, x, 1.1-1, 1.1-2	(PIRN 2239R1) Add ORI Interface Requirements To ST-ICD-02 CCR 3182 HST CCB Minutes #377
IRN 101 (7 MAY 1993)	iif, x, 10.2-1 10.2-10, 10.2-11 10.2-12, 10.2-13	iif, x, 10.2-1	(PIRN 2240) Radiated Emissions Waiver to ST-ICD-02E CCR 3634 HST CCB Minutes #408

LMSC RELEASE CONTROLLED

(SUPERSEDES PAGE iif DATED 29 MAY 1992)

NOTE: After revising the document, file this sheet in document preceding table of contents.

DOCUMENT CHANGE RECORD

Release Date: 01/26/96

Axial SI to OTA & SSM Interface Control Document DOCUMENT TITLE	ST-ICD-02 DOCUMENT NUMBER	E REVISION	29 June 84 DATED

CHANGE (DATE)	TO INCORPORATE THE CHANGE INTO THE DOCUMENT: 1. ADD PAGES	2. REMOVE PAGES	OTHER COMMENTS REGARDING THIS CHANGE(AUTH.,INSTR)
IRN 102 (9 JUL 1993)	iig, xii, 10.6-1, 10.6-2, 10.6-3, 10.6-4		(PIRN 224R1) COSTAR Exterior Properties Waiver to ST-ICD-02E. CCR 3703. HST CCB Minutes #413.
IRN 103 (25 AUG 1993)	iig, xii, 10.6-5, 10.6-6, 10.6-7, 10.6-8, 10.6-9, 10.6-10, 10.6-11 10.6-12, 10.6-13, 10.6-14, 10.6-15	iig, xii	(PIRN's 2243, 2244, 2245, 2246, 2247, 2248, 2249) COSTAR Waivers to ST-ICD-02E Requirements. CCRs 3769, 3770, 3771, 3780, 3781, 3782, 3783. HST CCB Minutes #418.
IRN 104 (15 OCT 1993)	iig, x, 10.2-1, 10.2-14	iig, x, 10.2-1	(PIRN 2250) GHRS Repair Kit Envelope Intrusion Waiver CCR 3842. HST CCB Minutes #421.
IRN 105 (18 MAR 1994)	iig, viia, ixa, 4.4-1, 4.4-2, 4.4-3, 4.4-3a, 4.4-6, 4.4-7	iig, viia, ixa, 4.4-1, 4.4-2, 4.4-3	(PIRN 2242R2) Update Optical Interface Section. CCR 3758R1. HST CCB Minutes #432.
IRN 106 (24 MAR 1995)	iig, viia - viic, ix, ixa, x, 4.1-1, 4.2-1, 4.3-2, 4.3-18, 4.3-20, 4.3-20a, 4.3-25, 4.4-1, 4.4-3, 4.4-4, 4.4-5, 4.4-6, 4.4-6a - 4.4-6e, 4.5-1- 4.5-4, 4.5-7, 4.6-8, 4.6-11, 4.6-11a, 4.6-13, 4.6-19, 4.7-1, 4.7-3, 4.7-8 - 4.7-11, 4.8-1, 4.8-1a, 4.10-1, 4.10-2, 4.11-1 - 4.11-5	iig, viia - viic, ix, ixa, x, 4.1-1, 4.2-1, 4.3-2, 4.3-18, 4.3-20, 4.3-25, 4.4-1, 4.4-3, 4.4-3a, 4.4-4, 4.4-5, 4.4-6, 4.5-1 - 4.5-4, 4.5-7, 4.6-8, 4.6-11, 4.6-13, 4.6-19, 4.7-1, 4.7-3, 4.7-8 - 4.7-11, 4.8-1, 4.10-1, 4.11-1 - 4.11-4	(PIRN 2252R1). Incorporate STR-02 and Post SM Data into ICD-02. CCR 4076. HST CCB Minutes #454.

NOTE: After revising the document, file this sheet in document preceeding table of contents.

DOCUMENT CHANGE RECORD

Release Date: 03/01/97

DOCUMENT TITLE	DOCUMENT NUMBER	REVISION	DATED
Axial SI to OTA & SSM Interface Control Document	ST-ICD-02	E	29 June 84

CHANGE (DATE)	TO INCORPORATE THE CHANGE INTO THE DOCUMENT: 1. ADD PAGES	2. REMOVE PAGES	OTHER COMMENTS REGARDING THIS CHANGE (AUTH., INSTR)
IRN 107 (24 March 1995)	iih, xia, 10.6-1, 10.6-16 - 10.6-18, 10.7-1, 10.7-2	xia, 10.6-1	(PIRN 2251) Incorporate COSTAR Stray Light Waiver into ST-ICD-02. HSTP CCR #3887. HSTP CCB Minutes #425, approved 11/12/93. (PIRN 2253R1) Incorporate STIS Weight Waiver into ST-ICD-02. HSTP CCR #4099. HSTP CCB Minutes #454, approved 3/24/95.
IRN 108 (30 June 1995)	iih, xia, 10.8-1, 10.8-2 10.8-3, 10.8-4	iih, xia	(PIRN 2255) Incorporate NICMOS Weight Deviation into ST-ICD-02. HSTP CCR #4158. HSTP CCB Minutes #460.
IRN 109 (14 July 1995)	iih, xia, 10.8-1, 10.8-5 10.8-6	iih, xia, 10.8-1	(PIRN 2256R1) Incorporate NICMOS Power Deviation into ST-ICD-02. HSTP CCR# 4159. HSTP CCB Minutes #461.
IRN 110 (08 Sept. 1995)	iih, xia, 10.7-1, 10.7-3 10.7-4, 10.7-5, 10.7-6, 10.7-7, 10.7-8, 10.7-9	iih, xia, 10.7-1	(PIRN 2254R2) Incorporate STIS Power Waiver into ST-ICD-02. HSTP CCR# 4102R1. HSTP CCB Minutes #464.
IRN 111 (06 Dec. 1996)	iih, xia, 10.7-1, 10.7-10 thru 10.7-64	iih, xia, 10.7-1	(PIRN 2257R1) Incorporate STIS Radiated EMI/EMC Testing Waiver into ST-ICD-02. HSTP CCR# 4373R1. (PIRN 2258R1) Incorporate STIS Envelope Waiver into ST-ICD-02. HSTP CCR# 4375. HSTP CCB Minutes #490.

NOTE: After revising the document, file this sheet in document preceeding table of contents.

DOCUMENT CHANGE RECORD

Release Date: 11/19/97

DOCUMENT TITLE	DOCUMENT NUMBER	REVISION	DATED
Axial SI to OTA & SSM Interface Control Document	ST-ICD-02	E	29 June 84

CHANGE (DATE)	TO INCORPORATE THE CHANGE INTO THE DOCUMENT: 1. ADD PAGES	2. REMOVE PAGES	OTHER COMMENTS REGARDING THIS CHANGE(AUTH.,INSTR)
IRN 112 (18 December 1996)	iij, xia, 10.8-1, 10.8-7 - 10.8-61	xia, 10.8-1	(PIRN 2259) Incorporate NICMOS Radiated Emissions Waiver into ST-ICD-02. HSTP CCR #4390. HSTP CCB Minutes #491, approved 12/18/96. (PIRN 2260R1) Incorporate NICMOS Guide Block Metrology Waiver into ST-ICD-02. HSTP CCR #4391. HSTP CCB Minutes #491, approved 12/18/96. (PIRN 2261R1) Incorporate NICMOS Lateral Stiffness Waiver into ST-ICD-02. HSTP CCR #4392. HSTP CCB Minutes #491, approved 12/18/96.
IRN 113 (24 January 1997)	iij, xia, 10.7-1, 10.7-65, 10.7-66, 10.7-67. 10.8-1, 10.8-62 - 10.8-65	iij, xia, 10.7-1 10.8-1	(PIRN 2262) Incorporate NICMOS Revised Weight Deviation into ST-ICD-02. HSTP CCR #4424. HSTP CCB Minutes #493, approved 1/13/97. (PIRN 2263) Incorporate STIS Revised Weight Waiver into ST-ICD-02. HSTP CCR #4425. HSTP CCB Minutes #493, approved 1/13/97. (PIRN 2264) Incorporate STIS Aft Bulkhead Temperature Waiver into ST-ICD-02. HSTP CCR #4429. HSTP CCB Minutes #493, approved 1/24/97.

NOTE: After revising the document, file this sheet in document preceeding table of contents.

DOCUMENT CHANGE RECORD

Release Date: 10/08/99

DOCUMENT TITLE	DOCUMENT NUMBER	REVISION	DATED
Axial SI to OTA & SSM Interface Control Document	ST-ICD-02	E	29 June 84

CHANGE (DATE)	TO INCORPORATE THE CHANGE INTO THE DOCUMENT: 1. ADD PAGES	2. REMOVE PAGES	OTHER COMMENTS REGARDING THIS CHANGE(AUTH.,INSTR)
IRN 114 (31 October 1997)	iik, xia, 10.9-1 - 10.9-7	xia	(PIRN 2265) Incorporate ACS Weight Waiver into ST-ICD-02. HSTP CCR #4497. HSTP CCB Minutes #504, approved 10/31/97. (PIRN 2266) Incorporate ACS Power Waiver into ST-ICD-02. HSTP CCR #4498. HSTP CCB Minutes #504, approved 10/31/97.
IRN 115 (14 November 1997)	iik, xia, xii, xiii, 10.9-1, 10.9-8 - 10.9-13	iik, xia, xii, xiii 10.9-1	(PIRN 2267) Incorporate ACS Enclosure Envelope Waiver into ST-ICD-02. HSTP CCR# 4499. HSTP CCB Minutes #505, approved 11/14/97.
IRN 116 (27 February 1998)	iik, xia, 10.9-1, 10.9-14 - 10.9-23	iik, xia, 10.9-1	(PIRN 2268) Incorporate ACS Connector Keyway Alignment Deviation into ST-ICD-02. HSTP CCR# 4544. HSTP CCB Minutes #509, approved 02/27/98.
IRN 117 (11 December 1998)	iik, viia, viic, ixa, xii, xiii, 1.1-2, 4.2-1, 4.3-2, 4.3-4, 4.3-5, 4.3-12, 4.3-13, 4.3-14, 4.3-15, 4.3-16, 4.3-17, 4.3-25, 4.3-28, 4.5-7, 4.6-16, 4.6-21, 4.7-3, 4.7-9, 4.11-3	iik, viia, viic, ixa, xii, xiii 1.1-2, 4.2-1, 4.3-2, 4.3-4, 4.3-5 4.3-12, 4.3-13, 4.3-14, 4.3-15, 4.3-16, 4.3-17, 4.3-25, 4.3-28, 4.5-7, 4.6-16, 4.7-3, 4.7-9, 4.11-3	(PIRN 2269) Incorporate Misc. Updates into ST-ICD-02. HSTP CCR# 4597. HSTP CCB Minutes #521, approved 12/11/98.

NOTE: After revising the document, file this sheet in document preceeding table of contents.

DOCUMENT CHANGE RECORD

Release Date: 11/20/01

DOCUMENT TITLE	DOCUMENT NUMBER	REVISION	DATED
Axial SI to OTA & SSM Interface Control Document	ST-ICD-02	E	29 June 84

CHANGE (DATE)	TO INCORPORATE THE CHANGE INTO THE DOCUMENT: 1. ADD PAGES	2. REMOVE PAGES	OTHER COMMENTS REGARDING THIS CHANGE(AUTH.,INSTR)
IRN 118 (25 June 1999)	iil, xia, 10.9-1, 10.9-24, 10.9-25, 10.9-26	xia, 10.9-1	(PIRN 2271) Incorporate ACS SI Latch Magnetic Field Exceedance Waiver into ST-ICD-02. HSTP CCR# 4637. HSTP CCB Minutes #529, approved 06/25/99.
IRN 119 (05 May 2000)	iil, xia, 10.10-1, 10.10-2	iil, xia	(PIRN 2273) Incorporate COS Weight Waiver into ST-ICD-02. HSTP CCR# 4744. HSTP CCB Minutes #541, approved 05/05/00.
IRN 120 (10 August 2001)	iil, xia, 10.9-1, 10.9-27, 10.9-28, 10.9-29, 10.9-30, 10.9-31, 10.9-32, 10.9-33	iil, xia, 10.9-1	(PIRN 2276R1) Incorporate ACS "C" Fitting Orientation Waiver into ST-ICD-02. HSTP CCR# 4848. HSTP CCB Minutes #562, approved 08/10/01.
IRN 121 (21 Sept. 2001)	iil, xia, 10.10-1, 10.10-3, 10.10-4, 10.10-5, 10.10-6, 10.10-7, 10.10-8	iil, xia, 10.10-1	(PIRN 2272R1) Incorporate COS Power Waiver into ST-ICD-02. HSTP CCR# 4742R1. HSTP CCB Minutes #564, approved 09/21/01.
IRN 122 (19 Oct. 2001)	iil, xia, xib, 10.9-1, 10.9-34, 10.9-35	iil, xia, 10.9-1,	(PIRN 2277R1) Incorporate ACS Guide Blocks - Forward and Aft Waiver into ST-ICD-02. HSTP CCR# 4877. HSTP CCB Minutes #566, Approved 10/19/01.

NOTE: After revising the document, file this sheet in document preceeding table of contents.

DOCUMENT CHANGE RECORD

Release Date: 05/21/03

DOCUMENT TITLE	DOCUMENT NUMBER	REVISION	DATED
Axial SI to OTA & SSM Interface Control Document	ST-ICD-02	E	29 June 84

CHANGE (DATE)	TO INCORPORATE THE CHANGE INTO THE DOCUMENT: 1. ADD PAGES	2. REMOVE PAGES	OTHER COMMENTS REGARDING THIS CHANGE(AUTH.,INSTR)
IRN 123 (16 Nov. 2001)	iim, xia, xib, 10.9-1, 10.9-36, 10.9-37, 10.9-38, 10.9-39, 10.9-40, 10.9-41, 10.9-42, 10.9-43, 10.9-44, 10.9-45	xia, xib, 10.9-1	(PIRN 2270R3) Incorporate ACS Axial ORI Static Envelope Exceedance Waiver into ST-ICD-02. HSTP CCR# 4598R2. HSTP CCB Minutes #567, approved 11/16/01. (PIRN 2279) Incorporate ACS Inrush Current Exceedance Waiver into ST-ICD-02. HSTP CCR# 4888. HSTP CCB Minutes #567, Approved 11/16/01.
IRN 124 (03 Dec. 2001)	iim, xib, 10.9-1, 10.9-46, 10.9-47, 10.9-48, 10.9-49, 10.9-50, 10.9-51	iim, xib, 10.9-1	(PIRN 2278R1) Incorporate ACS EMI/EMC Waiver into ST-ICD-02. HSTP CCR# 4887. HSTP CCB Minutes# 568, approved 12/03/01.
IRN 125 (08 Feb. 2002)	iim, xib, 10.10-1, 10.10-9, 10.10-10, 10.10-11, 10.10-12	iim, xib, 10.10-1	(PIRN 2274R1) Incorporate COS Static Envelope Waiver into ST-ICD-02. HSTP CCR# 4753R1, HSTP CCB Minutes# 572, approved 02/08/02.
IRN 126 (02 Aug. 2002)	iim, xib, 10.10-1, 10.10-13	iim, xib, 10.10-1	(PIRN 2275R1) Incorporate COS Weight Waiver into ST-ICD-02. HSTP CCR# 4844R1, HSTP CCB Minutes# 576, approved 08/02/02.

NOTE: After revising the document, file this sheet in document preceeding table of contents.

TABLE OF CONTENTS

Section	Page
1.0 SCOPE	1.1-1
1.1 Purpose	1.1-1
1.2 Organization	1.1-1
1.3 Content Status	1.1-1
1.4 ICD Change Procedure	1.1-1
2.0 APPLICABLE DOCUMENTS	2.1-1
2.1 Government Documents	2.1-1
2.2 Non Government Documents	2.1-1
2.2.1 SI Documents	2.1-1
3.0 REQUIREMENTS	3.1-1
3.1 Interface Functions	3.1-1
3.1.1 OTA	3.1-1
3.1.2 SSM	3.1-1
3.2 General Interface Characteristics	3.2-1
3.2.1 Interfaces	3.2-1
3.2.2 Coordinate Systems	3.2-1
3.2.2.1 Axial SI Coordinate System	3.2-1
3.3 Mechanical Interfaces	3.3-1
3.3.1 SI Envelope	3.3-1
3.3.2 Mounting Points and Constraints	3.3-1
3.3.2.1 Mount Point Fitting Interfaces	3.3-4
3.3.3 Guiderail/Interface	3.3-4
3.3.4 Ground Handling Interface	3.3-15
3.3.5 Space Support Equipment Interface	3.3-15
3.3.6 EV Crewmember Handholds	3.3-15

TABLE OF CONTENTS (Continued)

Section		Page
3.3.7	Alignment	3.3-19
	3.3.7.1 Alignment of SI's Within the OTA	3.3-19
	3.3.7.2 Short Term Stability of OTA/SI Alignment	3.3-19a IRN 71
	3.3.7.3 Long Term Stability of OTA/SI Alignment	3.3-20
3.3.8	Orbit Removal and Installation	3.3-20
	3.3.8.1 Crew and SI Safety During Change Out	3.3-20
3.3.9	Electrical Connector Locations	3.3-21
	3.3.9.1 Ground Strap Location	3.3-21
3.3.10	SI Accessibility	3.3-21
3.3.11	Venting, Pressurization and Purge	3.3-21
3.3.12	Cryogenic Venting	3.3-22
3.4	Optical Interfaces	3.4-1
3.4.1	Optical Throughput	3.4-1
3.4.2	Pupil Properties	3.4-2
3.4.3	Focal Plane Properties	3.4-2
3.4.4	Stray Light	3.4-2
	3.4.4.1 Aft Shroud Light Leak Environment	3.4-2
3.5	Structural Interface	3.5-1
3.5.1	Loads	3.5-1
	3.5.1.1 Ground Handling Loads	3.5-1
	3.5.1.2 SI Latching Loads	3.5-1
	3.5.1.3 Ground Transportation Loads	3.5-1
	3.5.1.4 Liftoff and Landing Overall Load Factors	3.5-1
	3.5.1.5 Emergency Landing Overall Load Factors	3.5-3
	3.5.1.6 Random Mechanical Vibration	3.5-3
	3.5.1.7 Acoustic Loads	3.5-3
	3.5.1.8 In-Orbit Loads	3.5-3
	3.5.1.8.1 Maximum EV Crewmember Applied Loads on Handholds/Equipment Tethers	3.5-3

LMSC RELEASED CONTROLLED

(Supersedes pg. iv dated 29 June 1984 caused by overflow due to IRN 71)

TABLE OF CONTENTS (Continued)

Section		Page
3.5.1.8.2	SI Guide Rail Loads	3.5-3
3.5.1.8.3	Connector Loads	3.5-3
3.5.2	Structural Characteristics	3.5-6
3.5.2.1	SI Attachment Flexibility	3.5-6
3.5.3	Mass Properties	3.5-8
3.5.3.1	Weight	3.5-8
3.5.3.2	Center of Gravity	3.5-8
3.6	Environmental Interface	3.6-1
3.6.1	Thermal Interfaces	3.6-1
3.6.1.1	Operational Thermal Interface	3.6-1
3.6.1.1.1	Mount Point Conductance	3.6-1
3.6.1.1.2	Electrical Cable, Ground Strap and Purge Line Conductances	3.6-1
3.6.1.1.3	Radiative Heat Transfer	3.6-2
3.6.1.1.3.1	Obscurations and Surface Characteristics	3.6-2
3.6.1.1.3.2	Effective Sink Temperatures	3.6-2
3.6.1.1.4	Thermal Power	3.6-7
3.6.1.1.4.1	Thermal Power Mode Definitions	3.6-7
3.6.1.1.4.2	Thermal Power Mode Constraints	3.6-7
3.6.1.1.4.3	Normal Science Mission Thermal Power Configuration	3.6-8
3.6.1.2	Non-Operational Thermal Interfaces	3.6-8
3.6.1.2.1	Pre-Flight	3.6-8
3.6.1.2.1.1	Transportation and Storage	3.6-8
3.6.1.2.1.2	Prelaunch and Ground Testing	3.6-8
3.6.1.2.2	Flight	3.6-8
3.6.1.2.2.1	Launch and Ascent	3.6-8
3.6.1.2.2.2	Initial Deployment	3.6-8

TABLE OF CONTENTS (Continued)

Section		Page
	3.6.1.2.2.3 Retrieval	3.6-10
	3.6.1.2.2.4 Scheduled Maintenance	3.6-10
	3.6.1.2.2.5 Safing	3.6-10
	3.6.1.2.2.6 Entry	3.6-11
	3.6.1.2.2.7 Post Landing	3.6-11
	3.6.1.3 Contingency Retrieval	3.6-11
3.6.2	Magnetic Environment	3.6-11
	3.6.2.1 Magnetic Fields	3.6-11
	3.6.2.2 SI Magnetic Field Intensity	3.6-11
	3.6.2.3 OTA Magnetic Field Intensity	3.6-14
3.6.3	Contamination Control	3.6-14
	3.6.3.1 Volumetric Cleanliness	3.6-14
	3.6.3.2 Surface Cleanliness	3.6-14
	3.6.3.3 Material Outgassing	3.6-14
3.6.4	Ionizing Particle Radiation	3.6-14
3.6.5	Meteoroid	3.6-14
3.6.6	SSM Pressure Environment and SI Differential Pressure	3.6-17 IRN 91
3.6.7	Humidity	3.6-17
3.7	Electrical Power	3.7-1
3.7.1	Power Buses	3.7-1
3.7.2	SI Interchangeability	3.7-1
3.7.3	Fusing	3.7-1
3.7.4	Switching	3.7-1
3.7.5	Operating Voltage	3.7-3
3.7.6	Bus Control Circuit	3.7-3
3.7.7	Section not used	3.7-3
3.7.8	Grounding of SIs to ST Structure	3.7-3
	3.7.8.1 Mount Point Fitting Resistance	3.7-4
	3.7.8.2 MultiLayer Insulation (MLI)	3.7-4

(Supersedes pg. vi, dated 29 June 1984)

TABLE OF CONTENTS (Continued)

LMSC RELEASED CONTROLLED

Section		Page
3.7.9	EMC	3.7-4
3.7.9.1	Dynamic Impedance	3.7-4
3.7.9.2	In-Rush Current	3.7-4
3.7.9.3	SI Generated Ripple & Noise	3.7-4
3.7.9.4	Ripple and Noise Susceptibility	3.7-10
3.7.9.5	Transient Susceptibility	3.7-10
3.7.9.6	Survival	3.7-10
3.7.9.7	Radiated Susceptibility (E-Field) (Peak Field Strengths)	3.7-10 IRN 76
3.7.9.8	Radiated Electric Field Emissions	3.7-10 IRN 70
3.8	Pointing Control	3.8-1
3.8.1	Fine Pointing	3.8-1
3.8.2	Modes I, II and III Target Acquisition and Verification	3.8-1
3.8.3	Scans	3.8-1
3.8.3.1	Linear Scan	3.8-1
3.8.3.2	Continuous Scan	3.8-1
3.8.3.3	Dwell Scan	3.8-3
3.8.3.4	Scan Control Parameters	3.8-3
3.8.3.5	Scan Times	3.8-3
3.8.3.6	Peak-Up Mode	3.8-7
3.8.4	Solar System Object Tracking	3.8-7
3.9	Maneuver Characteristics	3.9-1
3.10	Uncompensated Momentum	3.10-1
3.11	Interface Connectors and Pin Assignments	3.11-1
3.11.1	Connectors	3.11-1
3.11.2	Pin Assignments	3.11-1
3.12	SI Math Models	3.12-1
3.12.1	Structural Math Models	3.12-1
3.12.2	Thermal Math Models	3.12-1

(Supersedes pg. vii dated 20 November 1984)

TABLE OF CONTENTS

Section		Page	
4.0 ORI Requirements		4.1-1	IRN
4.1	Advanced Axial Scientific Instruments	4.1-1	100
4.2	General Interface Characteristics	4.2-1	
4.2.1	Interfaces	4.2-1	
4.2.2	Coordinate Systems	4.2-1	
4.2.2.1	Axial SI Coordinate System	4.2-1	
4.3	Mechanical Interfaces	4.3-1	
4.3.1	SI Envelope	4.3-1	
4.3.2	Mounting Points and Constraints	4.3-1	
4.3.2.1	Mount Point Fitting Interfaces	4.3-4	
4.3.3	Guiderail Interface	4.3-4	
4.3.4	Ground Handling Interface	4.3-18	
4.3.5	Space Support Equipment Interface	4.3-18	
4.3.6	EVA Handholds	4.3-18	IRN
4.3.7	Alignment	4.3-22	106
4.3.7.1	Alignment of SIs Within the OTA	4.3-22	IRN
4.3.7.2	Short term Stability of OTA/SI Alignment	4.3-22	100
4.3.7.3	Long term Stability of OTA/SI Alignment	4.3-23	
4.3.8	Orbit Removal And Installation	4.3-23	
4.3.8.1	Crew and SI Safety During Change-out	4.3-23	
4.3.9	Electrical Connector Locations	4.3-24	
4.3.9.1	Ground Strap Location	4.3-24	
4.3.10	Paragraph Deleted	4.3-24	
4.3.11	Venting Pressurization and Purge	4.3-24	
4.3.12	Cryogenic System	4.3-24	
4.3.12.1	Venting System	4.3-24	
4.3.12.2	Hold Time	4.3-25	
4.3.12.3	Lifetime	4.3-25	
4.3.12.4	Safety	4.3-25	
4.3.12.5	Light Leaks	4.3-25	
4.3.12.6	Angular Momentum	4.3-25	
4.3.12.7	Material Compatibility	4.3-25	
4.3.13	Aft Shroud Cooling System/NICMOS Cooling System	4.3-25	IRN 117
4.4	Optical Interfaces	4.4-1	IRN
4.4.1	Optical Throughput	4.4-3	100
4.4.2	Pupil Properties	4.4-3	
4.4.3	Focal Plane Properties	4.4-3	
4.4.4	Stray Light	4.4-3	
4.4.4.1	Aft Shroud Light Leak Environment	4.4-7	
4.5	Structural Interface	4.5-1	
4.5.1	Loads	4.5-1	
4.5.1.1	Ground Handling Loads	4.5-1	
4.5.1.2	SI Latching Loads	4.5-1	
4.5.1.3	Ground Transportation Loads	4.5-1	
4.5.1.4	Liftoff and Landing Overall Load Factors	4.5-1	
4.5.1.5	Emergency Landing Overall Load Factors	4.5-2	
4.5.1.6	Random Mechanical Vibration	4.5-2	
4.5.1.7	Acoustic Loads	4.5-2	

(Supersedes Page viia dated 24 March 1995)

TABLE OF CONTENTS (Continued)

Section		Page	
4.5.1.8	In Orbit Loads	4.5-2	IRN 100
4.5.1.8.1	Maximum EV Crewmember Applied Loads on Handholds & Equipment Tethers	4.5-2	
4.5.1.8.2	SI Guiderail Loads	4.5-2	
4.5.1.8.3	Connector Loads	4.5-2	
4.5.2	Structural Characteristics	4.5-4	
4.5.2.1	SI/OTA Latch Flexibility	4.5-4	
4.5.3	Mass Properties	4.5-6	
4.5.3.1	Weight	4.5-6	
4.5.3.2	Center of Gravity	4.5-7	
4.6	Environmental Interface	4.6-1	
4.6.1	Thermal Interfaces	4.6-1	
4.6.1.1	Operational Thermal Interface	4.6-1	
4.6.1.1.1	Mount Point Conductance	4.6-1	
4.6.1.1.2	Electrical Cable, Ground Strap, Vent Line and Purge Line Conductances	4.6-2	
4.6.1.1.3	Radiative Heat Transfer	4.6-4	
4.6.1.1.3.1	Obscurations and Surface Characteristics	4.6-4	
4.6.1.1.3.2	Effective Sink Temperatures	4.6-4	
4.6.1.1.4	Thermal Power	4.6-10	
4.6.1.1.4.1	Thermal Power Mode Definitions	4.6-10	
4.6.1.1.4.2	Thermal Power Mode Constraints	4.6-10	
4.6.1.1.4.3	Normal Science Mission Thermal Power Configuration	4.6-10	
4.6.1.2	Non-Operational Thermal Interfaces	4.6-11	
4.6.1.2.1	Pre-Flight	4.6-11	
4.6.1.2.1.1	Transportation and Storage	4.6-11	
4.6.1.2.1.2	Pre-Launch and Ground Testing	4.6-11	
4.6.1.2.2	Flight	4.6-11	
4.6.1.2.2.1	Launch and Ascent	4.6-11	
4.6.1.2.2.2	Deployment	4.6-11	
4.6.1.2.2.3	Retrieval	4.6-11a	IRN 106
4.6.1.2.2.4	Scheduled Maintenance	4.6-12	
4.6.1.2.2.5	Safing	4.6-12	IRN 100
4.6.1.2.2.6	Entry	4.6-12	
4.6.1.2.2.7	Post Landing	4.6-12	
4.6.1.3	Contingency Retrieval	4.6-12	
4.6.2	Magnetic Environment	4.6-13	
4.6.2.1	Magnetic Fields	4.6-13	
4.6.2.2	SSM and SI Magnetic Field Intensity	4.6-13	
4.6.2.3	OTA Magnetic Field Intensity	4.6-13	
4.6.2.4	Magnetic Induction Field	4.6-13	IRN 106
4.6.3	Contamination Control	4.6-16	
4.6.3.1	Volumetric Cleanliness	4.6-16	
4.6.3.2	Surface Cleanliness	4.6-16	
4.6.3.3	Material Outgassing	4.6-16	

(Supersedes Page viib dated 29 May 1992)

TABLE OF CONTENTS (Continued)

Section		Page	
4.6.4	Ionizing Particle Radiation	4.6-16	IRN 100
4.6.4.1	Galactic Cosmic Environment	4.6-16	IRN 117
4.6.5	Meteriod	4.6-19	IRN
4.6.6	Pressure Environment and SI Differential Pressure	4.6-19	100
4.6.7	Humidity	4.6-19	
4.7	Electrical Power	4.7-1	
4.7.1	Power Buses	4.7-1	
4.7.2	SI Interchangeability	4.7-2	
4.7.3	Fusing	4.7-2	
4.7.4	Switching	4.7-2	
4.7.5	Operating Voltage	4.7-2	
4.7.6	Bus Control Circuit	4.7-2	
4.7.7	Section not used	4.7-2	
4.7.8	Ground of SIs to HST Structure	4.7-3	
4.7.8.1	Mount Point Fitting Resistance	4.7-3	
4.7.8.2	Multi-Layer Insulation (MLI)	4.7-3	
4.7.8.2.1	Non Conductive Surfaces	4.7-3	
4.7.9	EMC	4.7-5	
4.7.9.1	Dynamic Impedance	4.7-5	
4.7.9.2	In-Rush Current	4.7-5	
4.7.9.3	SI Generated Ripple & Noise	4.7-7	
4.7.9.4	Ripple and Noise Susceptibility	4.7-7	
4.7.9.5	Transient Susceptibility	4.7-8	
4.7.9.6	Survival	4.7-8	
4.7.9.7	Radiated Susceptibility (E-Field) (Peak Field Strengths)	4.7-8	
4.7.9.8	Radiated Electric Field Emissions	4.7-9	
4.7.9.9	Return System DC Offsets	4.7-9	
4.8	Pointing Control	4.8-1	
4.8.1	Fine Pointing	4.8-1	
4.8.2	Modes I, II & III Target Acquisition and Verification	4.8-1	
4.8.3	Scans	4.8-1	
4.8.3.1	Linear Scan	4.8-1	
4.8.3.2	Continuous Scan	4.8-1a	IRN
4.8.3.3	Dwell Scan	4.8-2	106
4.8.3.4	Scan Control Parameters	4.8-2	IRN
4.8.3.5	Scan Times	4.8-3	100
4.8.3.6	Peak-up Mode	4.8-5	
4.8.4	Solar System Object Tracking	4.8-5	
4.9	Maneuver Characteristics	4.9-1	
4.10	Alignment Stability of SIs/Uncompensated Momentum	4.10-1	IRN
4.11	Interface Connectors and Pin Assignments	4.11-1	
4.11.1	Connectors	4.11-1	106
4.11.2	Pin Assignments	4.11-1	IRN
4.12	SI Math Models	4.12-1	100
4.12.1	Structural Math Models	4.12-1	
4.12.2	Thermal Math Models	4.12-1	

(Supersedes Page viic dated 24 March 1995)

TABLE OF CONTENTS (Continued)

List of Figures

LMSC RELEASED CONTROLLED

		Page
3.2-1	Axial SI Coordinate System	3.2-2
3.3-1	Static Envelope	3.3-2
3.3-2	Dynamic Envelope	3.3-3
3.3-3	Mount Point Interface 'A'	3.3-5
3.3-4	Mount Point Fitting 'A' SI Half	3.3-6
3.3-5	Mount Point Interface 'B'	3.3-7
3.3-6	Mount Point Fitting 'B' SI Half	3.3-8
3.3-7	Mount Point Interface 'C'	3.3-9
3.3-8	Mount Point Fitting 'C' SI Half	3.3-10
3.3-9	Guiderails Interface Envelope	3.3-11
3.3-10	Forward Guiderail Interface	3.3-12
3.3-11	Forward Guiderail Mounting Pads	3.3-13
3.3-12	Rear Guiderail Interface and Pad Area	3.3-14
3.3-13	SI/GSE Interface	3.3-16
3.3-14	SI/SSE Handhold Interface	3.3-17
3.3-15	SI Handhold and Minimum Clearance	3.3-18
3.3-16	Axial SI Electrical Envelope for Connector and Purge Fitting Arrangement	3.3-23
3.3-17	Connector and Purge Fitting Arrangement Details	3.3-24
3.3-18	Axial SI Vent Locations	3.3-25
3.4-1	OTA Entrance Pupil	3.4-3
3.4-2	Field Curvature Characteristics	3.4-4
3.4-3	Field Curvature and Astigmatism	3.4-5
3.5-1	Mechanical Random Vibration Criteria at OTA/SI Interface	3.5-4
3.5-2	Axial SI Acoustic Levels During Ascent	3.5-5
3.5-3	SI Generalized Mass vs. SI Mode Frequency	3.5-7
3.6-1	OTA FPS Thermal Configuration	3.6-3
3.6-2	Exterior Surface Temperatures and Properties	3.6-4
3.6-3	Effective Sink Temperature (C°) Distribution - Non Applicable to FOC	3.6-6

IRN 098

(SUPERSEDES PAGE viii DATED 29 JUNE 1984)

TABLE OF CONTENTS (Continued)

List of Figures		Page	
3.6-4	Time Varying Magnetic Field at Axial SI in Gauss	3.6-12	
3.6-5	Fixed Magnetic Field at Axial SI in Gauss	3.6-13	
3.6-6	Particle Size Distribution Curves	3.6-15	IRN
3.6-6A	Aft Shroud Orbital Pressure Profile	3.6-17a	91
3.6-7	Maximum SI Wall Differential Pressure Versus a Ratio of Vent Area to Volume	3.6-18	
3.7-1	Typical SSM/OTA/SI Power Interface	3.7-2	
3.7-2	ST Power Dynamic Impedance at SI Connector	3.7-5	
3.7-3	In-Rusn Time Current Profile	3.7-6	
3.7-4	Allowable SI Generated Ripple and Noise Limits	3.7-7	
3.7-5	SI Equipment Ripple and Noise Susceptibility	3.7-8	
3.7-6	Transient Susceptibility Test Waveforms	3.7-9	
3.7-7	Limit for RE02 Narrow Band Radiated Emission	3.7-11	IRN
3.7-8	Limit for RE02 Broad Band Radiated Emission	3.7-12	70
3.8-1	Pointing Accuracy and Stability During Scans	3.8-2	
3.8-2	Scan Patterns	3.8-4	
3.8-3	Maneuver Time Required to Limit Rate to 0.21 arc sec/sec	3.8-5	
3.8-4	Preliminary Small-Angle Maneuver Criteria	3.8-6	
3.9-1	Maneuver Time Profile	3.9-2	
4.2-1	Axial ORI Coordinate System (Item Deleted)	4.2-2	IRN
4.3-1	Axial ORI Static Envelope	4.3-2	106
4.3-2	Axial ORI Dynamic Envelope	4.3-3	IRN
4.3-3	ORI Mount Point Interface "A"	4.3-6	100
4.3-4	ORI Mount Point Fitting "A" SI Half	4.3-7	
4.3-5	ORI Mount Point Interface "B"	4.3-8	
4.3-6	ORI Mount Point Fitting "B" SI Half	4.3-9	
4.3-7	ORI Mount Point Interface "C"	4.3-10	
4.3-8	ORI Mount Point Fitting "C" SI Half	4.3-11	
4.3-9	ORI Guide Block & Strip Interface Envelope	4.3-12	
4.3-10	ORI Forward Guide Block Interface	4.3-13	
4.3-11	ORI Forward Guide Block Interface & Envelope	4.3-14	
4.3-12	ORI Aft Guide Strip Interface	4.3-15	
4.3-13	ORI Guide Block & Guide Strip Interface To Focal Plane Structure For Bays 1 & 3	4.3-16	
4.3-13a	ORI Guide Block & Guide Strip Interface To Focal Plane Structure For Bays 2 & 4	4.3-17	

(Supersedes page ix dated 29 May 1992)

TABLE OF CONTENTS (Continued)

List of Figures		Page	
4.3-14	ORI SI/GSE Interface	4.3-19	IRN
4.3-15a	SM-1 EVA Handhold Interface	4.3-20	106
4.3-15b	SM-2 EVA Handhold Interface	4.3-20a	
4.3-16	ORI SI Handhold And Minimum Clearances	4.3-21	
4.3-17	ORI Electrical Connector And Purge Fitting Arrangement	4.3-26	
4.3-18	ORI Connector And Purge Fitting Details	4.3-27	
4.3-19	ORI Vent Locations	4.3-28	
4.3-20	Aft Shroud Cryogenic Vent Locations	4.3-29	
4.3-21	Cryogenic Vent Port Details	4.3-30	
4.4-1	Position of Paraxial Focus and Maximum Encircled Energy for the As-Built HST	4.4-2	IRN
4.4-2	OTA Nominal Spectral Throughput (2000 - 11000 Å)	4.4-4	105
4.4-3	OTA Nominal Spectral Throughput (1000 - 2000 Å)	4.4-5	106
4.4-4	OTA Entrance Pupil	4.4-6	
4.4-5	HST Focal Plane Format	4.4-6a	
4.4-6	0% Vignetting of OTA Focal Plan for -V3 Axis	4.4-6b	
4.4-7	Field Curvature Characteristics	4.4-6c	
4.4-8	Space Telescope Straylight Design	4.4-6e	
4.5-1	Mechanical Random Vibration at SIPE/SI Interface	4.5-3	
4.5-2	Axial SI Acoustic Levels During Ascent	4.5-3	
4.5-3	SI Generalized Mass Vs SI Mode Frequency	4.5-5	
4.5-4	Maximum Allowable SI Weight vs CG Position	4.5-7	
4.6-1	OTA FPS Thermal Configuration	4.6-3	
4.6-1a	Mount Point Interfaces	4.6-5	
4.6-1b	Ground Strap And Electrical Cable Interface	4.6-5	
4.6-1c	Forward Bulkhead Interface	4.6-6	
4.6-1d	Controlled Barrier Interface	4.6-6	
4.6-1e	Uncontrolled Barrier Interface	4.6-1	
4.6-1f	Aft Bulkhead Interface	4 6-7	
4.6-2	ORI Exterior Surface Temperature and Properties	4.6-8	
4.6-3	Effective Sink Temperature (°C) Distribution Non Applicable to FOC	4.6-9	
4.6-4	Time Varying Magnetic Field at Axial SI in Gauss	4.6-14	
4.6-5	Fixed Magnetic Field at Axial SI in Gauss	4.6-15	
4.6-6	Particle Size Distribution Curves	4.6-17	
4.6-7	Maximum SI Wall Differential Pressure Versus a Ratio of Vent Area to Volume	4.6-20	
4.6-8	Galactic Cosmic Environment	4.6-21	IRN
4.7-1	Typical SSM/OTA/SI Power Interface	4.7-1	117
4.7-2	ORI Non-Conductive Surfaces	4.7-4	
4.7-3	HST Power Dynamic Impedence at SI Connector	4.7-5	
4.7-4	In-rush Time Current Profile	4.7-6	
4.7-5	SI Generated Ripple and Noise Limits	4.7-6	
4.7-6	SI Equipment Ripple and Noise Susceptibility	4.7-7	
4.7-7	Transient Susceptibility Test Waveforms	4.7-9	
4.7-8	Limit for RE02 Narrow Band Radiated Emission	4.7-10	
4.7-9	Limit for REO2 Broad Band Radiated Emission	4.7-11	
4.8-1	Pointing Accuracy and Stability During Scans	4.8-2	
4.8-2	Scan Patterns	4.8-3	
4.8-3	Maneuver Time Required to Limit Rate to 0.21 arc-sec/sec	4.8-4	
4.8-4	Preliminary Small-Angle Maneuver Criteria	4.8-4	
4.9-1	Maneuver Time Profile	4.9-1	

TABLE OF CONTENTS (Continued)

List of Tables		Page	
1.4-1	TBR List	1.1-4	
3.5-1	LOAD FACTOR (g's) AXIAL SCIENTIFIC INSTRUMENTS	3.5.2	
3.6-1	MAXIMUM INTERNAL IONIZING PARTICLE RADIATION-AFT SHROUD	3.6-16	
3.7-1	CIRCUIT PROTECTION	3.7-3	
3.11-1	POWER CONNECTOR "A"	3.11-2	
3.11-2	POWER CONNECTOR "B"	3.11-3	
3.11-3	SIGNAL/COMMAND "A" CONNECTOR	3.11-4	
3.11-4	SIGNAL/COMMAND "B" CONNECTOR	3.11-5	IRN
4.0-1	TBR LIST	1.1-2	100
4.4-1	OTA MECHANICAL ELEMENT LOCATIONS AND UNCERTAINTIES	4.4-3	IRN
4.4-2	FIELD CURVATURE AND ASTIGMATISM	4.4-6d	106
4.5-1	LOAD FACTORS (G's) AXIAL SCIENTIFIC INSTRUMENTS	4.5-2	IRN
4.6-1	MAXIMUM INTERNAL IONIZING PARTICLE RADIATION AFT SHROUD	4.6-18	100
4.7-1	CIRCUIT PROTECTION	4.7-2	
4.11-1	POWER CONNECTOR "A"	4.11-2	IRN
4.11-2	POWER CONNECTOR "B"	4.11-3	106
4.11-3	SIGNAL/COMMAND "A" CONNECTOR	4.11-4	
4.11-4	SIGNAL/COMMAND "B" CONNECTOR	4.11-5	
10	APPENDIX	10.1-1	
10.1	FOS Deviations and Waivers	10.1-1	
	10.1.1 Deviation No. FOS-003	10.1-2	
	10.1.2 Deviation No. FOS-004	10.1-4	
	10.1.3 Deviation No. FOS-007	10.1-6	
	10.1.4 Deviation No. FOS-008	10.1-7	
	10.1.5 Deviation No. FOS-010R1	10.1-8	
	10.1.6 Deviation No. FOS-019	10.1-11	
	10.1.7 Deviation No. FOS-022	10.1-12	
	10.1.8 Deviation No. FOS-024	10.1-13	IRN
	10.1.9 Deviation No. FOS-007C	10.1-14	72
	10.1.10 Deviation No. FOS-004A	10.1-16	75
	10.1.11 Deviation No. FOS-029	10.1-18	80
	10.1.12 Deviation No. FOS-023C	10.1-21	IRN 86
10.2	HRS Deviations and Waivers	10.2-1	
	10.2.1 Waiver No. HRS-001	10.2-2	Admin
	10.2.2 Waiver NO. HRS-004R1	10.2-3	Change
	10.2.3 Waiver No. HRS-017	10.2-5	IRN
	10.2.4 Waiver No. WR-HRS-023R2	10.2-7	78
	10.2.5 Waiver No. WR-HRS-022	10.2-9	87
	10.2.6 Waiver No. RK-W-001A	10.2-10	101
	10.2.7 Waiver No. RK-W-002	10.2-14	104

TABLE OF CONTENTS (Continued)

Appendix		Page	
10.3	FOC Deviations and Waivers	10.3-1	Admin. Changes
	10.3.1 Deviation No. DS-002	10.3-3	
	10.3.2 Deviation No. DS-004	10.3-5	
	10.3.3 Deviation No. FOC-002	10.3-6	
	10.3.4 Deviation No. FOC-006	10.3-7	
	10.3.5 Deviation No. DS-006	10.3-8	
	10.3.6 Deviation No. FOC-008	10.3-9	
	10.3.7 Deviation No. DS-001R2	10.3-11	
	10.3.8 Deviation No. FOC-005R2	10.3-13	
	10.3.9 Deviation No. DS-007	10.3-14	
	10.3.10 Deviation No. DS-005R1	10.3-17	
	10.3.11 Deviation No. DS-003R2	10.3-19	
	10.3.12 Deviation No. DS-007R1	10.3-22	IRN 63
	10.3.13 Deviation No. FOC-011	10.3-25	73
	10.3.14 Deviation No. FOC-001R1	10.3-27	74
	10.3.15 Deviation No. FOC-015	10.3-28	79
	10.3.16 Deviation No. FOC-016	10.3-31	93
	10.3.17 Deviation No. FOC-017	10.3-32	94
10.4	HSP Deviations and Waivers	10.4-1	
	10.4.1 Deviation No. HSP-001	10.4-2	
	10.4.2 Deviation No. HSP-002	10.4-4	IRN 76
	10.4.3 (No Waiver number assigned)	10.4-5	88
	10.4.4 Deviation No. HSP-003	10.4.6	95
10.5	STAR Deviations & Waivers	10.5-1	IRN 82
	10.5.1 (No Deviation number assigned)	10.5-2	
	10.5.2 (No Deviation number assigned)	10.5-4	83
	10.5.3 (No Deviation number assigned)	10.5-6	IRN 89

TABLE OF CONTENTS (Continued)

Appendix			Page	
10.6	COSTAR Deviations & Waivers		10.6-1	IRN
	10.6.1	COSTAR Exterior Surface Properties Waiver COS-W-001	10.6-2	102
	10.6.2	EMI Testing, W0009	10.6-5	IRN
	10.6.3	Magnetized Track, W0010	10.6-7	103
	10.6.4	Thermal Power Mode Constraints, W0011	10.6-9	
	10.6.5	COSTAR Envelope Violations, W0015	10.6-10	
	10.6.6	Infrared Background, W0017	10.6-12	
	10.6.7	SI Static Envelope Violation, W0018	10.6-13	
	10.6.8	Unused Science Interface, W0019	10.6-15	
	10.6.9	Stray Light Waiver, W0021A	10.6-16	IRN 107
10.7	STIS Deviations & Waivers		10.7-1	IRN
	10.7.1	STIS Weight Waiver, IN0037-W-006	10.7-2	107
	10.7.2	STIS Power Waiver, IN0037-W-005A	10.7-3	IRN 110
	10.7.3	STIS Radiated EMI/EMC Testing Waiver, IN0037-W-017A	10.7-10	IRN 111
	10.7.4	STIS Envelope Waiver, IN0037-W-020	10.7-15	
	10.7.5	STIS Aft Bulkhead Temperature Waiver, IN0037-W-026	10.7-65	IRN 113
	10.7.6	STIS Revised Weight Waiver, STIS-W-001	10.7-66	
10.8	NICMOS Deviations & Waivers		10.8-1	IRN
	10.8.1	NICMOS Weight Waiver, IN0048-D-004	10.8-2	108
	10.8.2	NICMOS Power Deviation, IN0048-D-005	10.8-5	IRN 109
	10.8.3	NICMOS Radiated Emissions Waiver, IN0048-W-012	10.8-7	IRN 112
	10.8.4	NICMOS Guide Block Metrology Waiver, IN0048-W-013	10.8-24	
	10.8.5	NICMOS Lateral Stiffness Waiver, IN0048-W-016	10.8-61	
	10.8.6	NICMOS Revised Weight Deviation, IN0048-D-004A	10.8-62	IRN 113
10.9	ACS Deviations & Waivers		10.9-1	IRN
	10.9.1	ACS Weight Waiver, IN0077-W-003A	10.9-2	114
	10.9.2	ACS Power Waiver, IN0077-W-004	10.9-3	
	10.9.3	ACS Enclosure Envelope Waiver, IN0077-W-005	10.9-8	IRN 115
	10.9.4	ACS Connector Keyway Alignment Deviation, IN0077-D-001A	10.9-14	IRN 116
	10.9.5	ACS SI Latch Magnetic Field Exceedance Waiver, IN0077-W-016	10.9-24	IRN 118
	10.9.6	ACS "C" Fitting Orientation Waiver, IN0077-W-021B	10.9-27	IRN 120
	10.9.7	ACS Guide Blocks - Forward and Aft Waiver IN0077-W-022A	10.9-34	IRN 122
	10.9.8	ACS Axial ORI Static Envelope Exceedances Waiver, IN0077-W-015F	10.9-36	IRN 123

(This supersedes page xia dated 19 October 2001)

Appendix		Page	
10.9.9	ACS Inrush Current Exceedance Waiver, IN0077-W-023	10.9-38	IRN 123
10.9.10	ACS EMI/EMC Waiver, IN0077-W-020A	10.9-46	IRN 124
10.10	COS Deviations & Waivers	10.10-1	IRN
10.10.1	COS Weight Waiver, IN0090-W-007	10.10-2	119
10.10.2	COS Power Waiver, IN0090-W-006A	10.10-3	IRN 121
10.10.3	COS Static Envelope Waiver, IN0090-W-009A	10.10-9	IRN 125
10.10.4	COS Weight Waiver, IN0090-W-007B	10.10-13	IRN 126

(This supersedes page xib dated 08 February 2002)

GLOSSARY

ACS	Advanced Camera for Surveys	IRN 115
BPI	Bits Per Inch	
C&DH	Communication & Data Handling	
CCB	Configuration Control Board	
CG	Center of Gravity	
COSTAR	Corrective Optics Space Telescope Axial Replacement	IRN 115
DAR	Deviation Authorization Request	
DRAM	Dynamic Random Access Memory	IRN 117
ECP	Engineering Change Proposal	
EMC	Electro Magnetic Compatibility	
EPS	Electrical Power System	
EV	Extra Vehicular	
FHST	Fixed Head Star Tracker	
FGS	Fine Guidance Sensor	
FOC	Faint Object Camera	
FOS	Faint Object Spectrograph	
FPS	Focal Plane Structure	
GRU	Ground Replaceable Unit	
GSE	Ground Support Equipment	
GSFC	Goddard Space Flight Center	
HRS	High Resolution Spectrograph	
HSP	High Speed Photometer	
ICD	Interface Control Document	
IFWG	Interface Working Group	
IRD	Interface Requirements Document	
K	Ground Strap Conductance	
LET	Linear Energy Transfer	IRN 117
LMSC	Lockheed Missiles & Space Company	
MLI	Multi-Layer Insulation	
MSFC	Marshall Space Flight Center	
NICMOS	Near-Infrared Camera and Multi-Object Spectrometer	IRN 115
ORU	Orbit Replaceable Units	
OTA	Optical Telescope Assembly	
P-E	Perkin-Elmer	
PCS	Pointing Control System	
PIRN	Preliminary Interface Revision Notice	

PIT	Processor Interface Table
Q	Heat Loss
RECP	Record Engineering Change Proposal
RGA	Rate Gyro Assembly
RIU	Remote Interface Unit
RM	Remote Module
RMS	Root Mean Squared
RSU	Remote Sensing Unit
SA	Solar Array
SRAM	Static Random Access Memory IRN 117
SI	Scientific Instrument
SSE	Space Support Equipment
SSM	Support Systems Module
ST	Space Telescope
STIS	Space Telescope Imaging Spectrometer IRN 115
STOCC	Space Telescope Operations Control Center
STR	Science Tape Recorder
TBD	To Be Determined
TBR	To Be Resolved

1.0 SCOPE

1.1 Purpose. This Interface Control Document (ICD) defines and controls the detailed designs of the Axial Scientific Instrument (SI) to Optical Telescope Assembly (OTA) and Support Systems Module (SSM) interface necessary to assure form, fit and functional compatibility within the Space Telescope (ST) Program. The contents of this ICD are responsive to the applicable requirements of the SI to OTA and SSM Interface Requirements Document, STR-02 (latest revision).

1.2 Organization. This ICD has been structured to define the "standard" interface design as provided by the OTA and SSM to all known or potential axial SIs and to define for each axial SI the particular use of that standard design which is appropriate to that SI. "Section 3 governs the requirements for the original axial SIs, while Section 4 governs the requirements for the Orbital Replacement Instruments (ORIs)." IRN 100

1.3 Content Status. The data presented in this document represent current firm design definition in all cases except for those noted with a To Be Determined (TBD) or a To Be Resolved (TBR). 'TBD' indicates the need for data which are currently not available, even in preliminary form. 'TBR' indicates that the data supplied are the best information available and must be resolved between two or more contractors.

Removal of either a 'TBD' or 'TBR' can only be accomplished with Interface Working Group approval. Generally this involves mutual acceptance but it may result in an Engineering Change Proposal (ECP) or a Deviation Authorization Request (DAR) being processed through the GSFC Level III and or the MSFC Level II Configuration Control Boards (CCB).

1.4 ICD Change Procedure. Changes to this ICD can be initiated either by the Government or Contractors through the appropriate NASA CCB and its established procedures.

TABLE 1.4-1
TBR LIST

ICD SECTION	SUBJECT	RESP ORG.	STATUS	ECD	
3.3-4	Ground Handling	P-E	ECP		
3.6.1.1.4.1	Thermal Power Mode Definitions (Hold)	HRS	ECP	At GSFC	
4.5.3.1	Resolve weight for ASCS Interface Plate for Bay 3 SI; Determine weight for ASCS Interface Plate for Bay 4 SI and Heatpipe Interface Plate for Bay 1 SI		LMMS	6/99	IRN 117
4.6.1.2.2.3	Retrieval	GSFC	TBR		IRN
4.6.1.2.2.4	Scheduled Maintenance	GSFC	TBR		100
4.7	Electrical Power	GSFC	TBR		

(This supersedes page 1.1-2 dated 29 May 1992)

2.0 APPLICABLE DOCUMENTS

The following documents form a part of this Interface Control Document (ICD) to the extent specified. In the event of conflict between the following referenced documents and this ICD, the following order of precedence is followed: 1. STR-02; 2. This document; 3. All other reference documents.

2.1 Government Documents

2.2 Non Government Documents

2.2.1 SI Documents

a. Space Telescope System Thermal Analysis (SI Data Book), ST/SE-24 Section E, LMSC/D979908. | Admin. Change

(Supersedes pg. 2.1-1 dated 29 June 1984)

3.0 REQUIREMENTS

3.1 Interface Functions. The Space Telescope (ST) is an unmanned orbiting astronomical observatory consisting of an Optical Telescope Assembly (OTA), a complement of Science Instruments (SIs) and a Support Systems Module (SSM).

3.1.1 OTA. The OTA provides error signals to the SSM for pointing control, the mechanical/thermal juncture between the OTA and SSM, the structural mounting and alignment accomodations for the SIs, and the electrical harness for the OTA-SI interconnect to the SSM. Additionally, the OTA provides structural mounting and alignment references for the SSM rate gyro assembly and fixed head star trackers.

3.1.2 SSM. The SSM provides the structural support, electrical power, communications, initial command decoding/storage/distribution, data accumulation/routing/storage/transmission, timing signals, environmental control and protection, aperture door, light shield, attitude maneuvering, and pointing control for the OTA/SI assembly.

3.2 General Interface Characteristics.

3.2.1 Interfaces. The interfaces with the SIs consist of mechanical, optical, structural, and electrical interfaces with the OTA; environmental (thermal, pressure, loads, contamination) with the OTA/SSM in combination, and functional (power, commands, telemetry, data, pointing control, structural, environmental, SSE) interfaces with the SSM.

3.2.2 Coordinate Systems. The SI to OTA and SSM Interface Requirements Document, STR-02, defines the ST (V1, V2, V3) coordinate system.

The SI coordinate systems, required to properly define the SI to the ST coordinate system, are defined in the following paragraphs. Station position values are given in inches unless otherwise noted.

3.2.2.1 Axial SI Coordinate System. An orthogonal coordinate system P1, P2, P3 is defined in Fig. 3.2-1 for each of the axial SI positions such that the P1 axis is parallel to the ST V1 axis with the SI installed in the ST. The P2 and P3 axes rotate 90° clockwise into each position number one to two, two to three, three to four and four to one. The origin, Point "A", of each SI system is the center of the forward SI to OTA registration fitting (see 3.3.7.1). Each SI is designed to be capable of being mounted in any of the four quadrants as shown in Figure 3.2-1 and meets all of the interfaces as defined in this document. The designated positions for the first complement of scientific instruments are the following, position one High Resolution Spectrograph (HRS), position two Faint Object Spectrograph (FOS), position three Faint Object Camera (FOC), and position four High Speed Photometer (HSP).

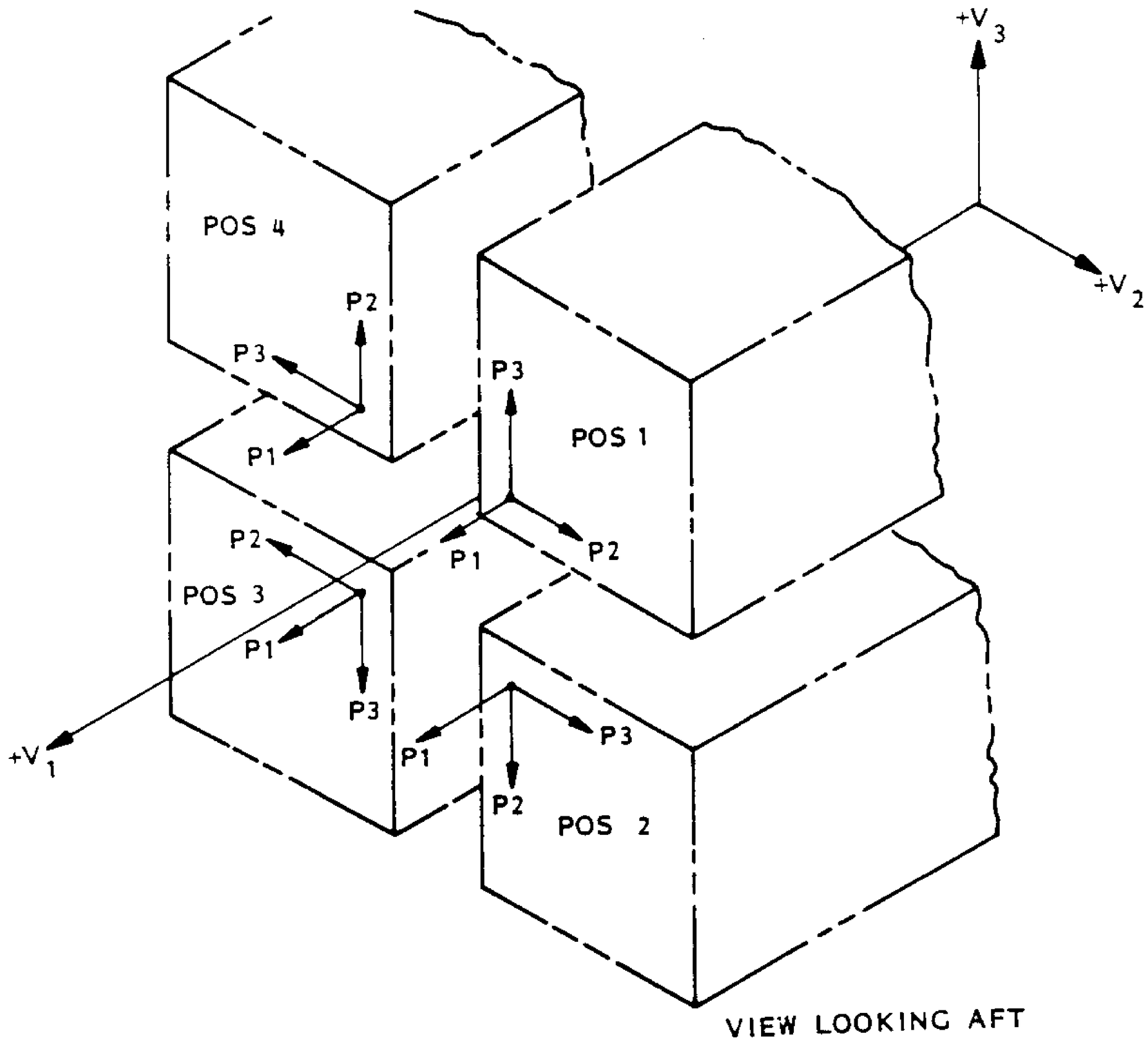

Figure 3.2-1 Axial SI Coordinate System

3.3 Mechanical Interfaces. The mechanical interfaces described in this section include the SI envelope, SI mounting, guiderail/OTA changeout guides, ground handling, space support equipment, EV crewmember handholds, alignment, in-orbit removal and installation, electrical connector locations, SI accessibility, venting, pressurization, and purge interface definitions.

Unless otherwise noted, all dimensions are in inches and tolerances are as follows:

- o .XXX = ± 0.005 in
- o .XX = ± 0.01 in Angles = ± 30 $\overline{\text{min}}$
- o .X = ± 0.05 in

All dimensions of the above figures are applied at 21°C.

Unless otherwise noted, all mechanical and structural interface surfaces where intimate contact is made are free of paints or similar materials and have a surface roughness of no greater than 63√. UNF Helicoils are compatible with UNJF bolts and are acceptable. The threaded length of a UNJF bolt is twice the diameter of the threaded bolt end.

3.3.1 SI Envelope. Each SI fits within the envelope shown in Figures 3.3-1 except for local intrusions as specified in Figures 3.3-3, through 3.3-16. The dynamic envelope is the static envelope with the exception of the outside P2, P3 surfaces which extend 0.25 inch as shown in Figure 3.3-2.

3.3.2 Mounting Points and Constraints. Each SI is supported and constrained by the OTA at three points (A, B, C) shown in Figure 3.3-1. Constraint directions applicable to each of the three points are as follows:

Point	DIRECTION		
A	± V1	± V2	± V3
B		± V2	± V3
C		± Perpendicular to the Bisector of V2, V3	

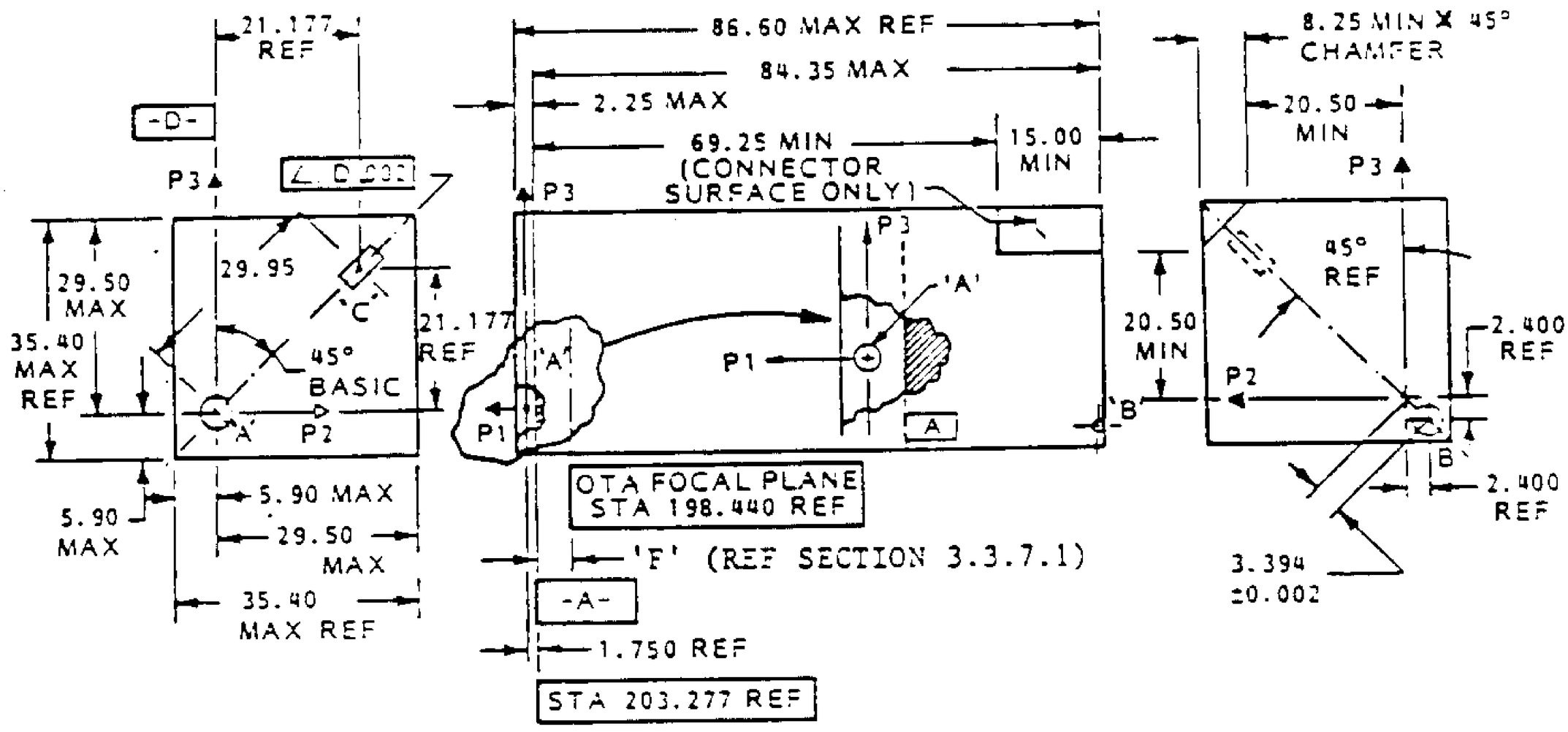

IRN 71

IRN 86 (See appendix 10.1)

Figure 3.3-1 Static Envelope

(Supersedes pg. 3.3-2 dated 20 November 1984)

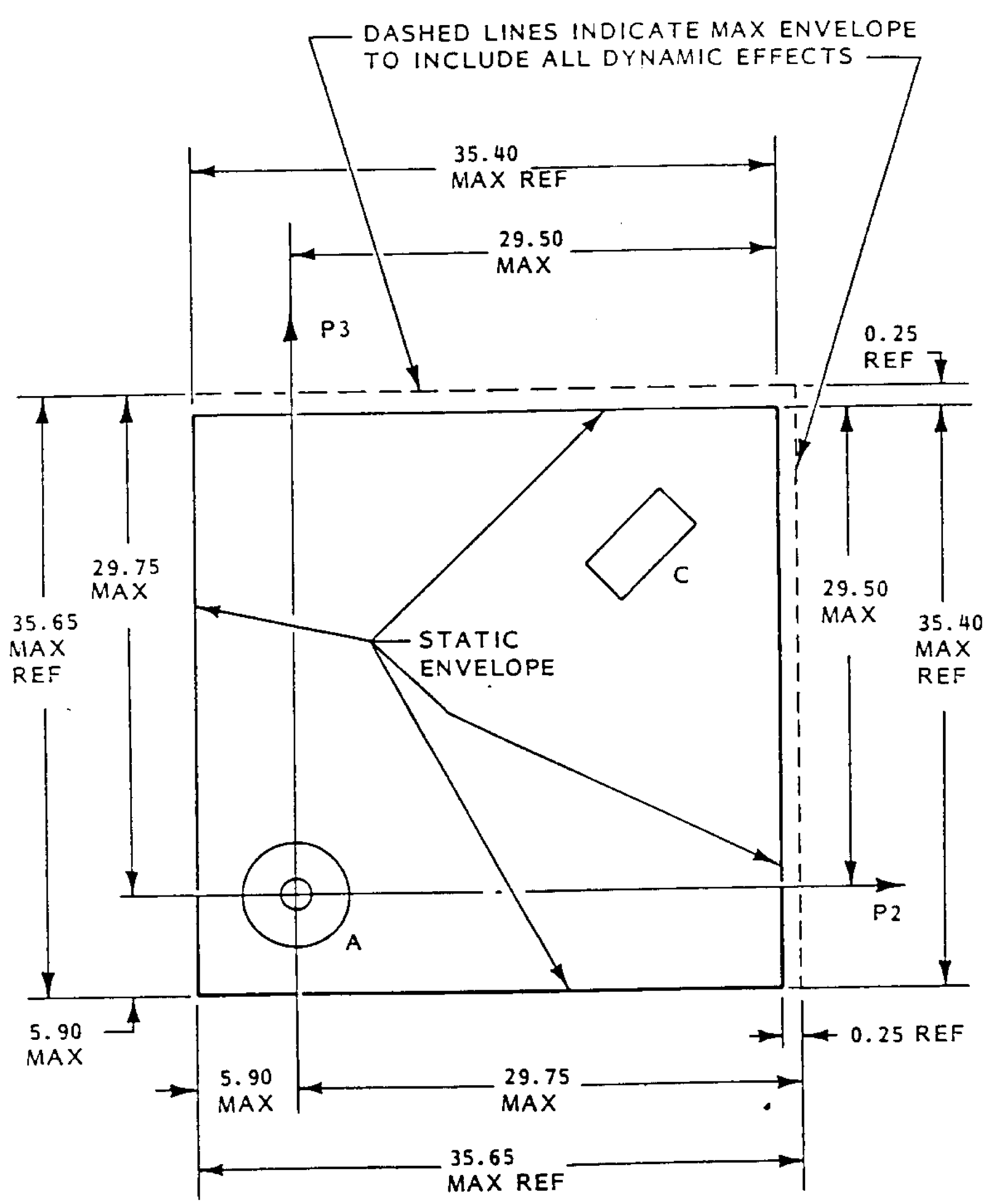

IRN 75 (See Appendix 10.1)

Figure 3.3-2 Dynamic Envelope

(Supersedes pg. 3.3-3 dated 29 June 1984)

3.3.2.1 Mount Point Fitting Interfaces. The OTA/SI Mount Point Fitting "A" is a ball in socket fitting whose interface is shown in Figure 3.3-3. The ball half of the fitting (shown in Figure 3.3-4) is mounted to the SI.

The OTA/SI Mount Point Fitting "B" is a rod in spherical bearing fitting whose interface is shown in Figure 3.3-5. The spherical bearing half of the fitting (shown in Figure 3.3-6) is mounted to the SI.

The OTA/SI Mount Point Fitting "C" is a ball in flexure constraint whose interface is shown in Figure 3.3-7. The flexure half of the fitting (shown in Figure 3.3-8) is mounted to the SI.

The SI half of fittings A, B, and C (including bolts) is provided to the SI Contractor(s) by the OTA contractor and installed by the SI Contractor(s). Bolt locking is performed by the SI contractor using material and procedure provided by the OTA contractor.

3.3.3 Guiderail Interface. Guiderails to facilitate in-orbit removal and replacement of SIs are attached to the SIs as shown in Figures 3.3-9, 3.3-10, 3.3-11 and 3.3-12. The guiderails and associated attach hardware are provided by the OTA contractor and installed by the SI contractors. Loads for these guiderails are specified in para. 3.5.1.8.2.

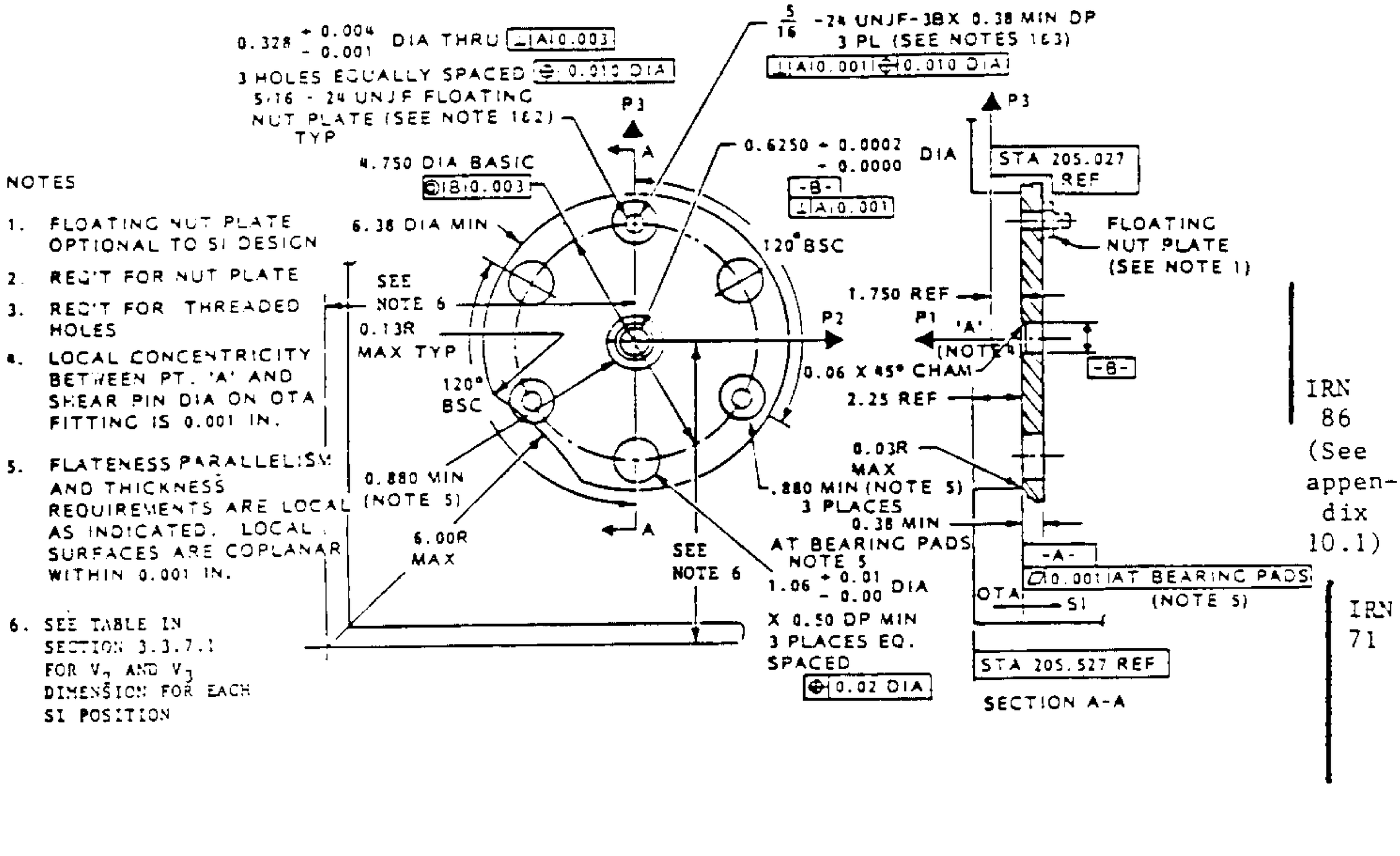

IRN 86 (See appendix 10.1)

IRN 71

Figure 3.3-3 Mount Point Interface 'A'

(Supersedes pg. 3.3-5 dated 20 November 1984)

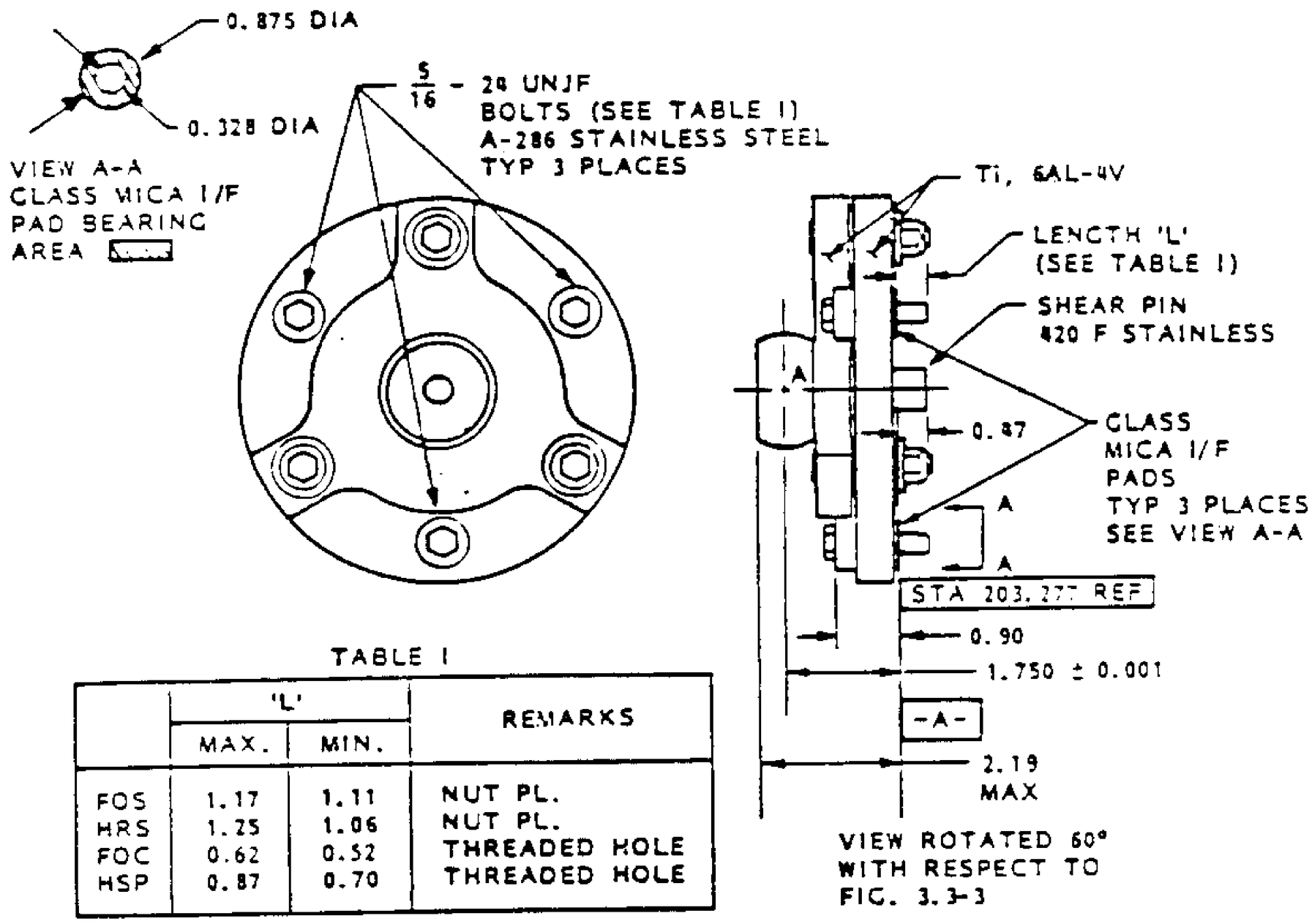

TABLE I

	'L'		REMARKS
	MAX.	MIN.	
FOS	1.17	1.11	NUT PL.
HRS	1.25	1.06	NUT PL.
FOC	0.62	0.52	THREADED HOLE
HSP	0.87	0.70	THREADED HOLE

IRN 86 (See appendix 10.1)

Admin. Change

Figure 3.3-4 Mount Point Fitting 'A' SI Half

(Supersedes pg. 3.3-6 dated 20 November 1984)

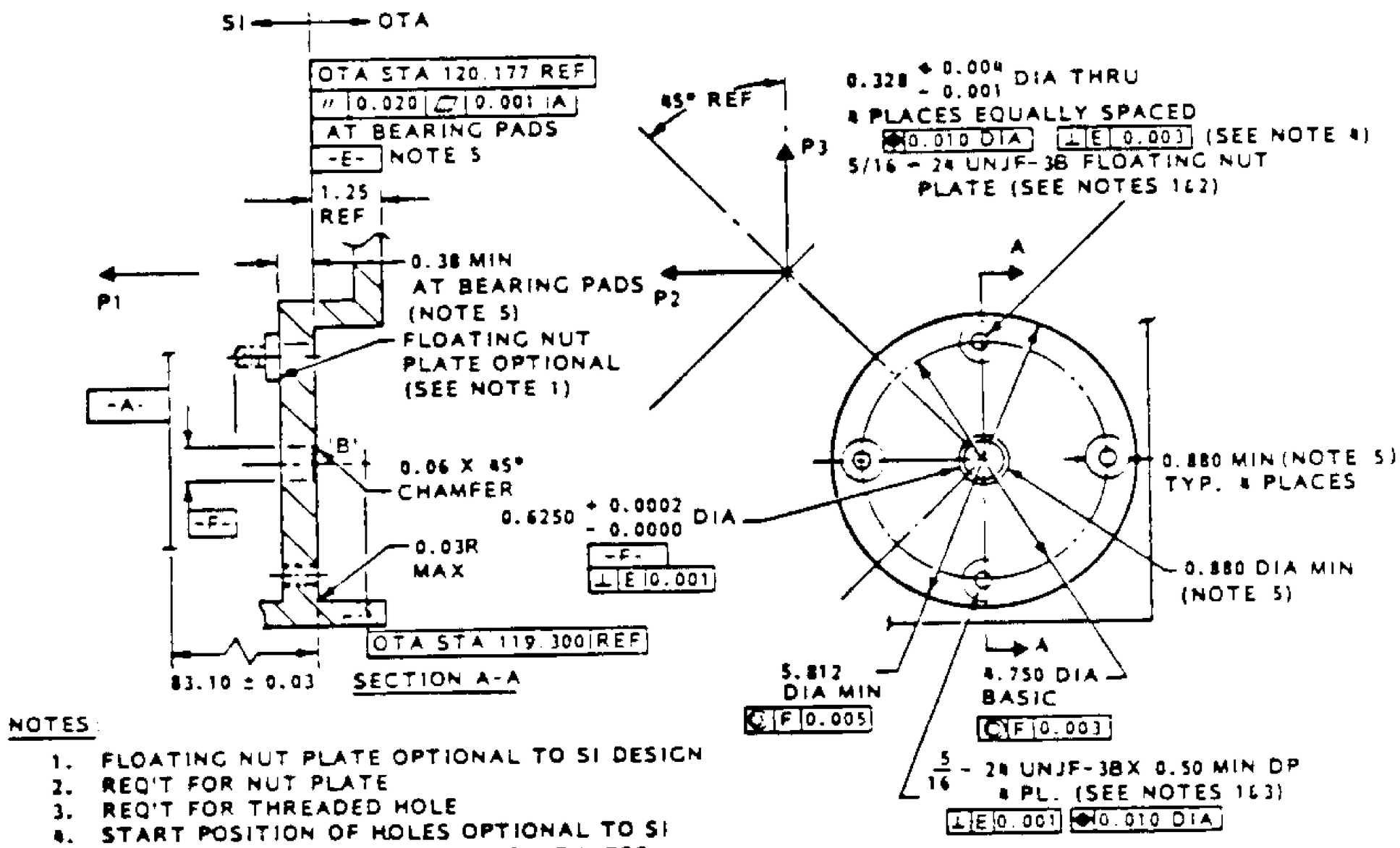

NOTES:

1. FLOATING NUT PLATE OPTIONAL TO SI DESIGN
2. REQ'T FOR NUT PLATE
3. REQ'T FOR THREADED HOLE
4. START POSITION OF HOLES OPTIONAL TO SI
5. FLATNESS, PARALLELISM AND THICKNESS REQUIREMENTS ARE LOCAL AS INDICATED. LOCAL SURFACES ARE COPLANAR WITHIN 0.001 INCH.

IRN 86 (See appendix 10.1)

Figure 3.3-5 Mount Point Interface 'B'

(Supersedes pg. 3.3-7 dated 29 June 1984)

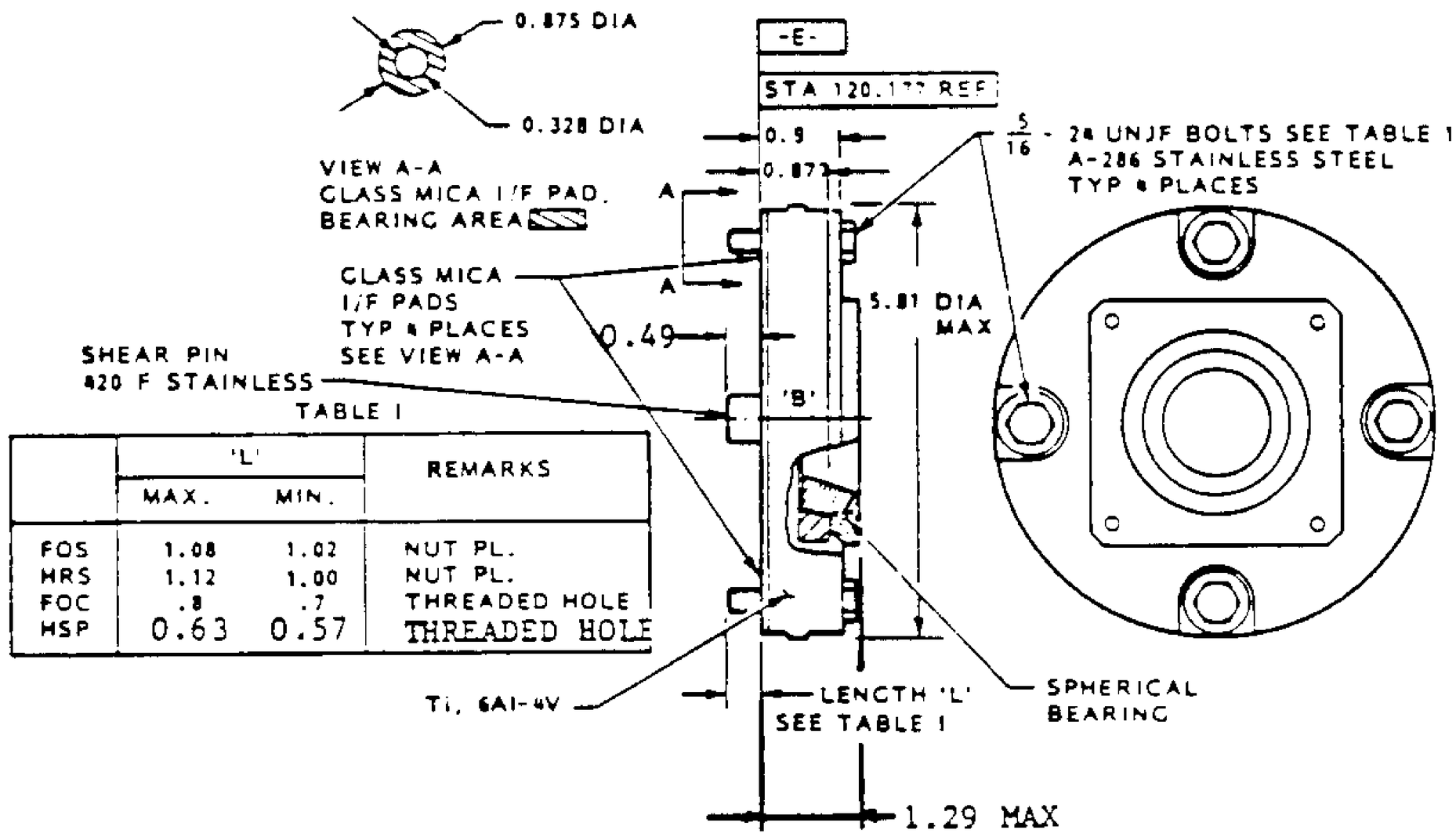

TABLE I

	'L' MAX.	'L' MIN.	REMARKS
FOS	1.08	1.02	NUT PL.
HRS	1.12	1.00	NUT PL.
FOC	.8	.7	THREADED HOLE
HSP	0.63	0.57	THREADED HOLE

IRN 86 (See appendix 10.1)

IRN 86 (See appendix 10.1)

Figure 3.3-6 Mount Point Fitting 'B' SI Half

(Supersedes pg. 3.3-8 dated 29 June 1984)

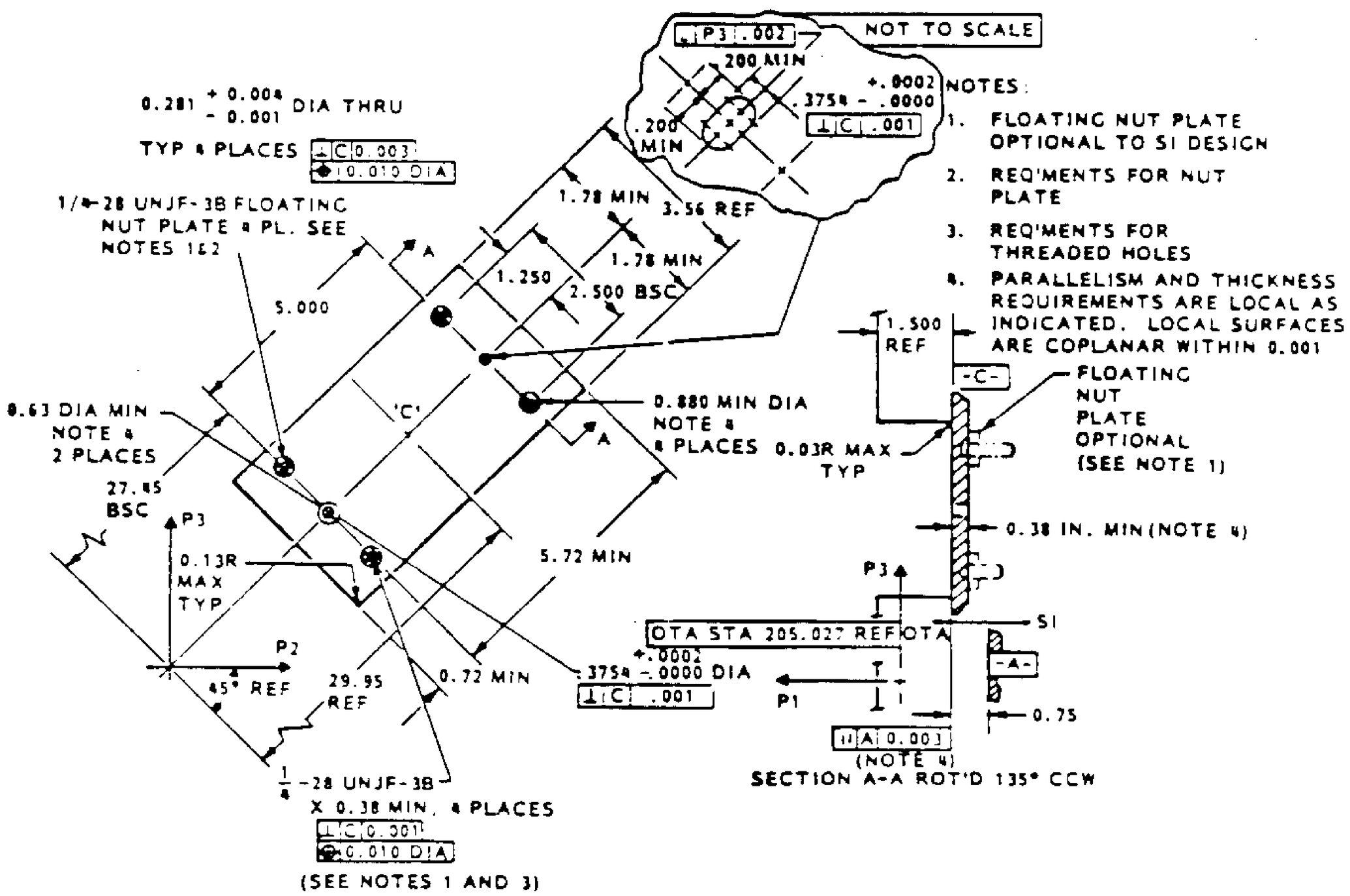

IRN 86 (See appendix 10.1)

Figure 3.3-7 Mount Point Interface 'C'

(Supersedes pg. 3.3-9 dated 29 June 1984)

TABLE I

	'L'		SHEAR PIN LGTH.	REMARKS
	MAX.	MIN.		
FOS	.78	.74	0.40 ± 0.03	NUT PL.
HRS	1.25	1.06	.5	NUT PL.
FOC	0.50	0.40	.5	THREADED HOLE
HSP	0.50	0.44	.5	THREADED HOLE

IRN 86 (See appendix 10.1)

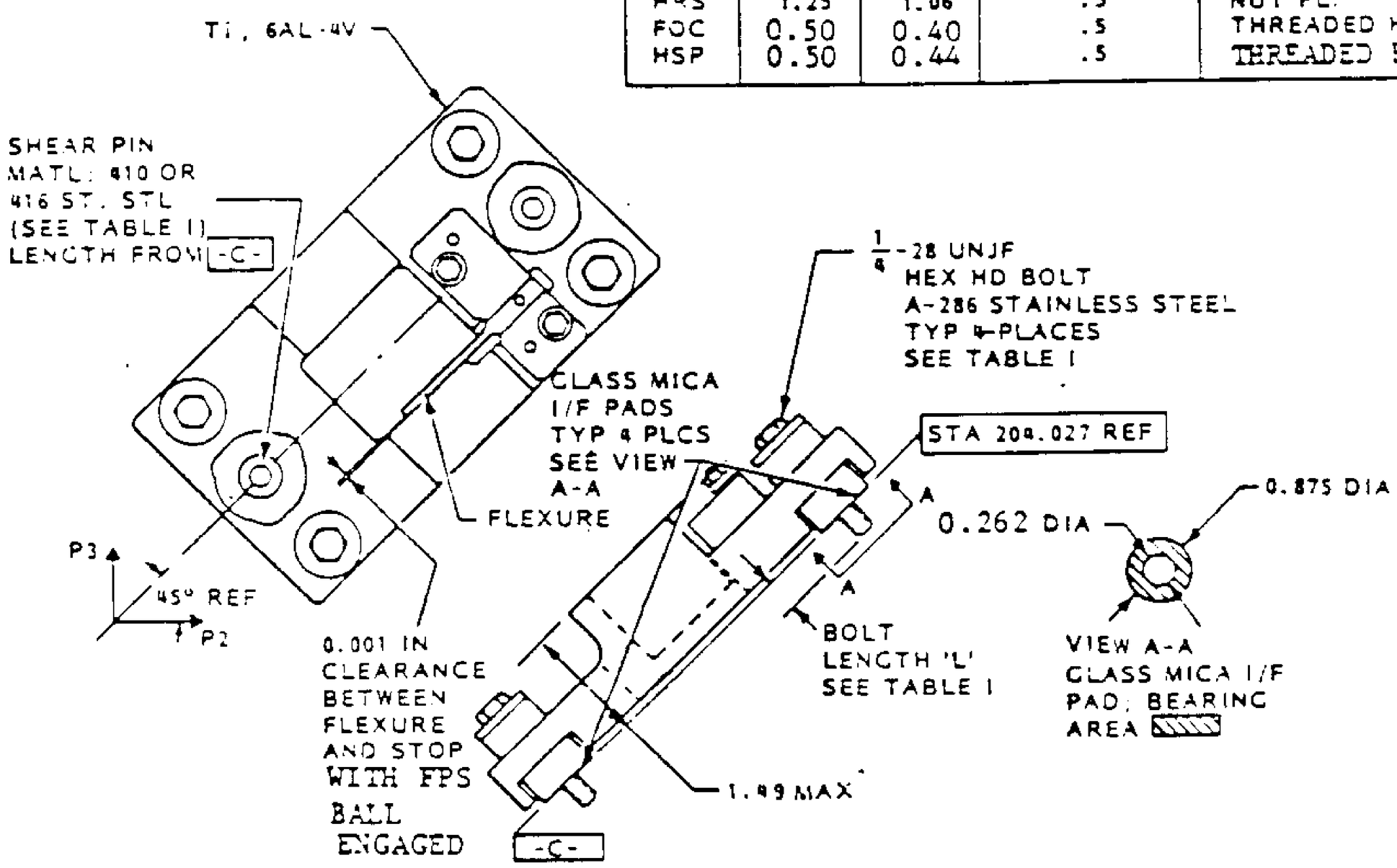

Figure 3.3-8 Mount Point Fitting 'C' SI Half

(Supersedes pg. 3.3-10 dated 20 November 1984)

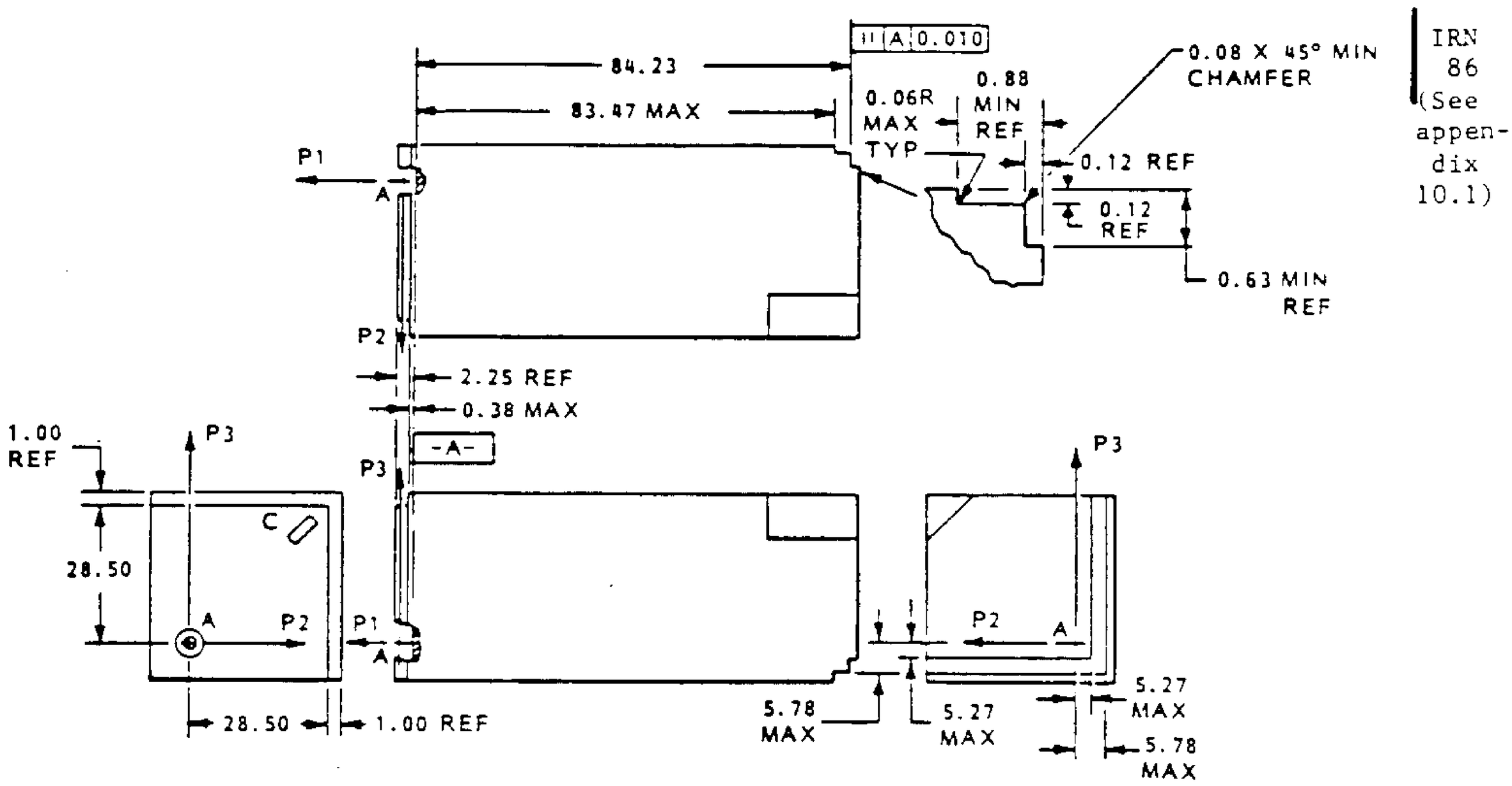

Figure 3.3-9 Guiderails Interface Envelope

(Supersedes pg. 3.3-11 dated 29 June 1984)

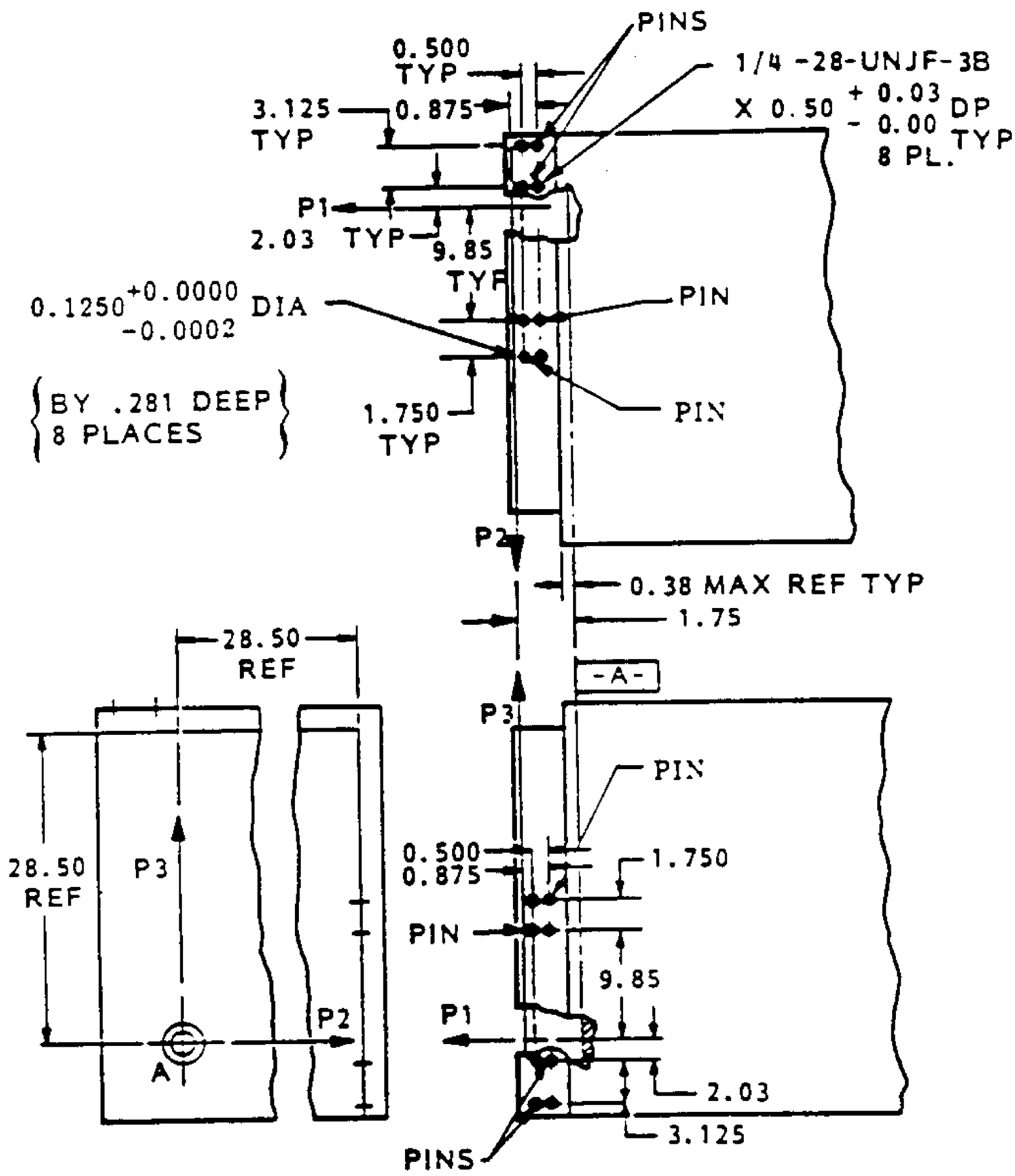

IRN 86 (See appendix 10.1)

IRN 86 (See appendix 10.1)

IRN 86 (See appendix 10.1)

Figure 3.3-10 Forward Guiderail Interface

(Supersedes pg. 3.3-12 date29 June 1984)

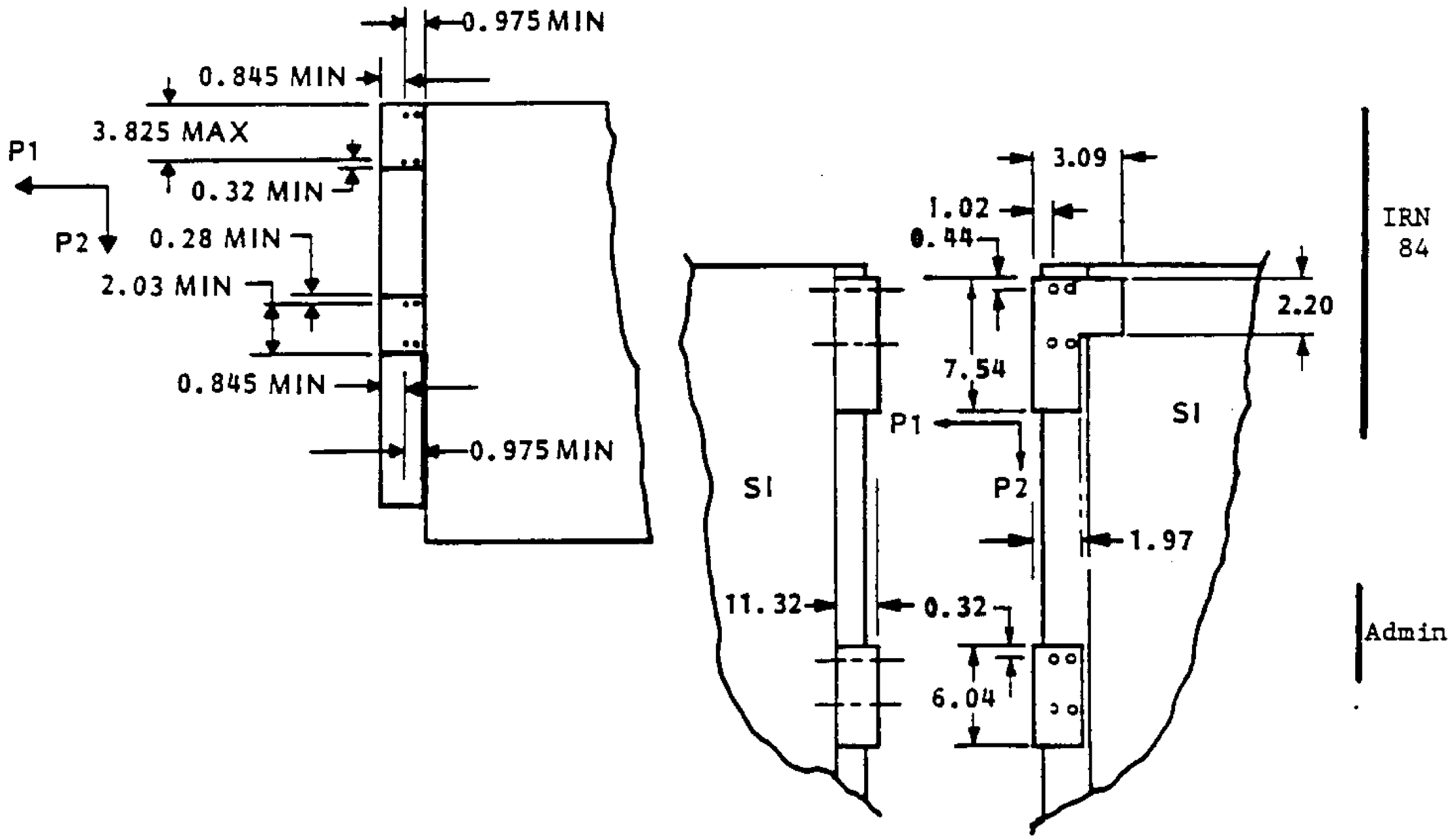

FORWARD GUIDERAILS ENVELOPE

MATERIAL: ACETAL RESIN DELRIN 500

SURFACE FINISH: EMISSIVITY >0.7

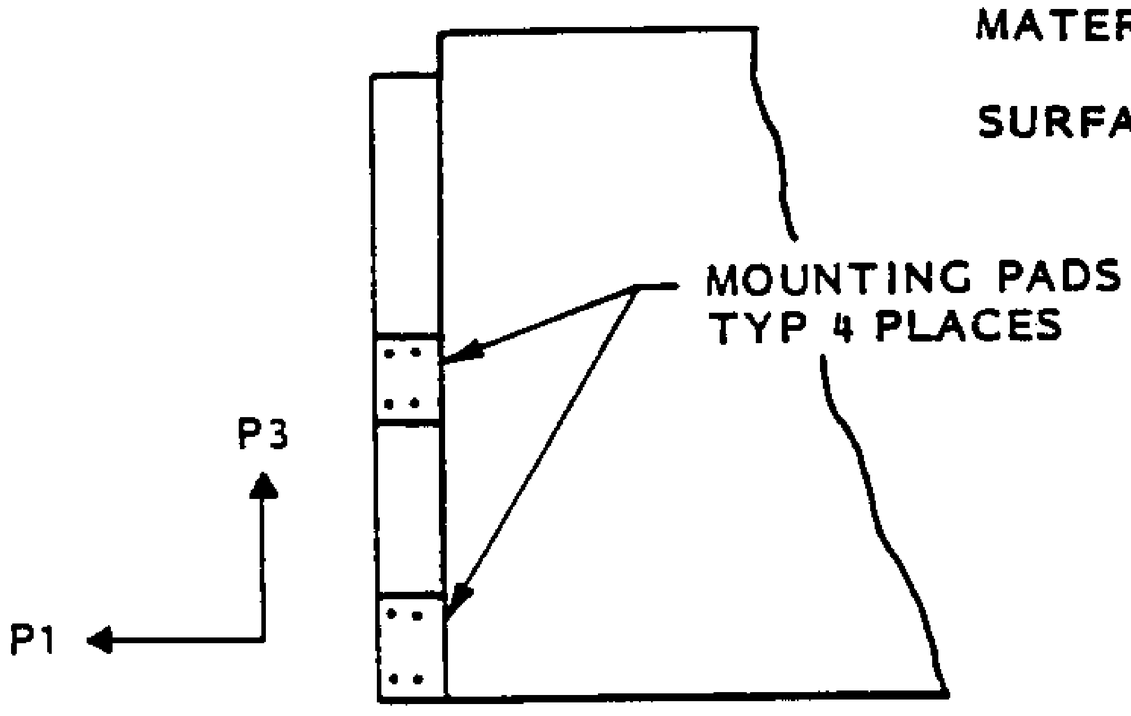

Figure 3.3-11 Forward Guiderail Pads And Guiderails Envelope

(Supersedes pg. 3.3-13 dated 29 June 1984)

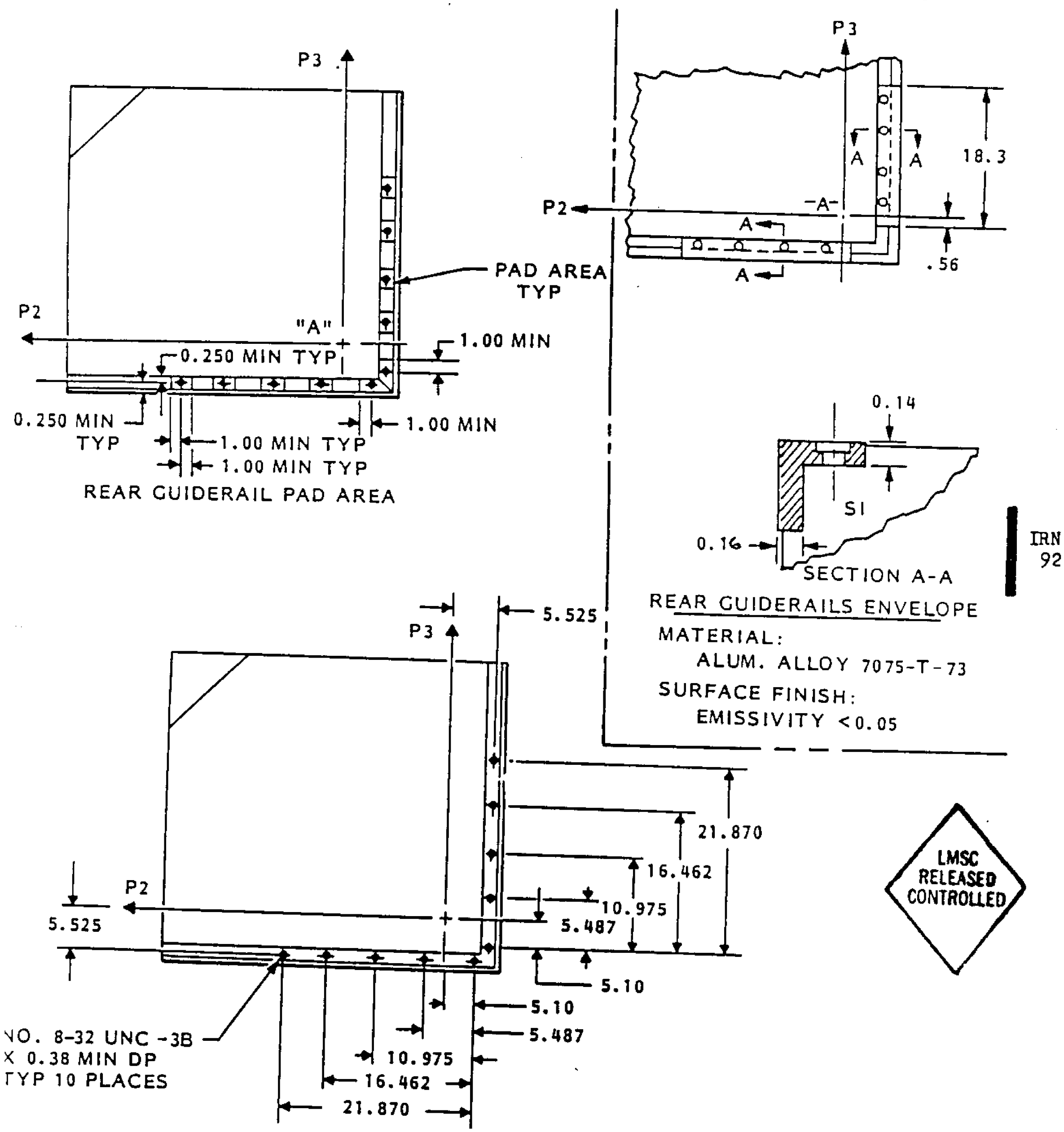

Figure 3.3-12 Rear Guiderail Interface and Pad Area

3.3.4 Ground Handling Interface. All SIs are designed for installation or removal during ground operations while the OTA/SSM is in the vertical position (+V1 pointing up). OTA and SSM designs provide adequate clear access to allow SI installation or removal without degradation or damage of flight hardware. IRN 097

OTA GSE interfaces with the SI at the GSE interface points shown in Fig. 3.3-13 in a statically determinate manner. The GSE provides the capability to lift an SI from the P1 horizontal or the P1 vertical attitude. The static deflection of the SI with the +P1 up when lifted by the GSE hard-points is not to exceed .06 inches with respect to the GSE hard-points.

Each of the +P2 and +P3 faces of the SI, containing the GSE interface points, is readily accessible and unobstructed when the SI is presented to the GSE (either from its shipping container or receiving inspection dolly as appropriate).

The SI design is such that either of the two GSE 3-point attachment patterns supports the full SI weight in any attitude prior to installation into ST and also in the P1 vertical attitude.

3.3.5 Space Support Equipment Interface. The Space Support Equipment (SSE) interface with the axial SI positioning handle is given in Fig. 3.3-14 or may also interface with the axial SI GSE interface points, as shown in Fig. 3.3-13 and with interface points A, B and C.

3.3.6 EV Crewmember Handholds. The SI provides interface points as defined in Fig. 3.3-14 for the attachment of handholds and/or equipment tethers (Fig. 3.3-15) for EV crewmember use in zero gravity. Two handhold locations are provided on each of the +P2 and +P3 surfaces. Loads for these handholds/tethers are specified in 3.5.1.8.1. Handholds and fasteners are provided by the OTA contractor and installed by the SI contractor.

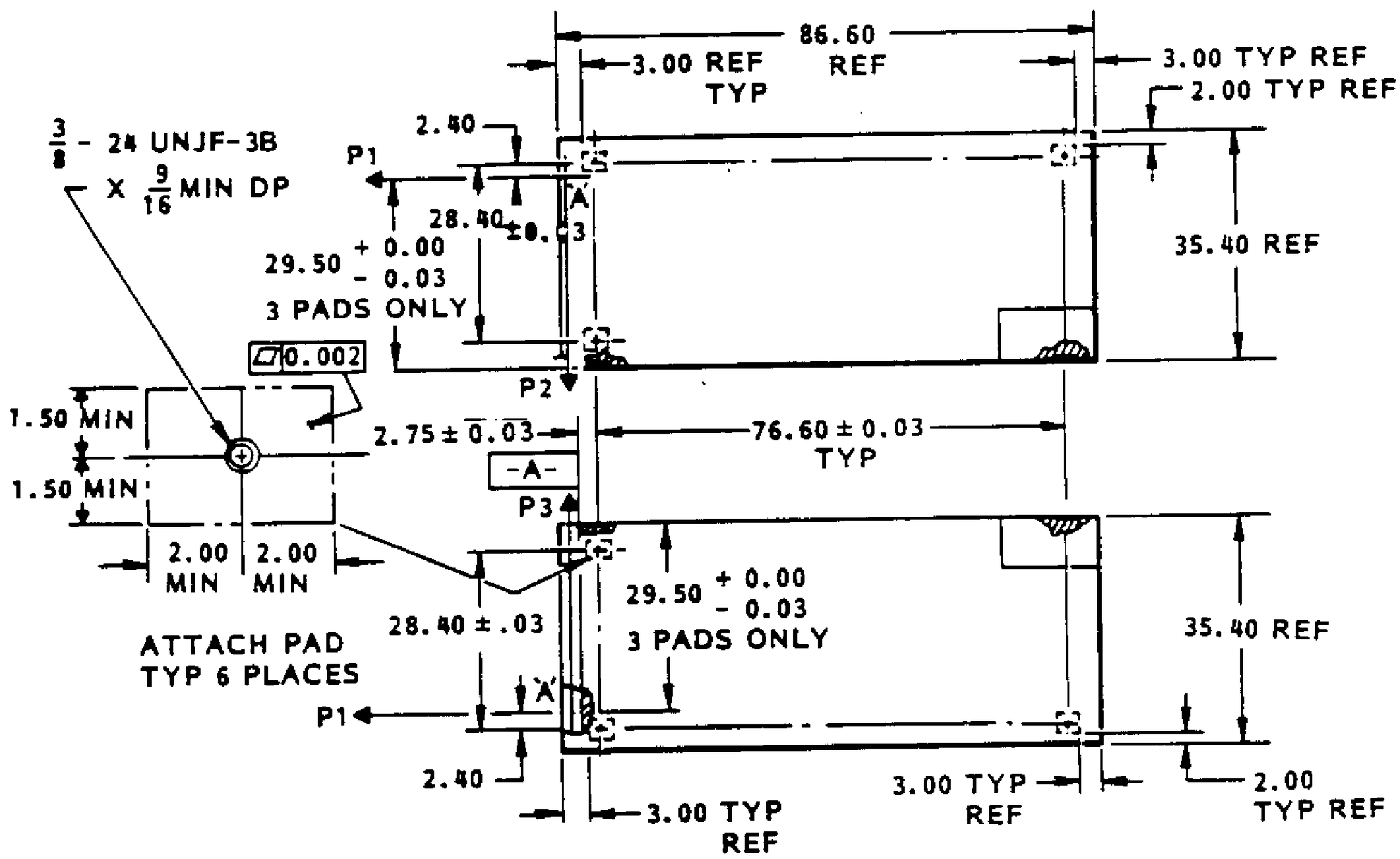

Figure 3.3-13 SI/GSE Interface

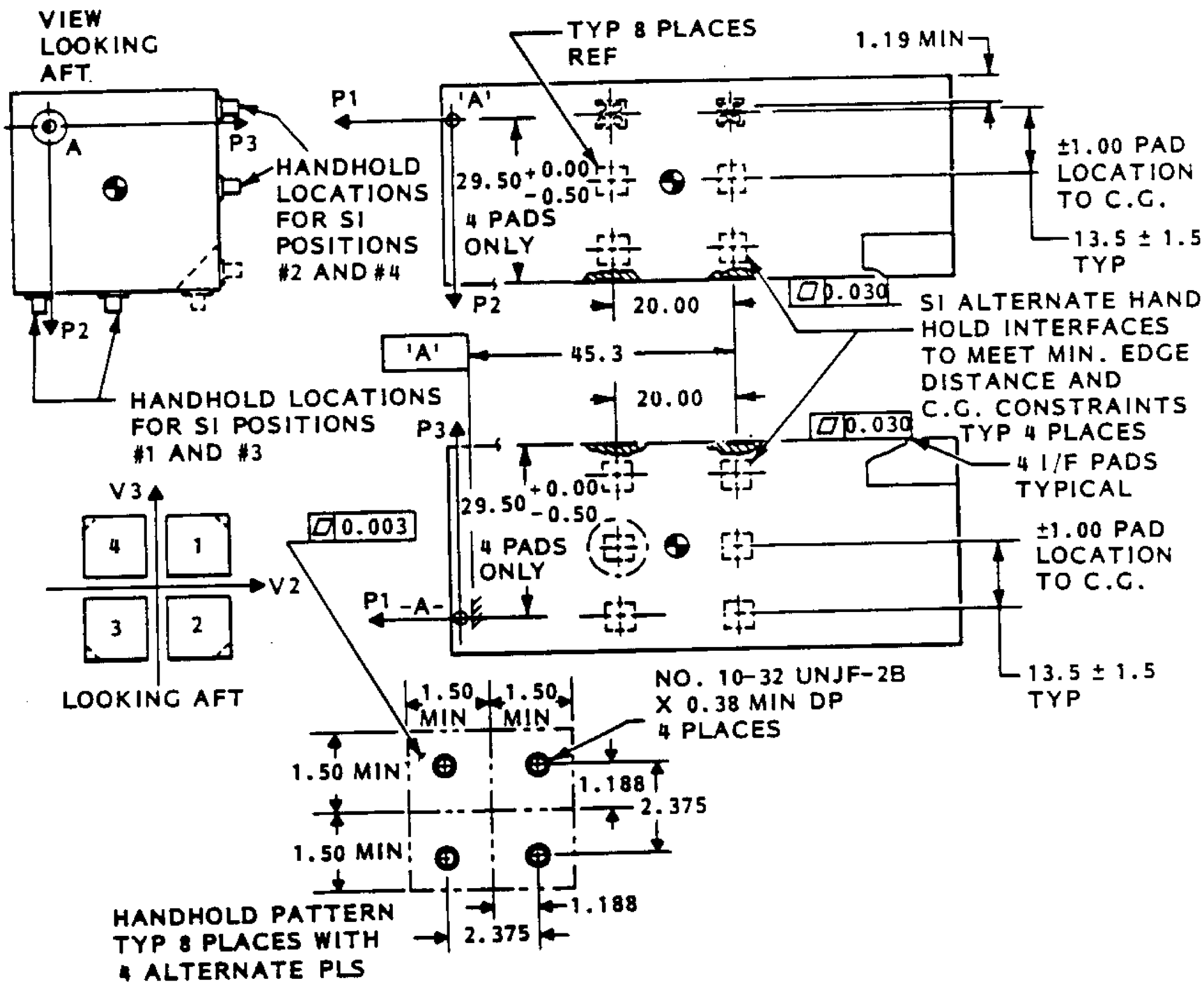

Figure 3.3-14 SI/SSE Handhold Interface

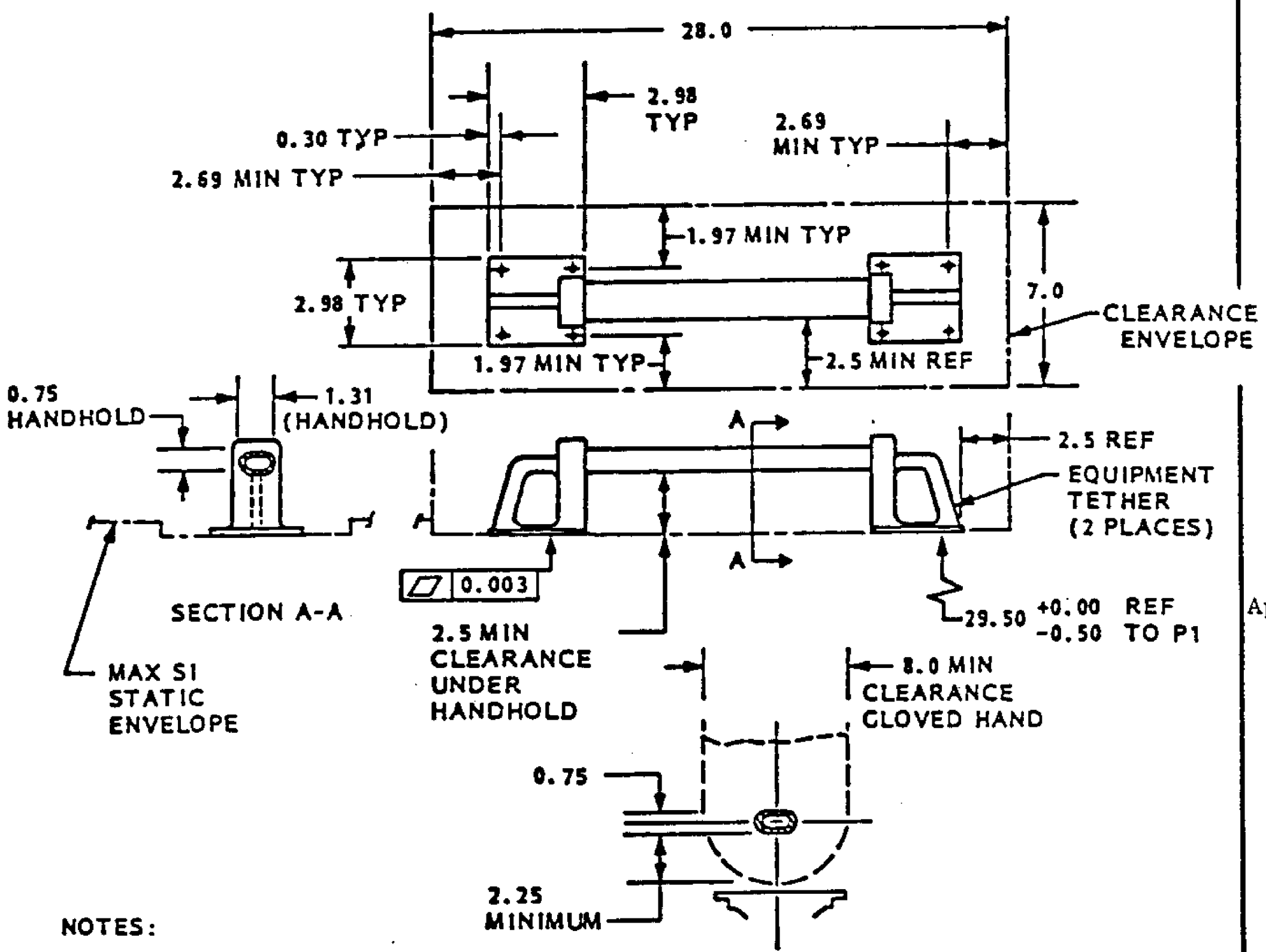

IRN 75 (See Appendix 10.1)

NOTES:

1. COLOR AND SURFACE FINISH ARE GOLD ANODIZED

2. SEE FIGURE 3.3-14 FOR BOLT PATTERN AND DISTANT BETWEEN MOUNTING PADS

Figure 3.3-15 SI Handhold and Minimum Clearances

(Supersedes pg. 3.3-18 dated 29 June 1984)

3.3.7 Alignment. Alignment values in this section include all mechanical, latching mechanism, thermal, and optical effects. The alignment stability applies to any point in the data field of view.

3.3.7.1 Alignment of SIs Within the OTA. The origins of the four axial SI coordinate systems, mount point A, are located at the following ST coordinates:

IRN 71

SI Positions	'F' Dimension (Ref. Fig. 3.3-1)	V1	V2	V3
1	4.842 (Ref.)	205.032 (Ref.)	6.421 ± 0.006	6.428 ± 0.006
2	4.836 (Ref.)	205.026 (Ref.)	6.422 ± 0.006	-6.374 ± 0.006
3	4.832 (Ref.)	205.022 (Ref.)	-6.380 ± 0.006	-6.372 ± 0.006
4	4.838 (Ref.)	205.028 (Ref.)	-6.378 ± 0.006	6.428 ± 0.006

IRN 86 (See appendix 10.1)

The orientations of the centerlines of the A and C mount points with respect to the ST coordinates as measured in a positive direction from the +V2 axis are as follows:

IRN 71

SI Positions	Orientation
1	45.0128 deg (Ref.)
2	314.9967 deg (Ref.)
3	225.0086 deg (Ref.)
4	135.0233 deg (Ref.)

The SI P1 axis is parallel to the ST V1 axis within 30 arc sec. The SI P2 and P3 axes are oriented by the A and C mount points, as defined above, to within 40 arc sec. The static focus error at the SI f/24 paraxial focus ('F' dimension of Figure 3.3-1), after optimization of OTA optics on orbit, is less than 150 microns (3σ).

(Supersedes pg. 3.3-19 dated 20 November 1984)

3.3.7.2 Short Term Stability of OTA/SI Alignment (24 Hours) During science mission observation by the SI, the maximum displacement of the SI registration fitting 'A' with respect to the OTA focal surface is ± 0.3 um in V2 or V3 and ± 7.5 um in V1 during any single exposure period. The single exposure period is the entire period of time that the ST is registered on a target and is receiving information.

Maximum rotations of any SI about its registration fitting 'A' constrained by the OTA focal plane structure are less than ± 0.2 arc-sec during any single exposure period.

Axial separation between surfaces A and E (Fig. 3.3-5) does not change by more than 0.050 during any ST constant orientation 24 hour period. If the axial S1 is held in single mode (operational or hold) for this period the axial length change is less than 0.040. The maximum change in SI average effective sink temperature during this period is 12°C. OTA focus change during any 24 hour period is less than 250 microns (3σ).

(New Page created by IRN 71 overflow)

3.3.7.3 Long Term Stability of OTA/SI Alignment (100 Hours) Long term stability is defined as that which is applicable to pointing repeatability. The maximum displacement of the SI registration fitting 'A' with respect to the OTA focal surface is ± 1 um in V2 or V3 and to within ± 7.5 um in V1.

Maximum rotations of any axial SI about its registration fitting 'A' constrained by the OTA focal plane structure are less than ± 0.5 arc-sec.

3.3.8 Orbit Removal and Installation. All SIs are designated as Orbit Replaceable Units (ORUs).

Removal and installation of each axial SI is along the V2 axis and does not require the removal of any other SI module.

The OTA/SI interface is indexed to the OTA structure to provide the necessary alignment within allowable tolerances without in-orbit adjustment.

3.3.8.1 Crew and SI Safety During Change-Out. Shields or covers are provided by the SI for non-ruggedized portions and external optical elements of the axial SI to protect them from damage by an EV crewmember and from contamination during in-orbit changeout operations.

All external 2 plane edges exposed to the EV crewmember have 0.12 inch minimum radius. All external 3 plane corners exposed to the EV crewmember have 0.25 inch minimum radius. Both these radii can be replaced with a 45 degree chamber with leg dimension equal to the specified radius with the resulting edges broken to 0.06 inch radius. Protruding edges of thickness less than 0.25 inches exposed to the EV crewmember have full radius or are rolled/curled.

Access holes or openings in the dimensional range of 0.75 to 1.3 inches are guarded if exposed to the EV crewmember gloved hand. Small protrusions less than 0.187 inches are rounded to a radius of 0.06 inches. Edges of exposed mismatched surfaces (of less than 0.187 inches) are either smoothed and rounded to 0.06 inch radius, chamfered to 0.06 inch by 45 degrees or covered by an appropriate material.

When exterior MLI is used on the axial SI, the outer layer must be 0.002 inches minimum. Vent holes in the exposed surface of MLI are less than 0.4 inches in diameter to prevent snagging. SI changeout does not require MLI removal or alteration. The total MLI blanket thickness is included in design solutions to meet the edge and corner requirements for crew safety.

3.3.9 Electrical Connector Locations. Electrical connectors are located on each SI as shown in Figures 3.3-16 and 3.3-17. The test connector cover is provided by the OTA.

3.3.9.1 Ground Strap Location. The ground strap is shown in Fig. 3.3-16. The ground strap is supplied by the OTA contractor. The captive bolt and receptacle are shown in figure 3.3-16. The captive bolt and receptacle are supplied by the SSM contractor and installed by the SI.

3.3.10 SI Accessibility. After installation of the SIs into the ST, access to the SIs is limited to contingency situations in which ground testing has indicated a malfunction requiring entry of personnel into the aft shroud compartment. The contamination monitor data may be available to the SIs (without removing the SI) during such contingency situations.

3.3.11 Venting, Pressurization and Purge. Vents for the Axial SIs are located in the zone of the -P1 face of the instrument as shown in Figure 3.3-18. The purge fitting is located on each SI as shown in Figures 3.3-16 and 3.3-17. A purge is provided continuously by the SSM while the SIs are at the ST Assembly facility, in transit to and at KSC except for periods of up to one hour. The purge is terminated 13.5 to 72 Hrs prior to launch. The purge fitting is provided by the SSM contractor and installed by the SI contractor. The quality of the purge gas is as follows:

GAS	PURITY
KSC manufactured breathing air (synthesized from LO_2 and LN_2) with the following allowable impurities	Nitrogen 80 ± 1% Oxygen 20 ± 1%
Water (ppm)	5.7
Dewpoint (^{o}C @ $21^{o}C$, 760 mm)	$-64.4^{o}C$
Hydrocarbons, (ppm as CH_4)	5.0
Hydrogen, (ppm)	25.0
Argon, (ppm)	400.0
Carbon dioxide, (ppm)	5.0
Carbon monoxide, (ppm)	5.0
Neon and Helium, (ppm)	25.0

ADMIN

7 micron nominal filtration is provided by the SSM contractor. The SSM provides to each SI a purge gas flow of up to 3 ft^3/hr at a maximum pressure of 0.25 psig for SI safety.

3.3.12 Cryogenic Venting. For any SI using cryogenic cooling the location of the cryogenic exhaust vent is shown in Figure 3.3-18.

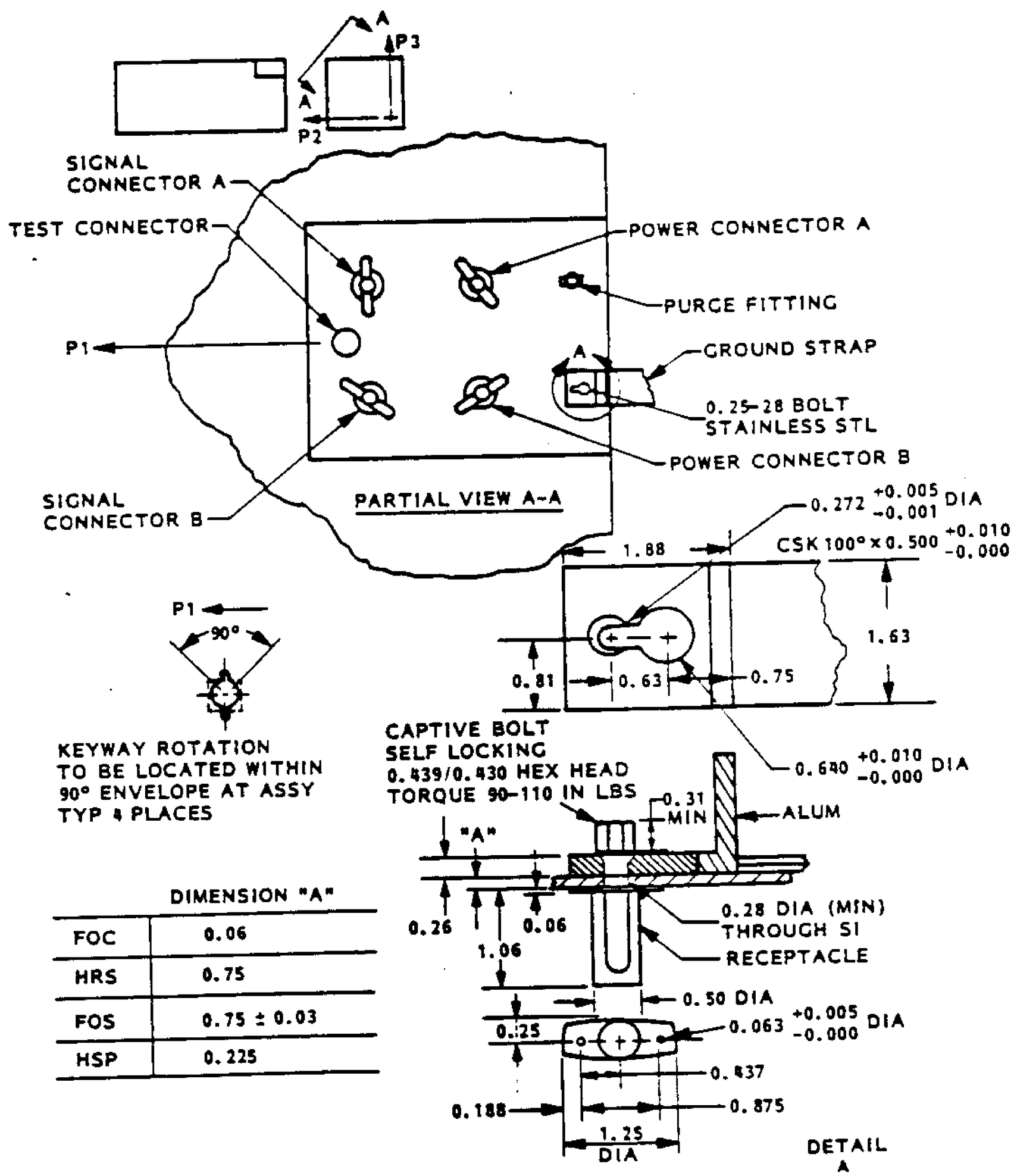

DIMENSION "A"	
FOC	0.06
HRS	0.75
FOS	0.75 ± 0.03
HSP	0.225

Figure 3.3-16 Axial SI Electrical Envelope for Connector and Purge Fitting Arrangement

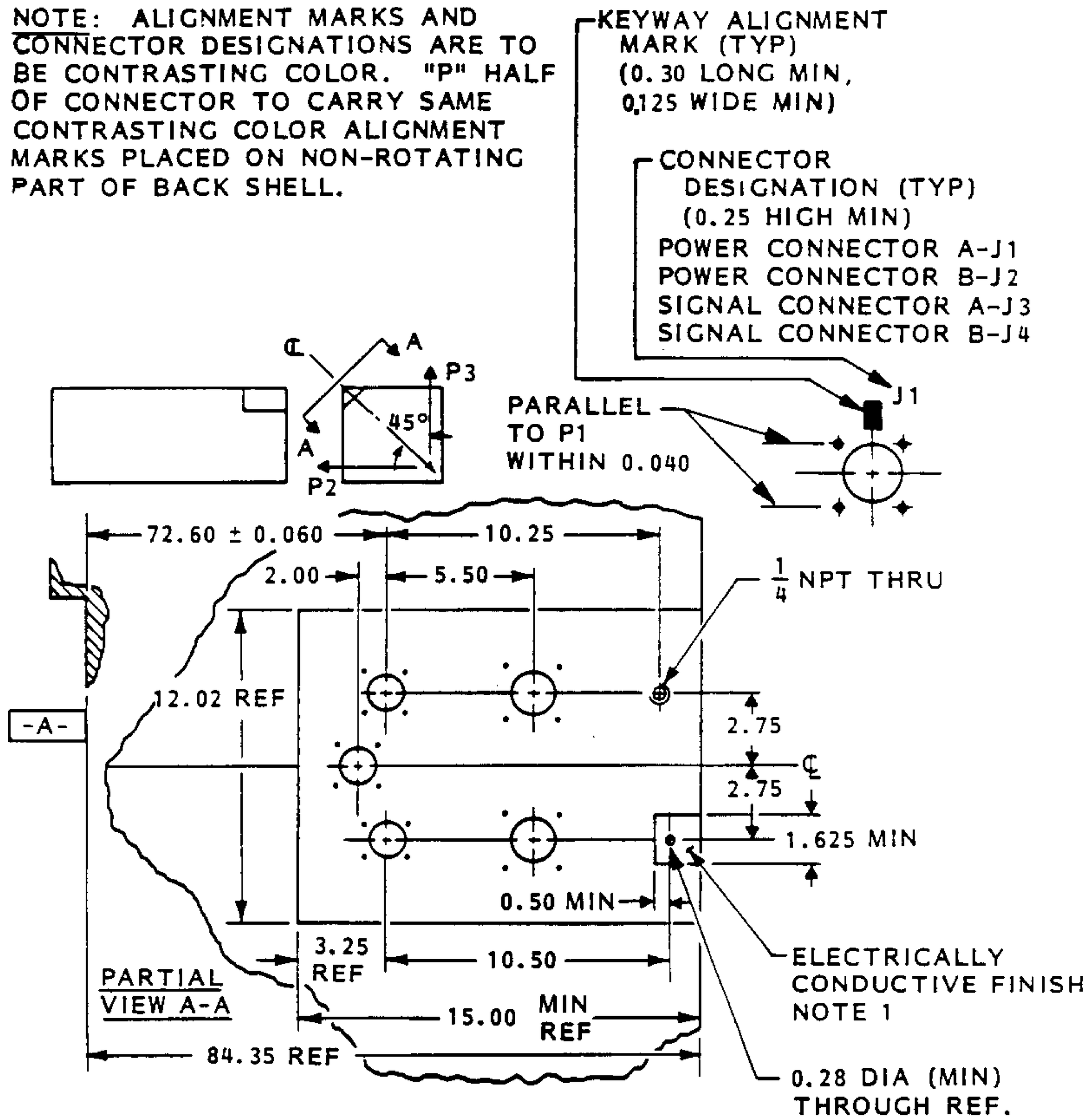

NOTES: 1. REFER TO SECTION 3.7.8 FOR GROUND STRAP CHARACTERISTICS

Figure 3.3-17 Connector and Purge Fitting Arrangement Details

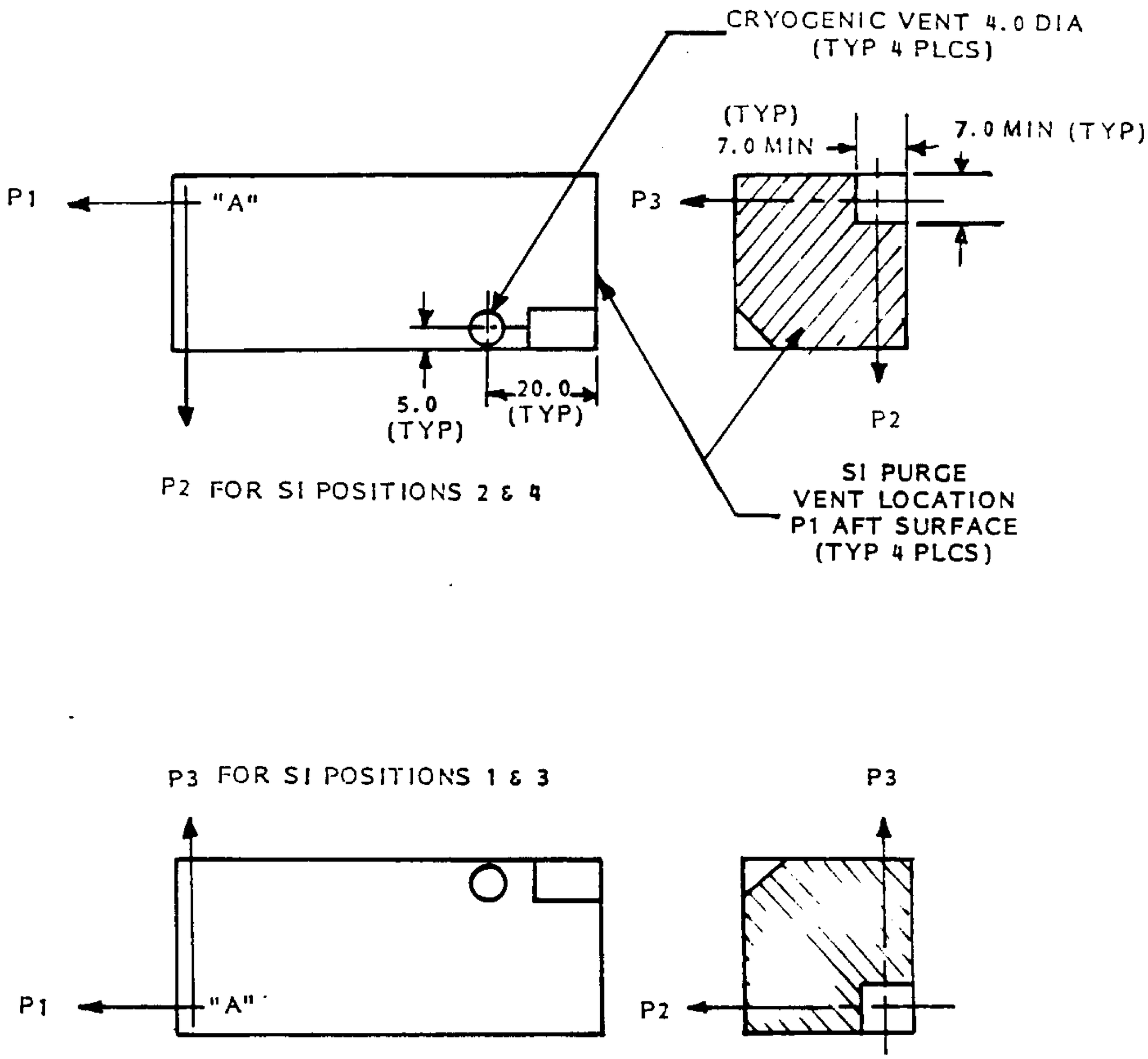

Figure 3.3-18 Axial SI Vent Locations

3.4 Optical Interfaces. The OTA nominal optical prescription interface characteristics are defined below:

Optical Prescription

Primary Mirror	
Radius	11040.000 mm
Conic Constant	-0.0022985
Secondary Mirror	
Radius	1358.000 mm
Conic Constant	-0.49686
Spacing	4906.071 mm
f/Number	24
Aperture	2400.000 mm
Vertex Back Focus	1500.129 mm
Back Focal Distance	6406.200 mm
Magnification	10.435

3.4.1 Optical Throughput. The OTA nominal spectral throughput is given in Figs. 3.1.1.2-1 and 3.1.1.2-2 of STR-02.

3.4.2 Pupil Properties. The OTA entrance pupil shape is as shown in Fig. 3.4-1. The OTA Exit pupil variations are shown below.

EXIT PUPIL VARIATION

NOMINAL ENTRANCE PUPIL LOCATION	NOMINAL EXIT PUPIL LOCATION	IN-ORBIT POSITION RELATIVE TO NOMINAL		IN-ORBIT STABILITY RELATIVE TO NOMINAL	
		DESPACE	DECENTER	DESPACE	DECENTER
(PM BAFFLE) 260.66 *	474.181	±.022	±.022	±.002	±.002
(SM BAFFLE) 409.25	476.396	±.022	±.023	±.002	±.002
(SM VERTEX) 450.652	477.019	±.022	±.023	±.002	±.002

* STATION NUMBERS

3.4.3 Focal Plane Properties. The focal plane scientific field format is shown in STR-02. The field curvatures for sagittal and tangential foci are within the envelopes shown in Figure 3.4-2. The field curvature/astigmatism values are given in Figure 3.4-3.

3.4.4 Stray Light. OTA stray light performance is as defined in STR-02.

3.4.4.1 Aft Shroud Light Leak Environment. The SSM aft shroud structure, with insulation installed, limits internal radiant energy from light leaks (exclusive of that entering the telescope aperture) to 10^{-5} watts/m^2 measured with an S-20 photocathode (approximately 10^{-3} lumens/ m^2). This light level applies at the external surfaces of the SIs where they directly face the SSM structure. Each SI is an opaque enclosure except for its optical entrance aperture and vent opening.

NOTES:

DIMENSIONS ARE IN INCHES
UNLESS OTHERWISE NOTED

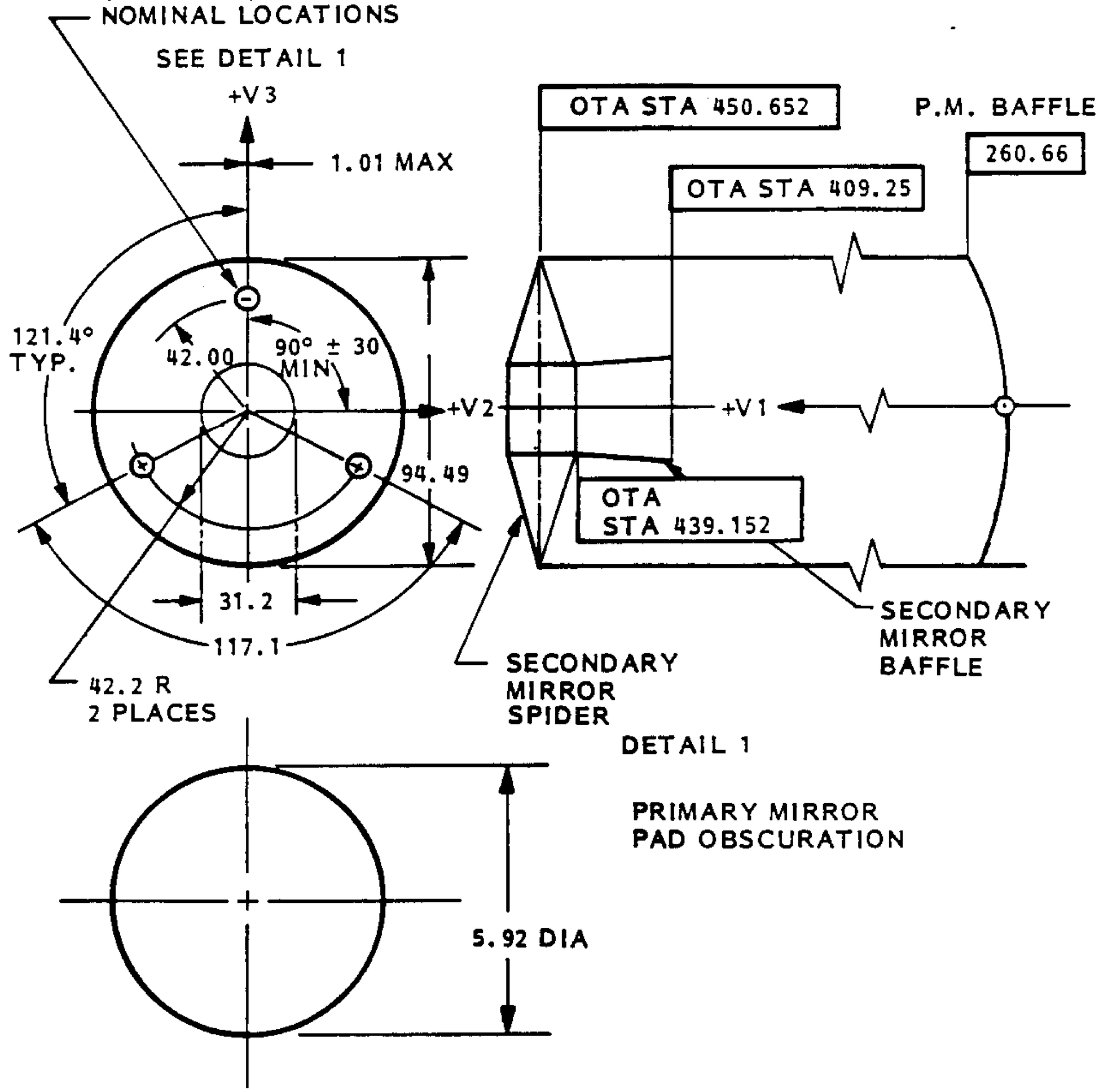

Figure 3.4-1 OTA Entrance Pupil

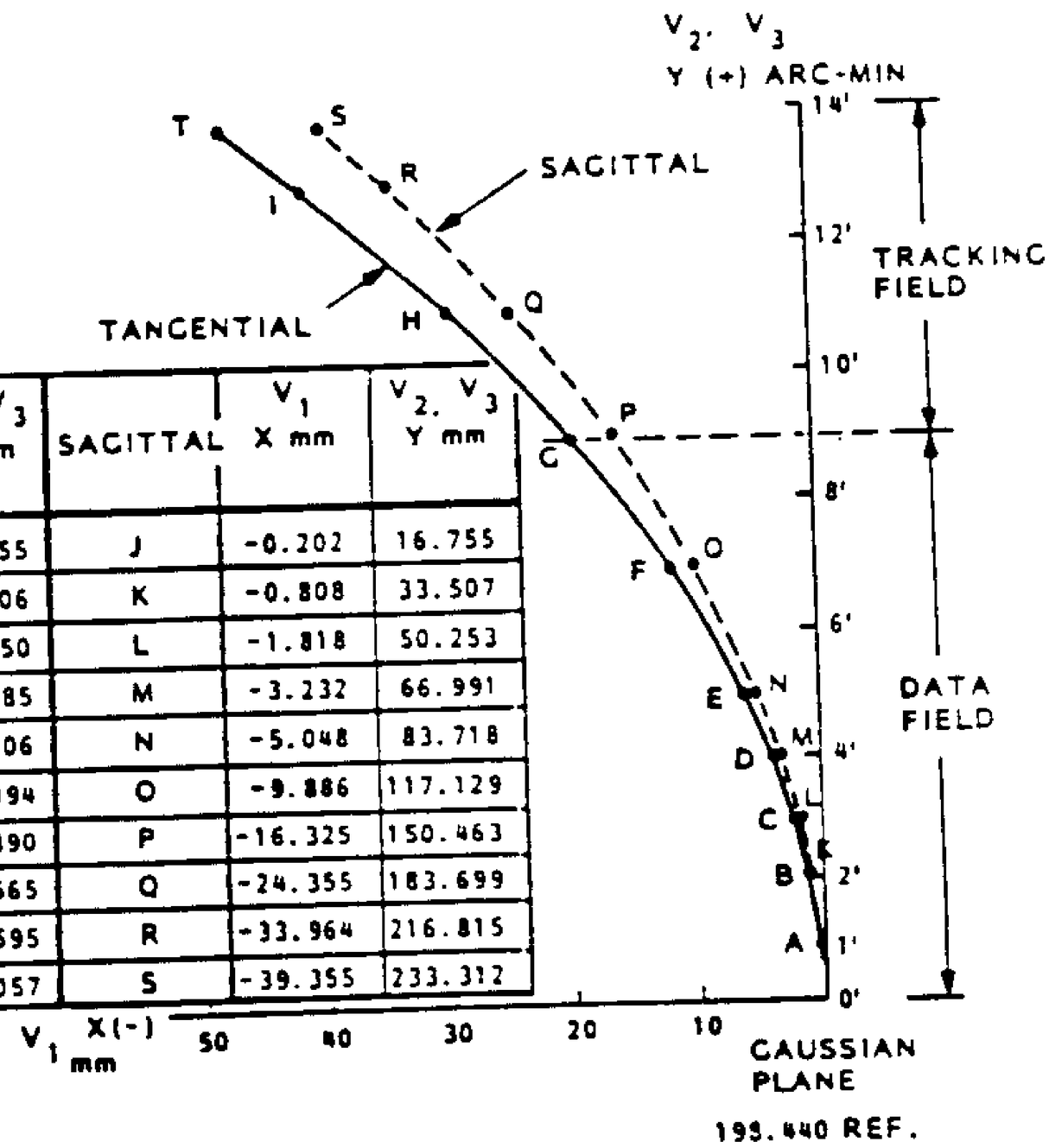

α	TANGENTIAL	V_1 X mm	V_2, V_3 Y mm	SAGITTAL	V_1 X mm	V_2, V_3 Y mm
1.0'	A	-0.244	16.755	J	-0.202	16.755
2.0'	B	-0.976	33.506	K	-0.808	33.507
3.0'	C	-2.195	50.250	L	-1.818	50.253
4.0'	D	-3.902	66.985	M	-3.232	66.991
5.0'	E	-6.095	83.706	N	-5.048	83.718
7.0'	F	-11.939	117.094	O	-9.886	117.129
9.0'	G	-19.719	150.390	P	-16.325	150.463
11.0'	H	-29.424	183.565	Q	-24.355	183.699
13.0'	I	-41.042	216.595	R	-33.964	216.815
14.0'	T	-47.564	233.057	S	-39.355	233.312

IRN 86 (See appendix 10.1)

Figure 3.4-2 Field Curvature Characteristics

(Supersedes pg. 3.4-4 dated 29 June 1984)

FIELD CURVATURE		ASTIGMATISM (SAGITTAL MINUS TANGENTIAL)
FIELD POSITION (ARC MIN)	NOMINAL FOCUS (MM)	NOMINAL ASTIG.* (MM)
0	- .000	.000
1	- .223	.042
2	- .892	.168
3	- 2.007	.377
4	- 3.567	.670
5	- 5.572	1.047
7	-10.913	2.053
9	-18.022	3.393
11	-26.890	5.068
13	-37.503	7.078
14	-43.460	8.209

* Astigmatism variation is ± 0.08mm max. about the nominal.

Figure 3.4-3 Field Curvature and Astigmatism

3.5 Structural Interface

3.5.1 Loads. SIs are to operate within specifications after exposure to the ground, launch, ascent, and 6 fps landing loads.

For a maintenance mission, the loads environment of the SI are no greater than for initial launch, ascent, and landing in the ST.

3.5.1.1 Ground Handling Loads. The ground handling limit loads are 2 g's applied at the SI c.g. and act in any direction.

During 1-g installation of the SIs into the Focal Plane Structure, loads no greater than the loads experienced during in-orbit axial SI changeout operations are experienced by the SI mounted guiderails.

3.5.1.2 SI Latching Loads. Each axial SI is designed to withstand a preload force of 800 + 50 lbs -0 lbs., applied between points B to A. The spring constant of the pre-load mechanism at point B is 330 pound/inch maximum. Preload variation during any 24 hour period in-orbit is ± 25 lbs. Residual moments before rotation at point A is 23 ft-lbs maximum and point "B" is 40 ft-lbs maximum. The maximum moment variation at point "A" for any axial SI due to structural/thermal deformation of a neighboring SI is less than 0.25 ft-lbs in any 24 hour period. The maximum moment variation at point "A" for any axial SI due to structural/thermal deformations of the OTA FPS is less than 0.25 ft-lbs in any 24 hour period.

3.5.1.3 Ground Transportation Loads. When the SI is installed into the OTA, the SI experiences loads no greater than those loads during ground transportation given in paragraphs 3.5.1.4 to 3.5.1.7.

3.5.1.4 Liftoff and Landing Overall Load Factors. The SI liftoff and 6 fps limit landing load factors for the SIs are given in Table 3.5-1. These load factors act through the c.g. and must be multiplied by an applicable factor of safety to use for design analysis.

TABLE 3.5-1. LOAD FACTORS (g's) AXIAL SCIENTIFIC INSTRUMENTS

Loading Cond.	V_1	V_2	V_3	Notes
Liftoff	±4.8	±1.35	±3.21	1, 2
Landing (6 fps)	±1.5	±0.83	±2.59	1, 2
Emergency Land	-4.5	±1.5	-4.5	3,4,5
	+1.5		+2.0	

Notes:

1. Factors are for limit loads and should be multiplied by a factor of safety to obtain ultimate loads.
2. Factors V_1, V_2, V_3 act simultaneously.
3. All load-factors are ultimate.
4. Loads are directed aftward, V_1, within a 20° half cone angle.
5. The load factors operate separately in each direction.

3.5.1.5 Emergency Landing Overall Load Factors. The SI is to survive the emergency loads given in Table 3.5-1. These loads act through the SI c.g.

3.5.1.6 Random Mechanical Vibration. Random mechanical vibration levels at the registration interface (mount points A, B, & C) are given in Figure 3.5-1 and applies only to components directly coupled to these points.

3.5.1.7 Acoustic Loads. The acoustic levels for the axial SI are given in Fig. 3.5-2.

3.5.1.8 In-Orbit Loads. For general in-orbit maintenance operations, the following loads and conditions apply.

3.5.1.8.1 Maximum EV Crewmember Applied Loads on Handholds/Equipment Tethers. All SI handhold/Equipment tether mounting surfaces are designed to withstand an imposed load of 300 lbs ultimate in any direction simultaneously with an applied moment of 75 ft-lbs about any axis at the handhold mounting pad interface.

3.5.1.8.2 SI Guide Rail Loads. During SI in-orbit changeout the guiderails attached to the SI can be subjected to a crewmember imposed load of 100 pounds (limit). IRN 67

3.5.1.8.3 Connector Loads. The maximum load applied at the connector interface is 300 lbs ultimate in any direction and a torque of 50 in-lbs in the plane of the connector plate.

(Supersedes pg. 3.5.3 dated 29 June 1984)

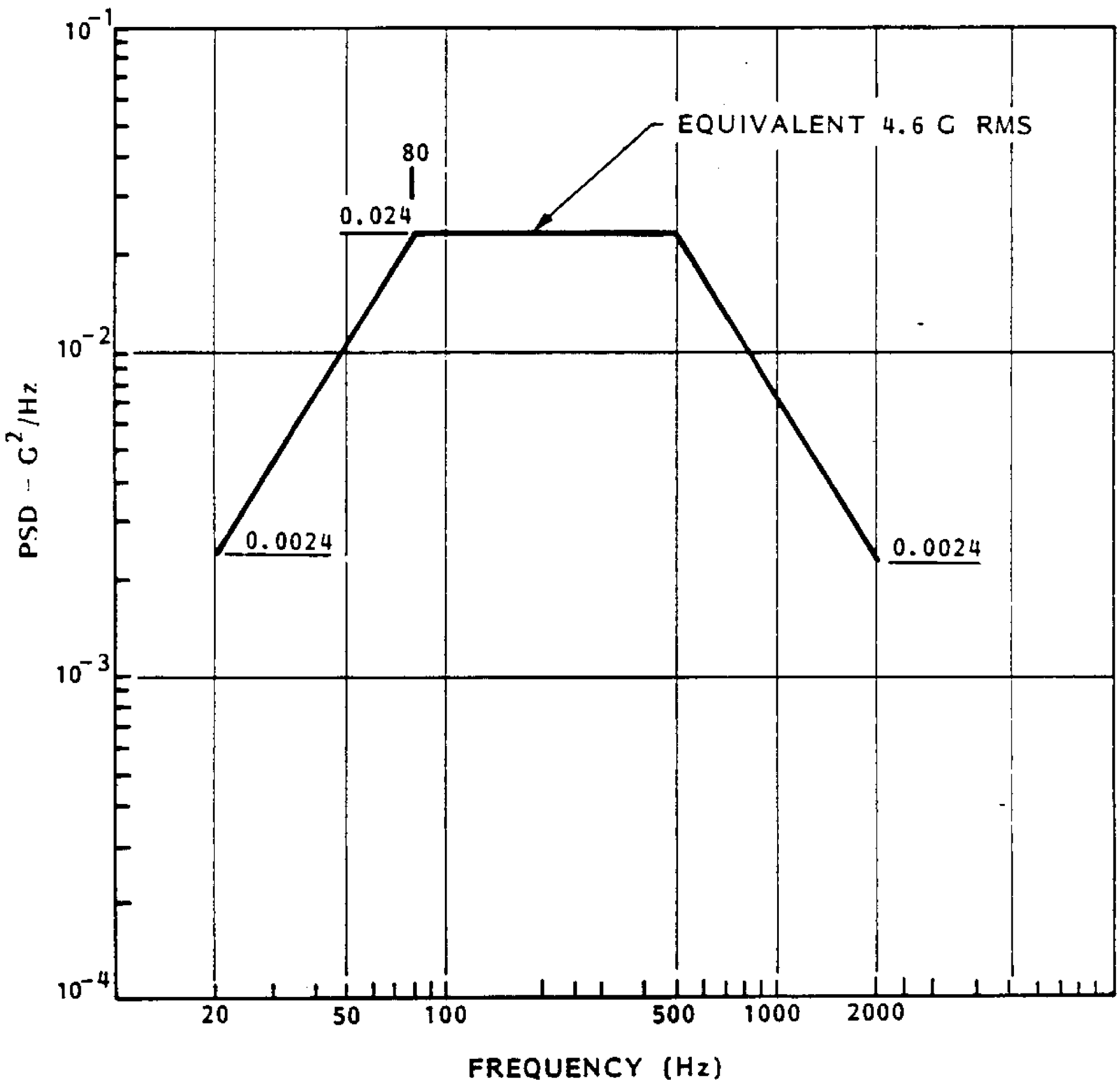

Figure 3.5-1 Mechanical Random Vibration at OTA/SI Interface

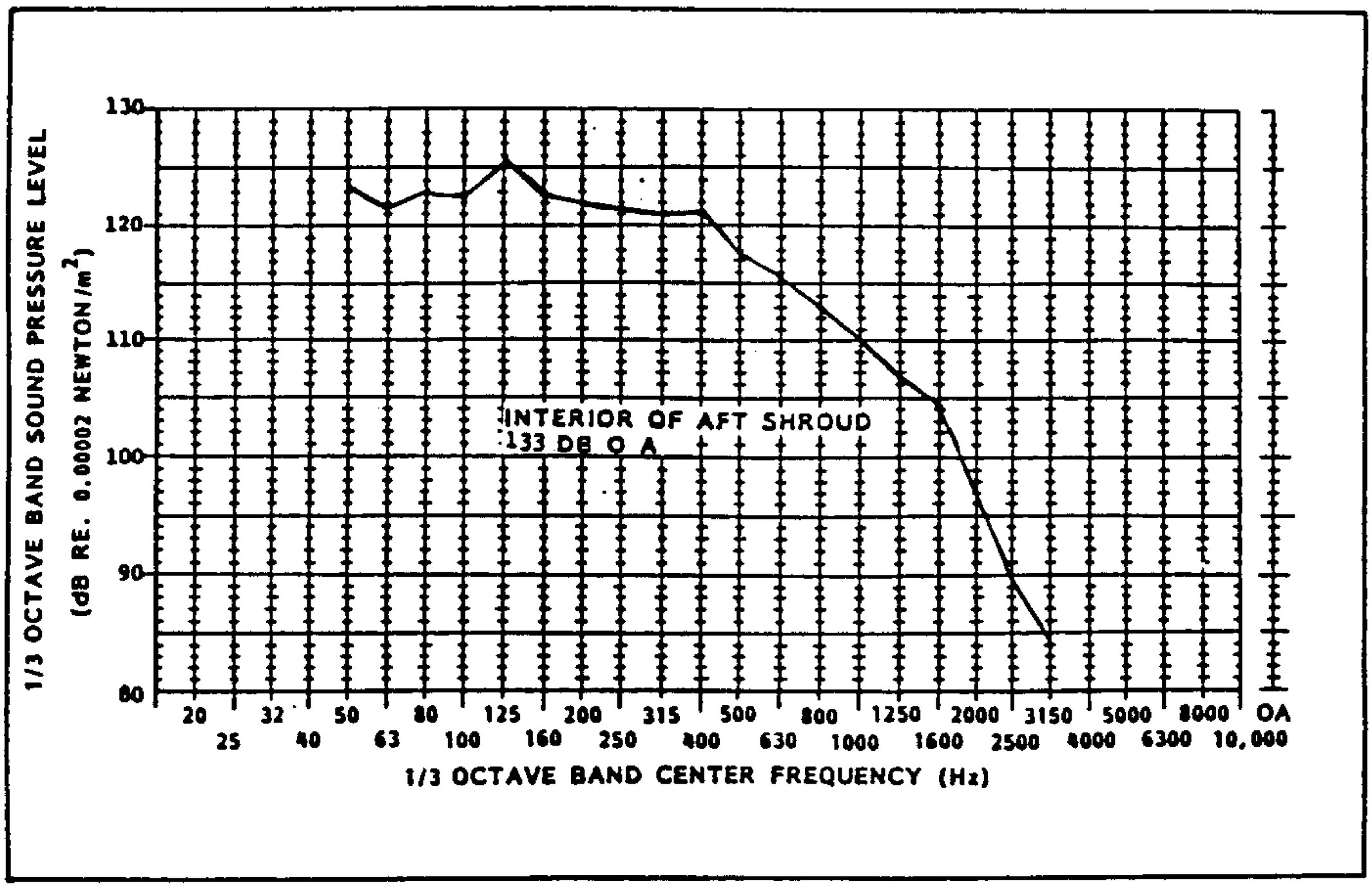

IRN 77

LMSC
RELEASED
CONTROLLED

Figure 3.5-2 Axial SI Acoustic Levels During Ascent

(Supersedes pg. 3.5-5 dated 29 June 1984)

3.5.2 Structural Characteristics. Axial stiffness (in P1 direction) of the SI structure between support points A and B is not less than 75,000 lb./in. The optical bench and exo-structure lateral stiffness is such that the generalized mass of the first two lateral modes taken individually fall below the curve of 3.5-3. Generalized mass is defined as follows:

$$\bar{M} = \{\phi\}^T \left[M\right] \{\phi\}, \phi_{imax} = 1$$

$\{\phi\}$ = eigenvector of a given mode
$\left[M\right]$ = mass matrix of a discretized structural model
T = Superscript indicates a transposed matrix

Where the first mode is predominantly torsion (coupled in the two lateral directions) the generalized mass is defined as follows:

$$\bar{M} = \sum_i M_i \quad (\phi_{iP2} + \phi_{iP3})$$

Where ϕ_{iP2} and ϕ_{iP3} are the eigenvectors of the ith mass point for the nth mode (in this case the first mode) in the P2 and P3 directions. The requirements of Figure 3.5-3 apply.

Vibration modes are calculated neglecting flexibility in the latching mechanisms.

3.5.2.1 SI/OTA Latch Flexibility. The nominal stiffness characteristics that include both sides of the OTA contractor supplied latches at Points A, B and C are as follows:

Mount Point 'A'

P1 = 245,000 lbs/in tension, P1 = 245,000 lbs/in compression
P2 = 222,000 lbs/in
P3 = 117,000 lbs/in

IRN 68

(Supersedes pg. 3.5-6 dated 29 June 1984)

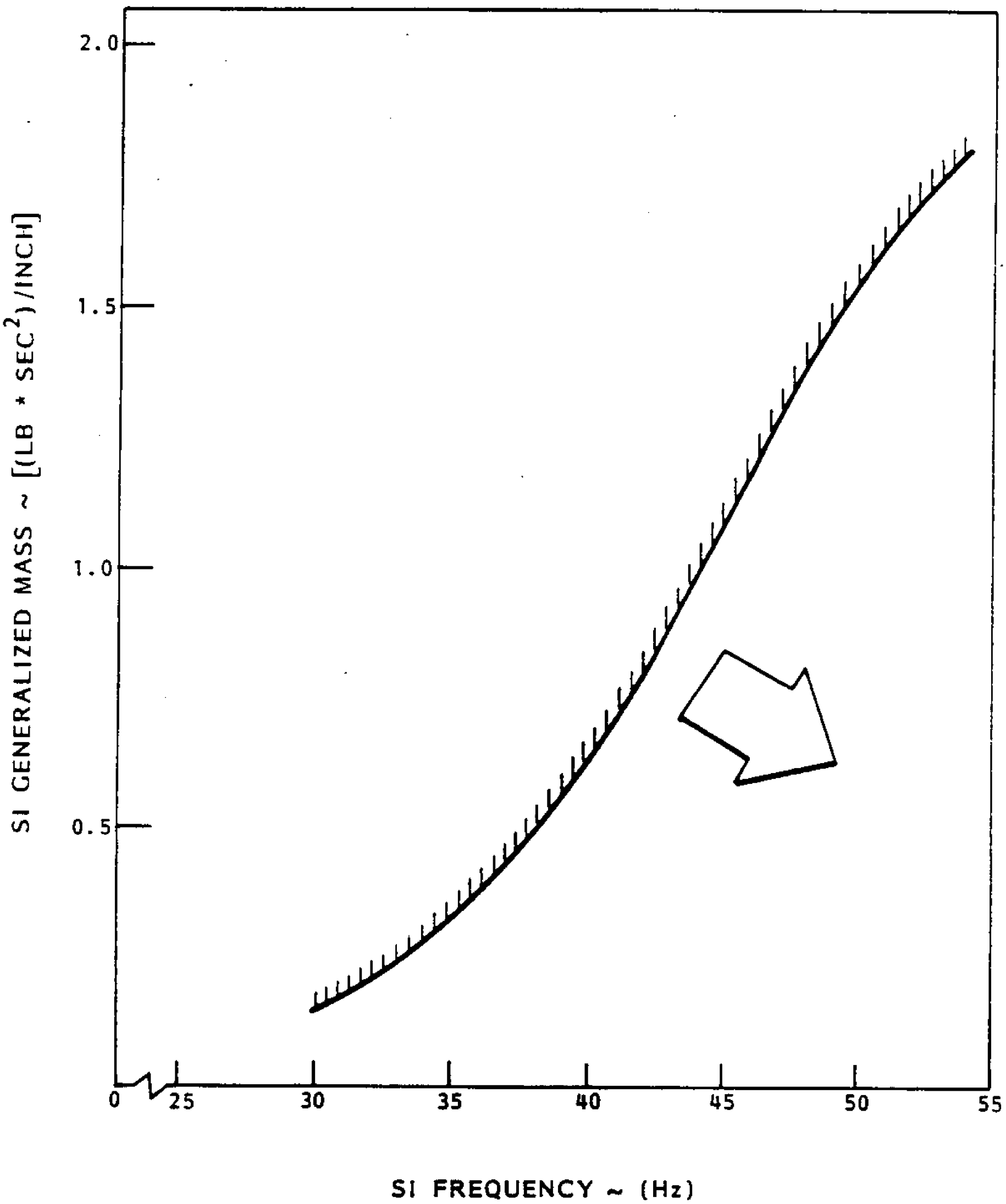

Figure 3.5-3 SI Generalized Mass Vs SI Mode Frequency

Mount Point 'B'

P1 = Preload

P2 = 114,000 lbs/in

P3 = 66,000 lbs/in

IRN 68

Mount Point C

45° bisector to P2 and P3

Flexure = 8000 lb/in (preload 30 lbs)

Fitting = 158,000 lbs/in

3.5.3 Mass Properties

3.5.3.1 Weight. The maximum weight of any single axial SI is 700 lbs. (318 Kg.). The weight of each SI is measured to within ± 5 lbs. prior to installation into ST. The weight of ST supplied hardware items which are not included within the SI weight budget but which must be accounted for in the SI mass properties reporting is:

IRN 74 (see appendix 10.3)

Connectors 6 @ .12 lbs.	.84 lbs. (includes ground strap)
Guiderails	3.0 lbs.
Forward registration fitting	5.7 lbs.
Rear registration fitting	5.7 lbs.
Tangential registration fitting	3.0 lbs.
Handles	4.0 lbs.
Purge Fitting	0.2 lbs.

3.5.3.2 Center of Gravity. Each axial SI c.g. is within the volume defined by the coordinates:

IRN 66 (see appendix 10.1)

P1 = -30.00 to -42.80 inches

P2 = 12 ± 5 inches

P3 = 12 ± 5 inches

(Supersedes pg. 3.5-8 dated 20 November 1984)

The location of the c.g. for each SI is determined and marked on the +P2 and +P3 surfaces to within ± 0.25 inches of true location prior to installation within ST. The c.g. marking is "⊕CG" with block letters 1" high and a 1" diameter symbol.

3.6 Environmental Interface. The SI environmental conditions of thermal, contamination, magnetics, SSM internal pressure, ionized particle radiation, meteoroid and humidity are specified below.

3.6.1 Thermal Interfaces.

3.6.1.1 Operational Thermal Interface. The thermal environment for in-orbit ST science mission operation is controlled by a balance between the heat generated by the combined OTA/SSM and SIs, and the heat radiated to space by the SSM aft shroud. Thermal radiation is permitted from the SIs in either or both $\pm$V2 and $\pm$V3 directions from the SI +P2 and/or +P3 faces within the limits discussed in paragraph 3.6.1.1.3.1 below.

3.6.1.1.1 Mount Point Conductance. At each of the three attachment points (A, B, C in Figure 3.3-1) the following conditions are maintained during science orbital operations:

a. The temperature at the OTA side of each attachment fitting is within the range 21°C $\pm$ 1°C.

b. The maximum effective thermal conductance of each attachment fitting provided by the OTA is as follows:

Point A Fitting:	0.050 W/°C
Point B Fitting:	0.080 W/°C
Point C Fitting:	0.050 W/°C

c. The temperatures of the SI surface to which each OTA attachment fitting is mounted, is within the range -20°C to +20°C and the variation during a single exposure (or 24 hours, which ever is less) is a maximum of 4°C. The 4°C limit applies to the operating SI and only if the operating SI requires full OTA focus and image stability compliance.

3.6.1.1.2 Electrical Cable, Ground Strap and Purge Line Conductances. Cable and ground strap effective conductances (K) each do not exceed 0.1 watt/°C where heat loss (Q) is defined as:

$Q = K.(T_{SI} - \overline{T})$

T_{SI} = SI temperature at the cable, ground strap, or purge line attach point

T_{SINK} = SSM Effective sink temperature. The T_{SINK} for the groundstrap cabling and purge lines is -15°C for hot case and -51°C for cold case.

$$\overline{T} \begin{cases} = 1/2\ (T_{SI} + T_{SINK}) & \text{(for cable heat loss calculations)} \\ = T_{SINK} & \text{(for ground strap and purge line heat loss calculations)} \end{cases}$$

The purge line effective conductance is equal to or less than 0.01 w/°C.

3.6.1.1.3 Radiative Heat Transfer.

3.6.1.1.3.1 Obscurations and Surface Characteristics. The FPS thermal barrier and FPS obscurations and surface characteristics are shown in Fig. 3.6-1.

The ±V3 direction view of the SI enclosure to the SSM wall is obscured by the FPS, and the -V3 direction view is obscured by the equipment shelf containing FHSTs and RSUs , which are included in the effective sink temperatures.

The SIs exhibit the exterior structure temperatures and surface properties shown in Fig. 3.6-2, during ST science mission operations.

3.6.1.1.3.2 Effective Sink Temperatures. The radiative heat transfer environment in the SSM aft shroud compartment is defined in terms of "effective sink temperatures" which combine the various thermal contributions including the -V3 equipment shelf, into a single parameter which represents

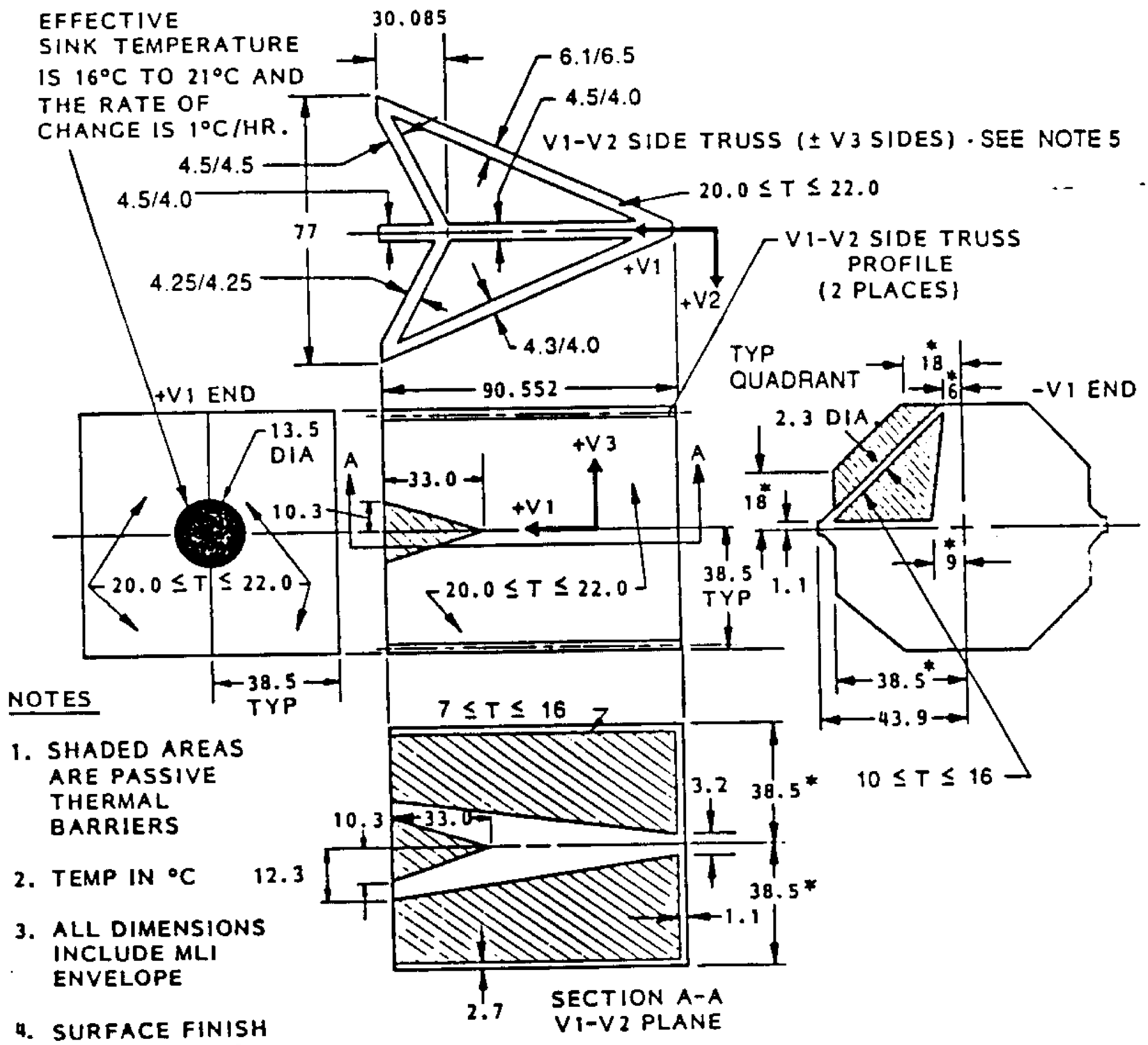

NOTES

1. SHADED AREAS ARE PASSIVE THERMAL BARRIERS
2. TEMP IN °C
3. ALL DIMENSIONS INCLUDE MLI ENVELOPE
4. SURFACE FINISH UNLESS NOTES
   - $\epsilon \geq 0.8$
   - $0.01 < \epsilon^* \leq 0.05$
   - $\alpha > 0.8$
5. DIMENSIONS FOR V1-V2 SIDE TRUSS ARE FOR +V3 SIDE /-V3 SIDE

* DIMENSIONAL TOLERANCE ± 0.125 (7 PLACES)

Figure 3.6-1 OTA FPS Thermal Configuration

(SUPERSEDES PAGE 3.6-3 DATED 27 AUGUST 1984)

IRN 098

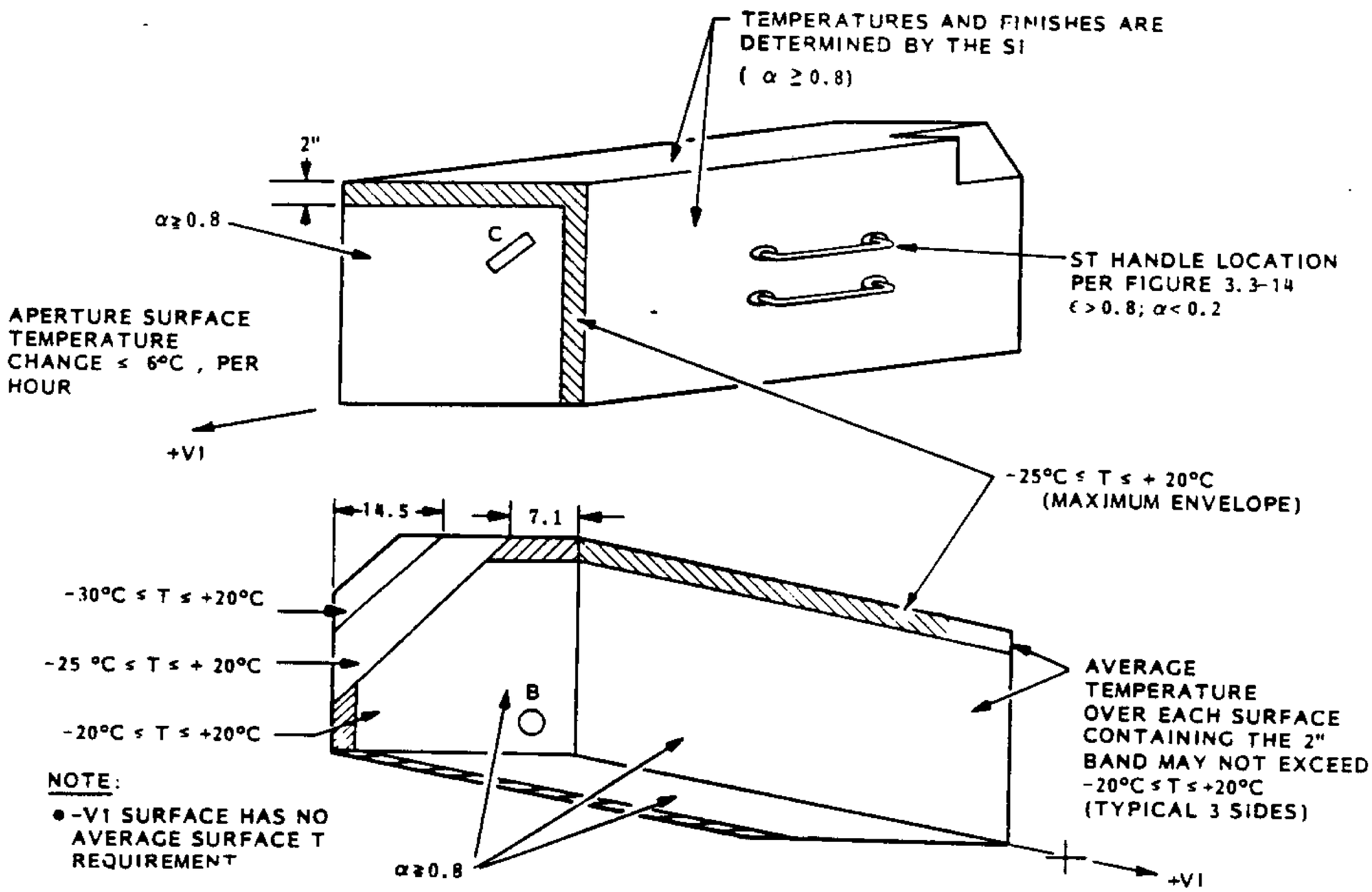

Figure 3.6-2 SI Exterior Surface Temperature and Properties

the temperature of a uniform thermal sink (black surface) to which the SI radiator emits the same radiative flux (Q) at the same radiator temperature (T). The effective sink temperature (T_{SINK}) for a given SI radiator is to be used in the relationship:

$$Q = \varepsilon A \sigma (T^4 - T^4_{SINK})$$

Where ε and A are the emissivity and area of the SI node surface, and σ is the Stefan-Boltzmann constant.

The effective sink temperature ranges for an axial SI in the Operational and Hold modes are defined in Fig. 3.6-3. The values shown in Fig. 3.6-3 represent the orbital average effective sink temperatures averaged for all the nodes on the particular SI surface.

The operational effective sink temperatures shown in Fig. 3.6-3 (1 and 2) define the radiative environment for an SI which complies with the Operational Power constraints specified in section 3.6.1.1.4.

The Hold temperatures in Fig. 3.6-3 represent the cold case temperatures for these power modes. For a constant power dissipation from each SI (constant in time and distribution) the orbital fluctuation in the effective sink temperatures is less than $\pm 8^{\circ}$C. For time varying power dissipations up to the maximum SI power levels defined in section 3.6.1.1.4 (20% over orbital average, 50% duty cycle) the orbital fluctuation in the effective sink temperatures is less than $\pm 12^{\circ}$C.

The effective sink temperature of any individual node in Fig. 3.6-3 (1 and 2), on the SI surface will vary from T_{HOT} and T_{COLD} by no more than the values shown in Fig. 3.6-3 (3). The maximum difference in the effective sink temperatures of any two nodes on the same SI surface is less than or equal to the peak-to-peak values shown in Fig. 3.6-3 (with the $\pm$V2 or $\pm$V3 SI surface temperature increasing in the forward (+ V1) direction). The maximum difference

	$+V_3$	$-V_3$	$\pm V_2$	$-V_1$
HOT OPERATION	-14	-14	-21	+7
COLD OPERATION	-37	-32	-43	-17
COLD HOLD	-38	-36	-44	-20
HOT OPERATION GRADIENTS	± 3	± 3	± 2	-9
COLD OPERATION AND HOLD GRADIENTS	± 3	± 5	± 3	+12

ALL TEMPERATURES ARE AVERAGED OVER THE ENTIRE SURFACE, AND AVERAGED OVER THE ORBIT.

GRADIENTS ARE OVER THE ENTIRE SURFACE.

$-V_1$ TEMPERATURES AND GRADIENTS ARE FOR THE WORST NODE.

Figure 3.6-3 Effective Sink Temperature (C^o) Distribution-Non Applicable to FOC

in the effective sink temperatures as seen by any two nodes anywhere on the SI surface is less than or equal to 20°C with the ±V3 axes' sink temperatures warmer than the ±V2 axis' sink temperatures.

3.6.1.1.4 Thermal Power. The SIs have three different power modes during ST Science Mission Operations.

3.6.1.1.4.1 Thermal Power Mode Definitions. The SI power modes are defined as follows:

Power Mode	Thermal Definitions
Operational	SI components within operating temperature limits and preserve interface temperature
Hold	SI components achieve operational mode in less than 2 orbits and preserve interface temperatures. (DAR FOC 008)

IRN 96

3.6.1.1.4.2 Thermal Power Mode Constraints. The SI power constraints for each of these modes are as follows:

Power Mode	Constraints
Operational	Not to exceed 150 watts/SI average power per orbit including RM 174 watts/SI maximum sustained power including RM (But not to exceed 150 Watts avg/orbit)
Hold	Not to exceed 58 watts/SI average power per orbit including RM

IRN 65 (see appen 10.1)

The transition from hold mode to operational mode has operational power constraints. These thermal constraints on SI power are in addition to the electrical constraints of Section 3.7.

LMSC PROPERTY CONTROLLED

(Supersedes pg. 3.6-7, IRN 65, no date)

3.6.1.1.4.3 Normal Science Mission Thermal Power Configuration. The aft shroud compartment radiative heat transfer interface as defined in Section 3.6.1.1.3 is based on a normal science mission configuration for the SIs which consists of:

One axial SI at operational power
Three axial SIs at hold power
One radial SI at operational power

However, this does not specifically prohibit operations that include having the radial SI and more than one axial SI at operate power simultaneously, as long as all equipment within the aft shroud remains within acceptable temperature limits. IRN

The number of SIs that can be in operate mode simultaneously is also limited by power constraints, and will be an operational decision based on the electrical power system load capability as well as thermal considerations.

3.6.1.2 Non-Operational Thermal Interfaces. The non-operational modes occur when no science mission operations are being conducted; however, the SI's must be able to be returned to an operate condition. There is no requirement for the SI to maintain the interface temperatures. The OTA & SI interface temperatures are greater than 20°C except for safing when the OTA and SI interface temperatures are greater than-25°C.

3.6.1.2.1 Pre-Flight. The pre-flight environments include transportation, storage, prelaunch, and ground testing.

LMSC RELEASED CONTROLLED

3.6.1.2.1.1 Transportation and Storage. Ref: IRD STR-02.

3.6.1.2.1.2 Prelaunch and Ground Testing. Ref.: IRD STR-02

3.6.1.2.2 Flight. The non-operational flight modes are defined as launch, ascent, initial deployment, unscheduled maintenance, retrieval, scheduled maintenance, orbiter re-entry and return to earth, post landing and safing.

3.6.1.2.2.1 Launch and Ascent. Lift-off effective sink temperatures are between 21°C and 25°C.

3.6.1.2.2.2 Initial Deployment. In initial deployment, power to the SIs is available within 7 hours from launch. The ST is removed from the Orbiter Cargo bay 26 hours after launch. The minimum effective sink temperatures with time are given in the following list. IRN

(Supersedes pg. 3.6-8 dated 6 February 1987)

Sink Temperatures (°C)

Time (Hours)	Second Day V3 Side	Second Day V2 Side	Second Day -V1 End
0	21.1	21.1	21.1
1.0	21.1	21.1	21.1
2.0	3.9	-2.7	14.4
3.0	-2.5	-9.1	8.0
4.0	-8.9	-15.0	2.2
5.0	-11.8	-17.7	-2.0
6.0	-37.4	-43.5	-11.4
7.0	-47.0	-50.1	-19.6
8.0	-49.8	-49.6	-25.8
9.0	-54.2	-59.1	-31.0
10.0	-56.7	-56.4	-35.1
11.0	-57.8	-59.7	-38.2
12.0	-59.8	-62.9	-40.8
13.0	-60.3	-58.1	-43.0
14.0	-61.6	-65.4	-44.7
15.0	-63.8	-64.4	-46.6
16.0	-23.0	-27.7	-19.1
17.0	-24.3	-29.1	-20.0
18.0	-25.3	-29.9	-20.6
19.0	-23.7	-28.3	-20.8
20.0	-25.8	-30.3	-21.6
21.0	-25.4	-29.9	-21.9
22.0	-25.1	-29.6	-22.2
23.0	-27.4	-31.8	-23.0
24.0	-25.7	-30.1	-23.0
25.0	-26.8	-31.2	-23.5
26.0	-27.3	-31.6	-23.8
27.0	-41.2	-51.2	-28.2
28.0	-47.0	-54.5	-32.4
29.0	-49.2	-53.7	-36.2
30.0	-52.7	-62.3	-39.5
31.0	-53.8	-58.0	-41.9
32.0	-55.6	-62.0	-44.3
33.0	-57.0	-64.5	-46.0
34.0	-56.8	-59.0	-47.3

IRN 90

(Supersedes pg. 3.6-9 dated 29 June 1984)

Initial Hot Deployment. In initial deployment communication and power can be available as early as 4 hours from launch. The maximum SI effective sink temperatures while in the orbiter cargo bay are given in the following list. After the ST is removed from the orbiter cargo bay the maximum temperatures will be lower than a hot operate case. IRN 81

Time (Hours)	Sink Temperatures (degrees C) V3/V2	V1
.0	21.1	21.1
1.0	21.1	21.1
2.0	7.9	19.9
3.0	11.8	18.3
4.0	8.0	16.6
5.0	3.5	18.8
6.0	7.6	19.0
7.0	4.8	18.9
8.0	5.1	18.9
9.0	7.8	18.6
10.0	4.2	18.4
11.0	5.2	18.2
12.0	7.0	17.9
13.0	2.2	17.6
14.0	4.5	17.3
15.0	5.8	16.9
16.0	3.0	16.8
17.0	5.2	16.6
18.0	5.1	16.3
19.0	2.8	16.2
20.0	5.5	16.1
21.0	2.8	15.7
22.0	2.1	15.6
23.0	5.6	15.4
24.0	3.1	15.2
25.0	2.8	15.2
26.0	5.8	15.0
27.0	2.6	14.9
28.0	3.1	14.9
29.0	3.7	14.7

IRN 85

(Supersedes pg. 3.6-9a dated 16 December 1985)

3.6.1.2.2.3 Retrieval. The SI effective sink temperatures during ST retrieval are between -50°C and 0°C, except for -V1 end which is -30°C/+20°C. During retrieval, when power is available, the power provided will be hold mode power. Additional power is provided, if available, to prevent damage. The maximum time power off during retrieval is 3 (three) hours.

3.6.1.2.2.4 Scheduled Maintenance. The SI effective sink temperatures during ST maintenance are between -50°C and 0°C. During maintenance when power is available the power provided will be hold Mode Power. Additional power is provided to prevent damage. The maximum time power is off is 6 hours. The minimum time power is on prior to the power off period is 18 hours. Total scheduled Maintenance Mode is a maximum of 7 days.

3.6.1.2.2.5 Safing. The SI effective steady state sink temperatures during ST Safing Condition (ST in sun pointing orientation) are between -50°C to -20°C, except for -V1 end which is -30°C/0°C. During the transition from hold or operate mode to safe mode, the effective sink temperature is defined by:

$$\frac{T - T_o}{T_s - T_o} = 1 - e^{-\sqrt{0.25t}}$$

Where T = sink temperature at time t

T_o = sink temperature at time t = o (Ref Fig 3.6-3)

T_s = sink temperature in safe mode

t = elapsed time from entering safe mode (Hr)

SIs are limited to hold power during safing. SI electronic boxes are a minimum of -40°C prior to being turned on after safing.

3.6.1.2.2.6 Entry. The SI effective sink temperatures during entry are between -50°C and 50°C, except for the -V1 end, which are between -30°C and 40°C. The entry period is a maximum of 45 minutes.

3.6.1.2.2.7 Post Landing. The SI effective sink temperatures during Post-Landing are between 10°C and 32°C after 4 hours from start to entry.

3.6.1.3 Contingency Retrieval. Contingency retrieval is a mode after which the ST is in gravity gradient orientation and is not required to be returned to science mission operations. The SI effective sink temperatures during contingency retrieval are between -65°C and -40°C. SIs are limited to hold power. The contingency mode is limited to 45 days.

3.6.2 Magnetic Environment. The cumulative magnetic field on an SI is obtained by adding the fields given below.

3.6.2.1 Magnetic Fields. All axial SI components are subjected to the following magnetic fields without any degradation in their performances:

a. The earth's magnetic field which is composed of a maximum time varying component of 0.33 gauss and a constant component of 0.21 gauss with a subtended angle of 65 degrees.

b. A time varying magnetic field generated by magnetization of soft magnetic materials and by electromagnetic devices within the ST as given in Fig. 3.6-4. This field is in addition to the earth's field.

c. A magnetic field that remains fixed with respect to the ST axes for any ST orientation as given by Fig. 3.6-5. This field is in addition to the earth's field.

3.6.2.2 SSM and SI Magnetic Field Intensity. The maximum magnetic field caused by the SI in any orientation at the SI envelope does not exceed 0.8 gauss. The maximum total magnetic field caused by the SSM in any orientation within the SIs volume shall not exceed 0.2 gauss.

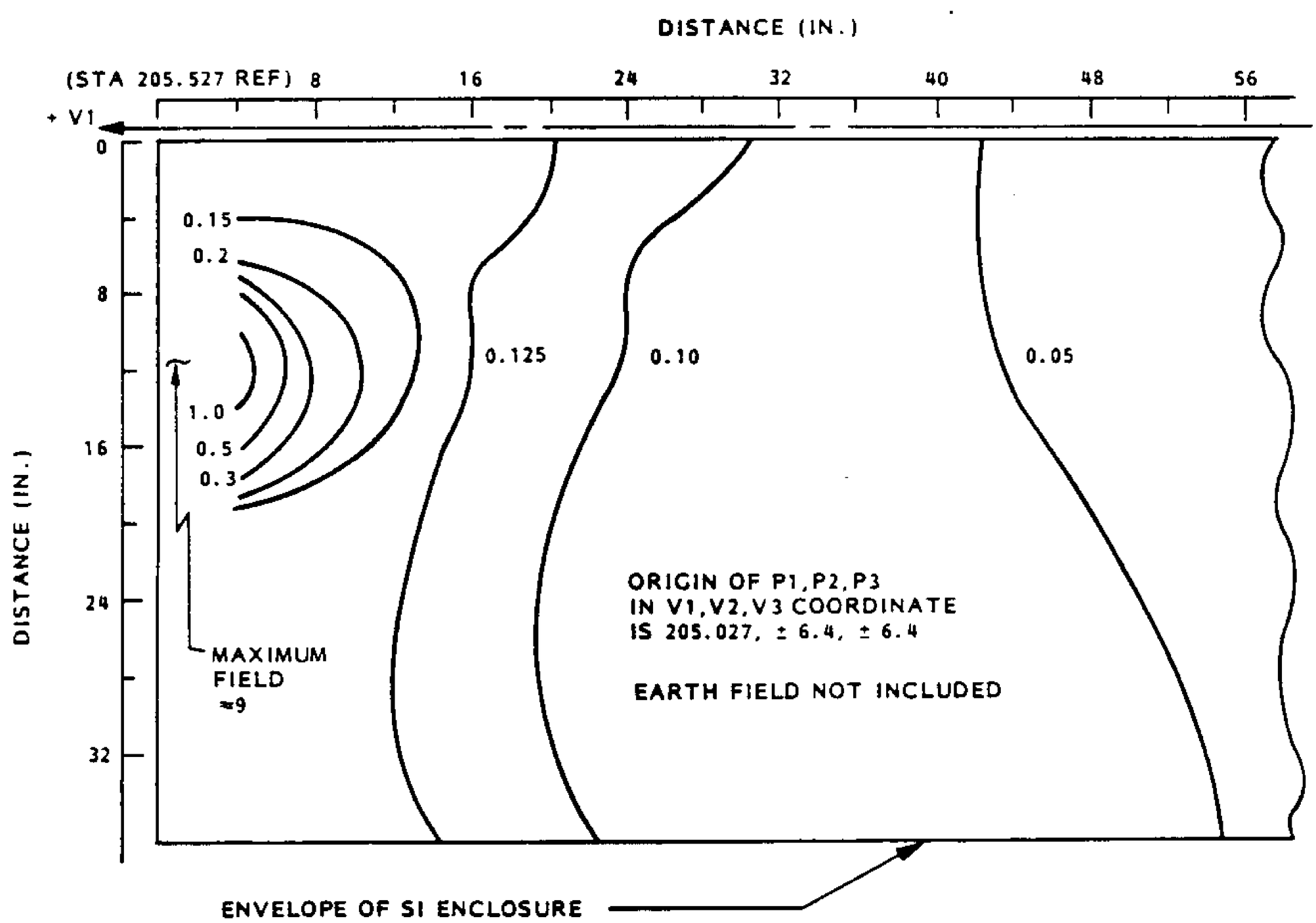

Figure 3.6-4 Time Varying-Magnetic Field at Axial SI in Gauss

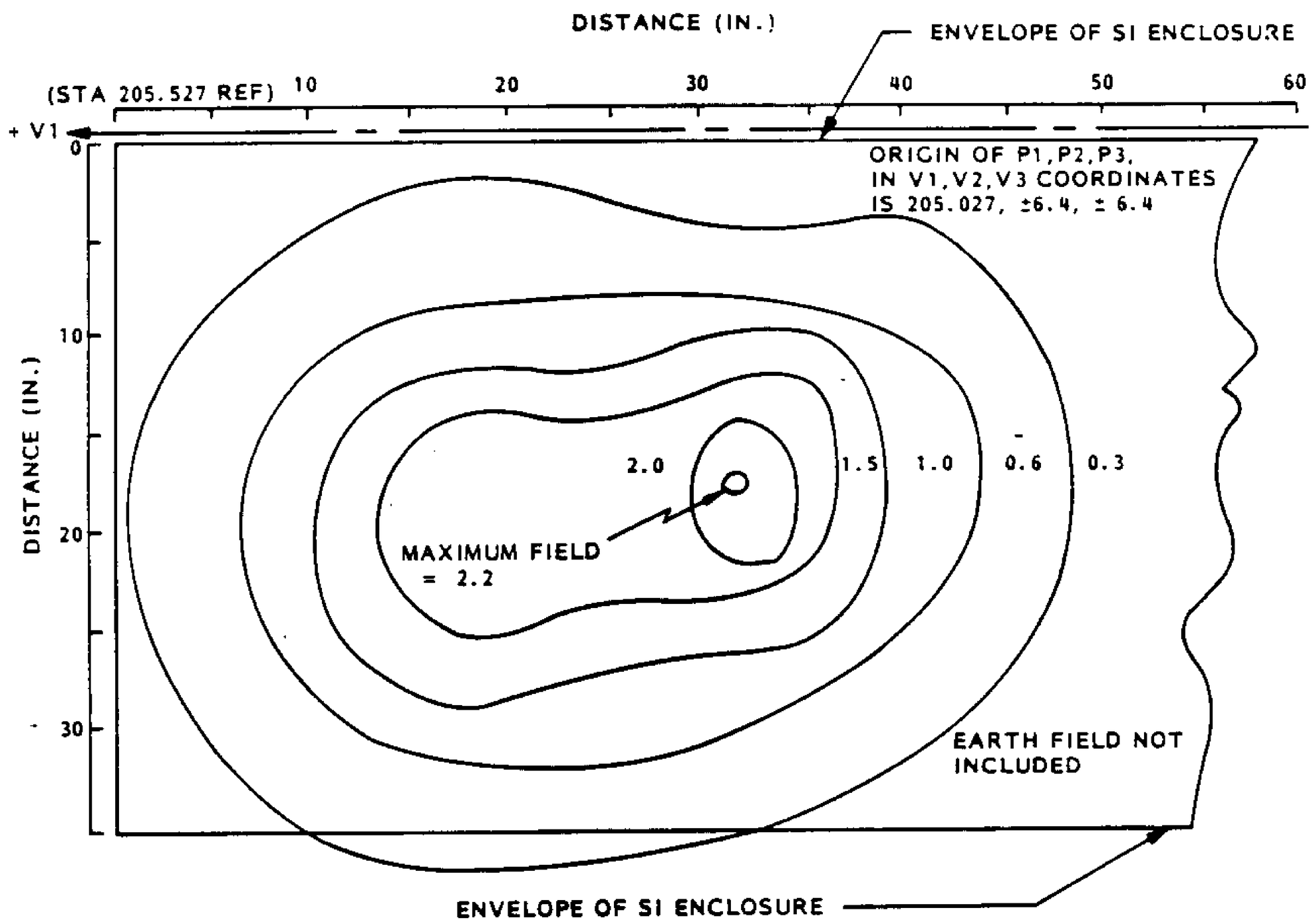

Figure 3.6-5 Fixed Magnetic Field at Axial SI in Gauss

3.6.2.3 OTA Magnetic Field Intensity. The maximum magnetic field generated by the OTA at any ST attitude orientation when operating in the earth's magnetic field does not exceed the levels specified below.

a. A level of 1.0 gauss time-varying field at the boundary of the envelope allocated to the axial SI as shown in Fig. 3.3-1 but bounded by the VI station plane 198.44 and the aft end of the SI(-VI).

b. A level of 0.1 gauss constant magnetic field at the boundary of the envelope allocated to the axial SI as shown in Fig. 3.3-1.

3.6.3 Contamination Control.

3.6.3.1 Volumetric Cleanliness. The contamination environment to which the SIs are subjected during all ground operations and during ascent and orbital operations is class 10K volumetric cleanliness per Figure 3.6-6. This cleanliness requirement does not apply during reentry and landing.

3.6.3.2 Surface Cleanliness. The external surfaces are visibly clean when examined under oblique white light of 100 to 125 foot candles intensity from a distance of approximately 16.0 inches.

3.6.3.3 Material Outgassing. Each non-metallic material used must have a Total Mass Loss of less than 1% and a Collected Volatile Condensible Materials of less than 0.1% when tested under the following conditions. Material temperature shall be $125^{\circ}C \pm 1\ ^{\circ}C$, collector plate temperature at $25^{\circ}C \pm 1^{\circ}C$, pressure at 5×10^{-5} torr or less and vacuum exposure time of 24 hours.

3.6.4 Ionizing Particle Radiation. The omni-directional ionizing particle environment within the aft shroud is specifed in Table 3.6-1.

3.6.5 Meteoroid. Meteoroid protection is supplied by the SSM as defined in IRD STR-02.

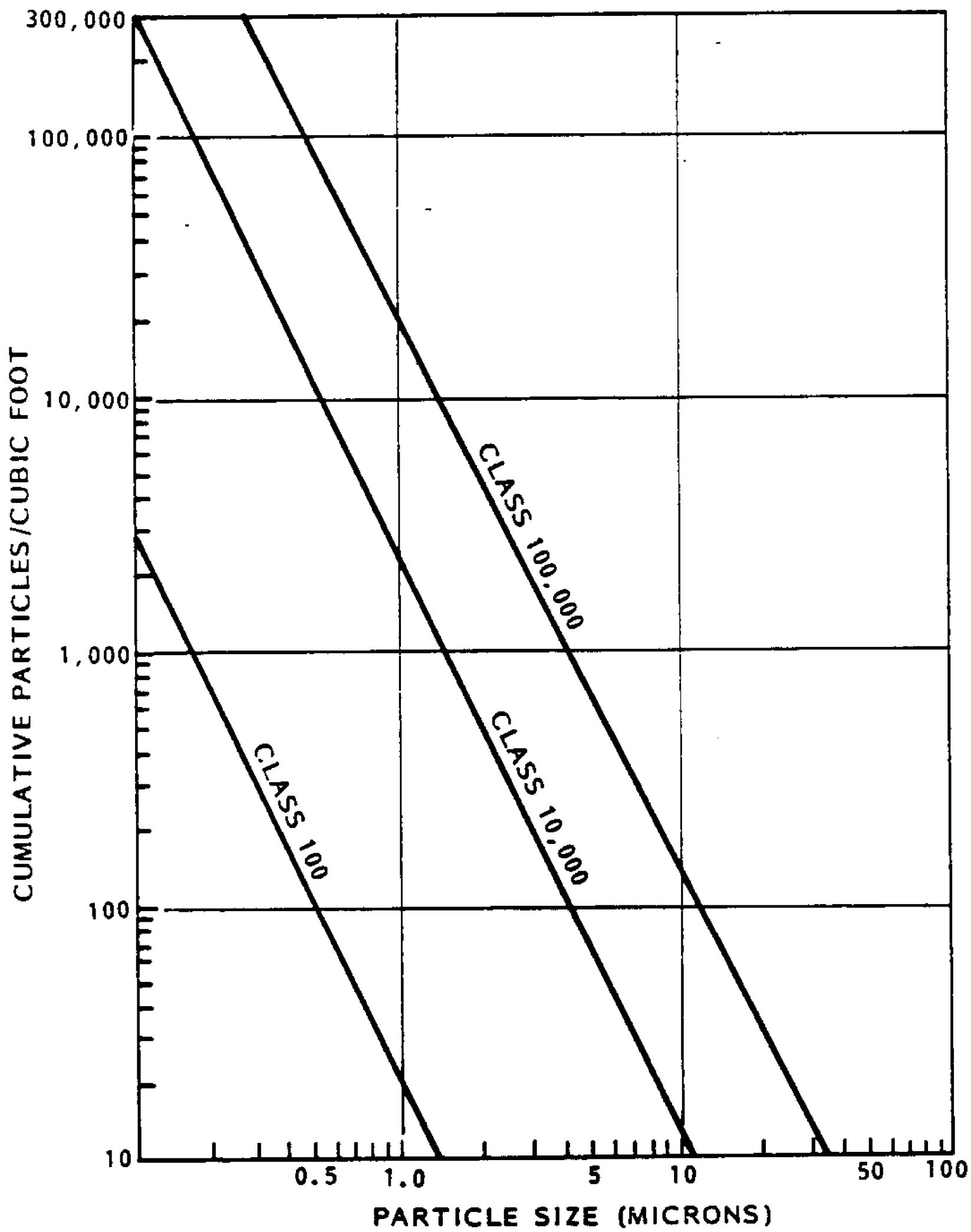

Figure 3.6-6 Particle Size Distribution Curves

TABLE 3.6-1

MAXIMUM INTERNAL IONIZING PARTICLE RADIATION

AFT SHROUD

Trapped Electrons

Cumulative Fluence:	1.2×10^{10} e/cm^2:	E>0.5 MeV
	6.3×10^{9}	1
	1.2×10^{9}	2
	1.95×10^{8}	3
	2.08×10^{6}	4

Trapped Electron Ionizing Dose: 6.5×10^{2} rads(Si)
Maximum Electron Flux: 1.35×10^{4} e/cm^2-sec: E>0.5 MeV
Maximum Dose Rates: 7.3×10^{-4} rads(Si)/sec

Trapped Protons

Cumulative Fluence:	2.2×10^{10} p/cm^2:	E>4 MeV
	2.03×10^{10}	10
	1.91×10^{10}	20
	1.78×10^{10}	40
	1.12×10^{10}	100

Trapped Proton Ionizing Dose: 4.3×10^{3} rads(Si)
Maximum Proton Flux: 3.6×10^{3} p/cm^2-sec: E>4 MeV
Maximum Dose Rate: 7×10^{-4} rads(Si)/Sec

Total Trapped Proton plus Trapped Electron
Ionizing Dose: 4.95×10^{3} rads(Si)

NOTES:

(1) The values stated above are based on predicted external radiation conditions during Solar Minimum for the 5-year period 1984 through 1988.

(2) The total ionizing dose stated above is an integrated value for the 5-year (Solar Minimum) period 1984 through 1988. For SIs, ORUs, and GRUs to be flown only through a 5-year Solar Maximum period, e.g., 1990 through 1994, the total ionizing dose for 5 years may be considered as 57 percent of the value stated above. For exposure periods which do not coincide with either a 5-year Solar Minimum or a 5-year Solar Maximum, the total dose may be determined, by prorating the 5-year dose for each condition and summing the prorated dose values as applicable.

(3) For components to be used over the lifetime of the ST, the total dose will be 2.57 times the 5-year (Solar Minimum) dose stated above.

(4) The maximum dose rates are calculated for traversals through the South Atlantic geomagnetic anomaly.

3.6.6 SSM Pressure Environment and SI Differential Pressure. The operational pressure environment within the SSM varies from 16.0 psia at launch to less than 1×10^{-6} torr in orbit. The pressure within the Aft Shroud will not exceed the profile given in Figure 3.6-6A. The SI maximum differential pressure during ascent and descent is shown in Figure 3.6-7. IRN 91

3.6.7 Humidity. During all ground, transportation, storage, and prelaunch operations the relative humidity is 0 to 50 percent maximum inside the SSM.

During entry, descent, and landing the humidity of the air on entering the SSM is uncontrolled. All SI surfaces which are at temperatures below the dew point of the incoming air are subject to condensation. After touchdown, a post-landing purge maintains the absolute humidity of the cargo bay at less than 34 grains of water vapor per pound of air.

IRN 91

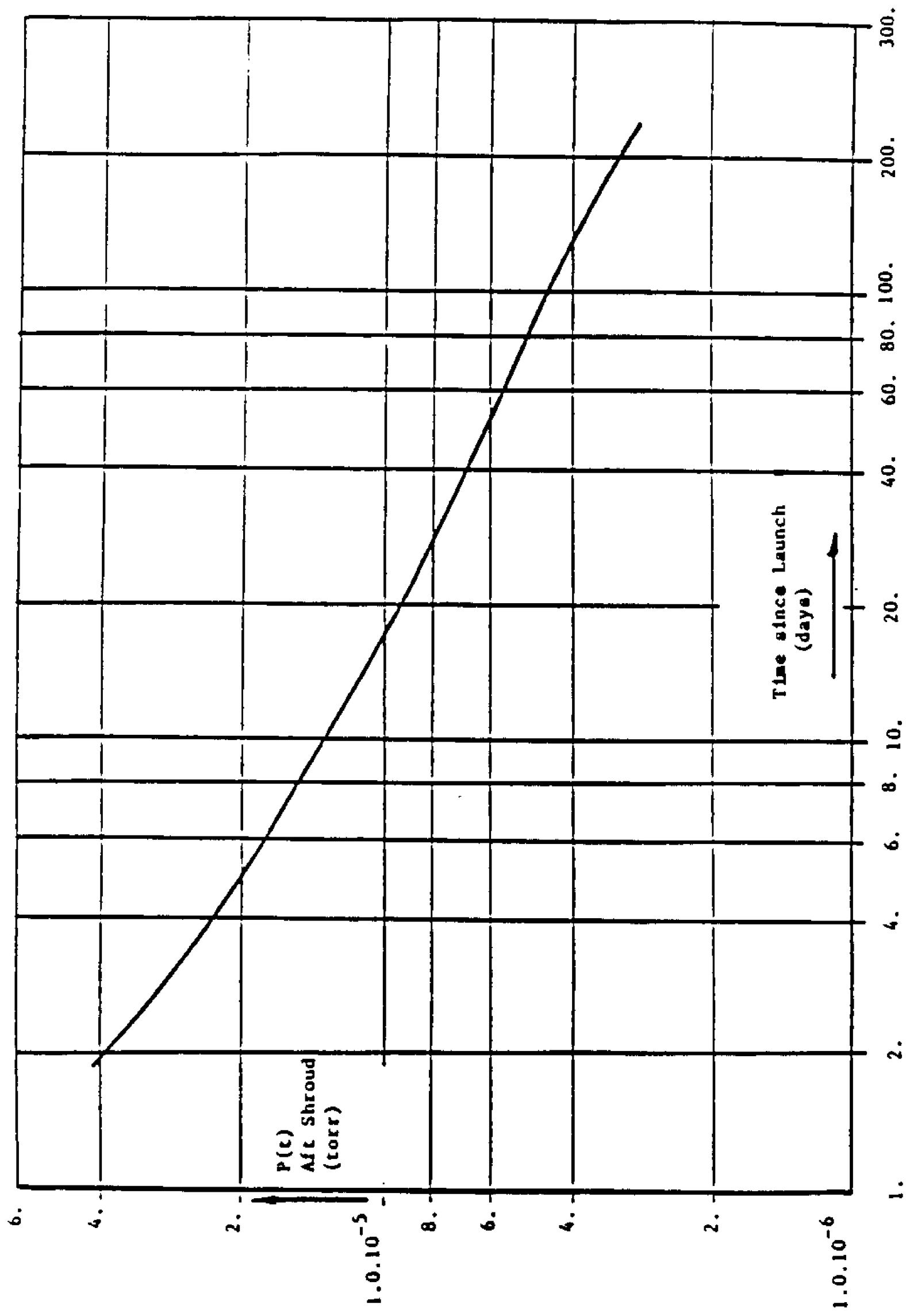

* Based on T/V Test correlated predictions for the following prelaunch timeline:
- Interior at 40% relative humidity for 13 months following thermal vacuum test
- Interior at 15% relative humidity to launch minus 2 days
- Interior at 40% relative humidity for 2 days prior to launch

Figure 3.6-6a Aft Shroud Orbiter Pressure Profile

(New Page created by IRN 91)

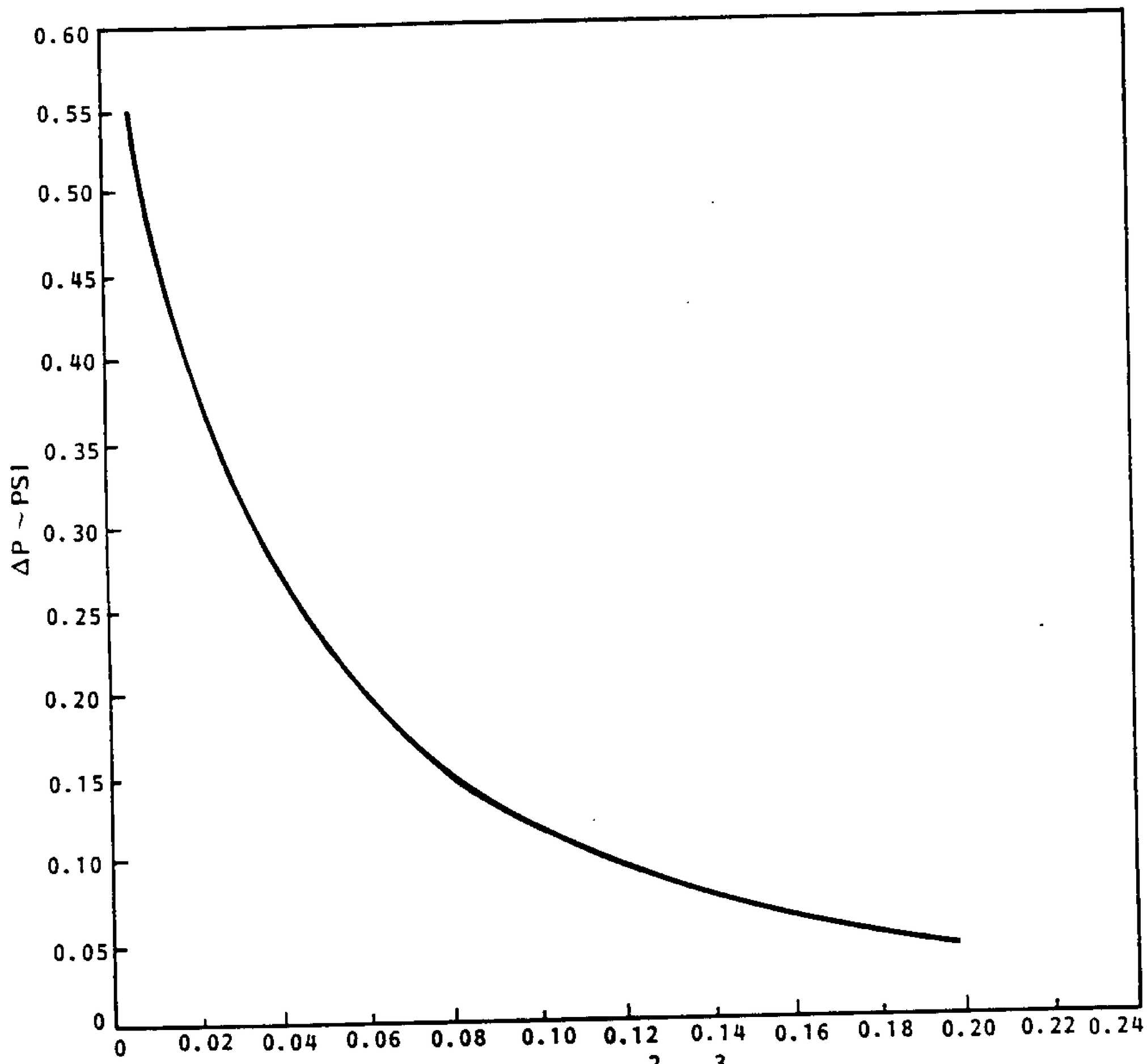

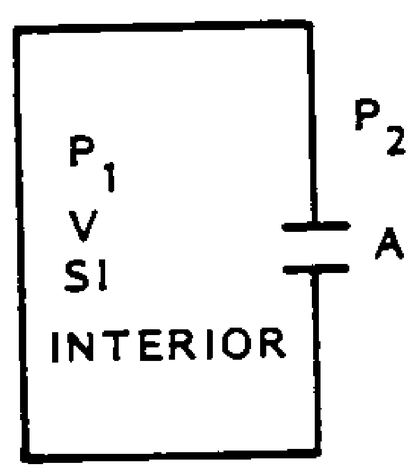

$\Delta P = P_1 - P_2$ ~ PSI

A = SI VENT AREA ~ IN^2 (UNFILTERED)

V = SI COMPARTMENT VOLUME ~ FT^3

NOTE: FOR A FILTERED OPENING, THE VENT AREA (A) IS EQUAL TO THE EFFECTIVE AREA OF THE FILTER

Figure 3.6-7 Maximum SI Wall Differential Pressure Versus a Ratio of Vent Area to Volume

3.7 Electrical Power. The power consumed by each SI, including any peak power excursions, does not exceed 150 watts (averaged over one orbit period). This 150 watt allocation includes any power required by the SI C&DH Remote Module (RM) mounted in each SI. A peak power of 250 watts/SI for 2 minutes per orbit is permitted as long as the thermal constraints of 3.6.1 are maintained.

3.7.1 Power Buses. The SSM supplies each SI two switched power buses for SI operating power and two switched power buses for the RM power as shown in Figure 3.7-1. Each bus conforms to the requirements specified in the following paragraphs. Under normal operating conditions the SSM powers all power buses simultaneously. Each SI ensures that all primary power returns are isolated from structure and returned through the interface connector to the SSM negative return bus.

3.7.2 SI Interchangeability. All SI power interfaces are identical such that any SI can operate from either power bus and from any axial bay in the FPS.

3.7.3 Fusing. Each power bus is fused in the SSM EPS to protect harnessing and other ST equipment from shorts occurring in SI equipment. The SSM fuse size ensures that steady state current, surge current and in-rush currents (of the SI having the highest load) have no deleterious effects on fuse operation. Fuse size and characteristics are as shown in Figure 3.7-1 and Table 3.7-1. The input filter capacitance in the RM is limited to a maximum of 500 microfarads to keep from blowing the three ampere fuse.

3.7.4 Switching. SSM switching devices used for control of the primary and redundant buses are capable, as a minimum, of switching currents up to the fuse rating to ensure "soft shorts" below the fuse rating can be removed from the SSM power buses. Each switch contact is capable of switching the rated currents shown in Table 3.7-1. The internal SI power control is capable of switching in-rush currents and turn on voltage transients.

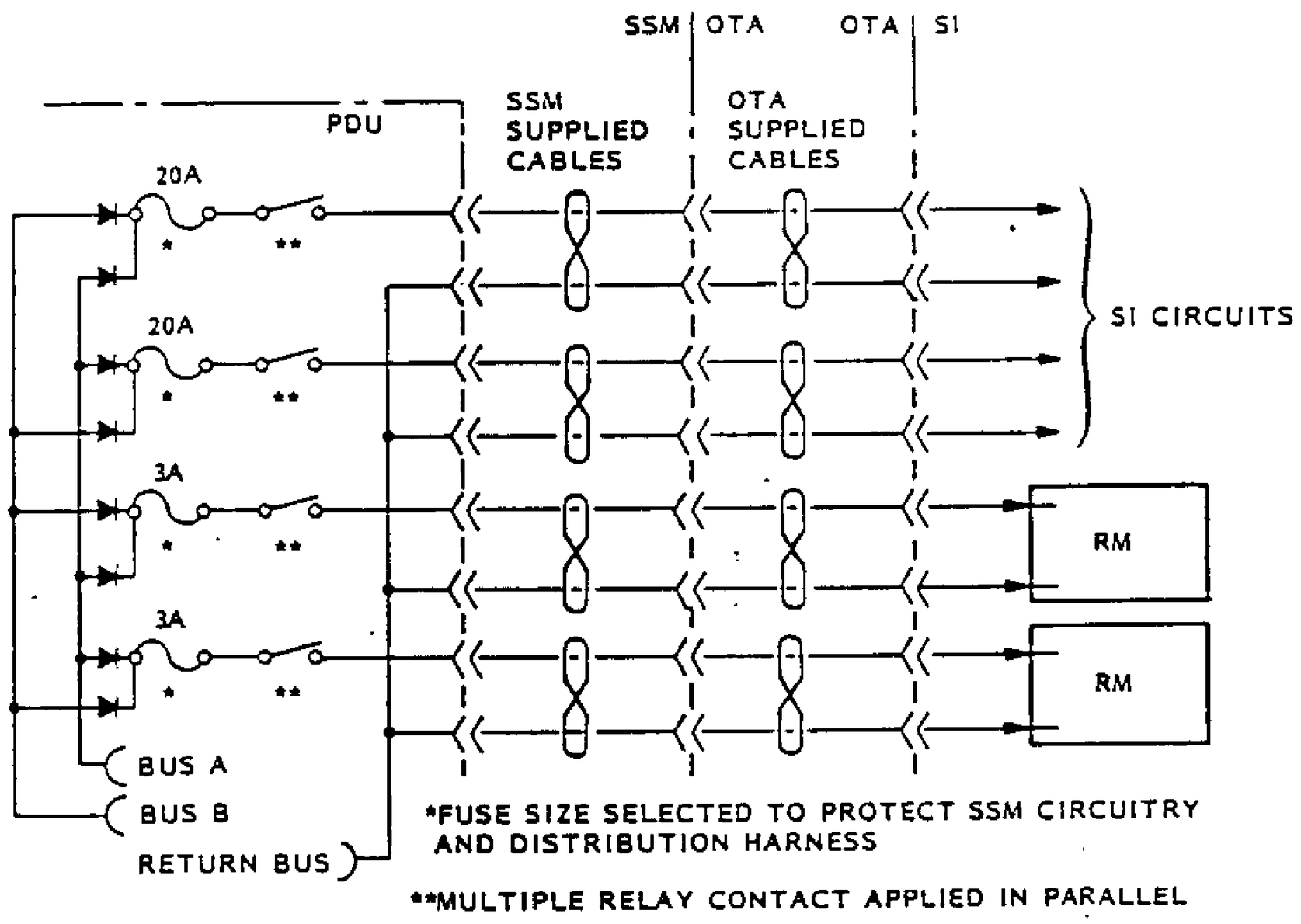

IRN 69

Figure 3.7-1 Typical SSM/OTA/SI Power Interface

(Supersedes pg. 3.7-2 dated 29 June 1984)

TABLE 3.7-1

CIRCUIT PROTECTION

BLOW TIME	RATED FUSE SIZE (AMPS)	BLOW CURRENT (AMPS)
0.1 sec*	3	8.3
0.1 sec*	20	72

*Fuse blow current based on -55°C and a max rating factor of 110%.

3.7.5 Operating Voltage. The SSM supplies to each SI power interface connector a nominal operating voltage of +24 to +32 Vdc under maximum load conditions. Each SI is capable of surviving, but is not required to operate within specification, during application of voltages of +21 to +24 and +32 to +35 Vdc.

3.7.6 Bus Control Circuit. No single point failure within an SI will simultaneously blow both primary and redundant bus fuses.

3.7.7 Section not used.

3.7.8 Grounding of SIs to ST Structure. The SI enclosures are bonded to the ST through short copper bonding straps connected to the SIs. The bonding straps are removable for in-orbit maintenance. The bonding resistance between the bonding strap and each end connection to structure does not exceed 2.5 milliohms. The bond strap dimensions are 22.0 in. max. x 1.62 in. min. x 0.010 in.

The bond strap resistance does not exceed 2.0 milliohms and the inductance does not exceed 0.4 microhenries when determined by analysis in accordance with the following formula:

$$L = .00508\ l\left(2.303 \log \frac{2\ l}{w + t} + 0.5 + .2235 \frac{w + t}{l}\right)$$

Where l = length in inches between attach points
w = width in inches
t = thickness in inches
L = Inductance in microhenries

3.7.8.1 Mount Point Fitting Resistance. Minimum resistance of each mount point fitting is 1K ohm.

3.7.8.2 Multi-Layer Insulation (MLI). For multi-layer insulation forming an exterior surface, all the conductive MLI layers are grounded to each other and the SI structure to prevent static charge buildup. The resistance between the MLI ground connection and the outer conductive MLI layer is 100 K ohms or less. The measurement is from the ground connection to a point 1 inch distant on the MLI. The resistance from the ground connection to the SI structure ground is 1.0 ohm or less.

3.7.9 EMC. The SI is electromagnetically compatible with the SSM as specified in the following paragraphs.

3.7.9.1 Dynamic Impedance. The impedance of the power line (Fig. 3.7-1) as seen by the SI is shown in Figure 3.7-2. These values include the bus impedance and the cable impedance between the SSM Power Distribution Unit and the SI connector.

3.7.9.2 In-Rush Current. With power applied, the SI limits in-rush currents on any single bus during turn-on and during switching events to values within the envelope shown in Figure 3.7-3. Rate of rise does not exceed 6 amps/usec. These values apply at 30 ± .5 Vdc.

3.7.9.3 SI Generated Ripple & Noise. The SI does not generate ripple and noise on any single power bus in excess of the values shown in Figure 3.7-4. These values apply at 30 ± .5 Vdc.

IRN 89 (See appendix 10.5)

(Supersedes pg. 3.7-4 dated 13 January 1986)

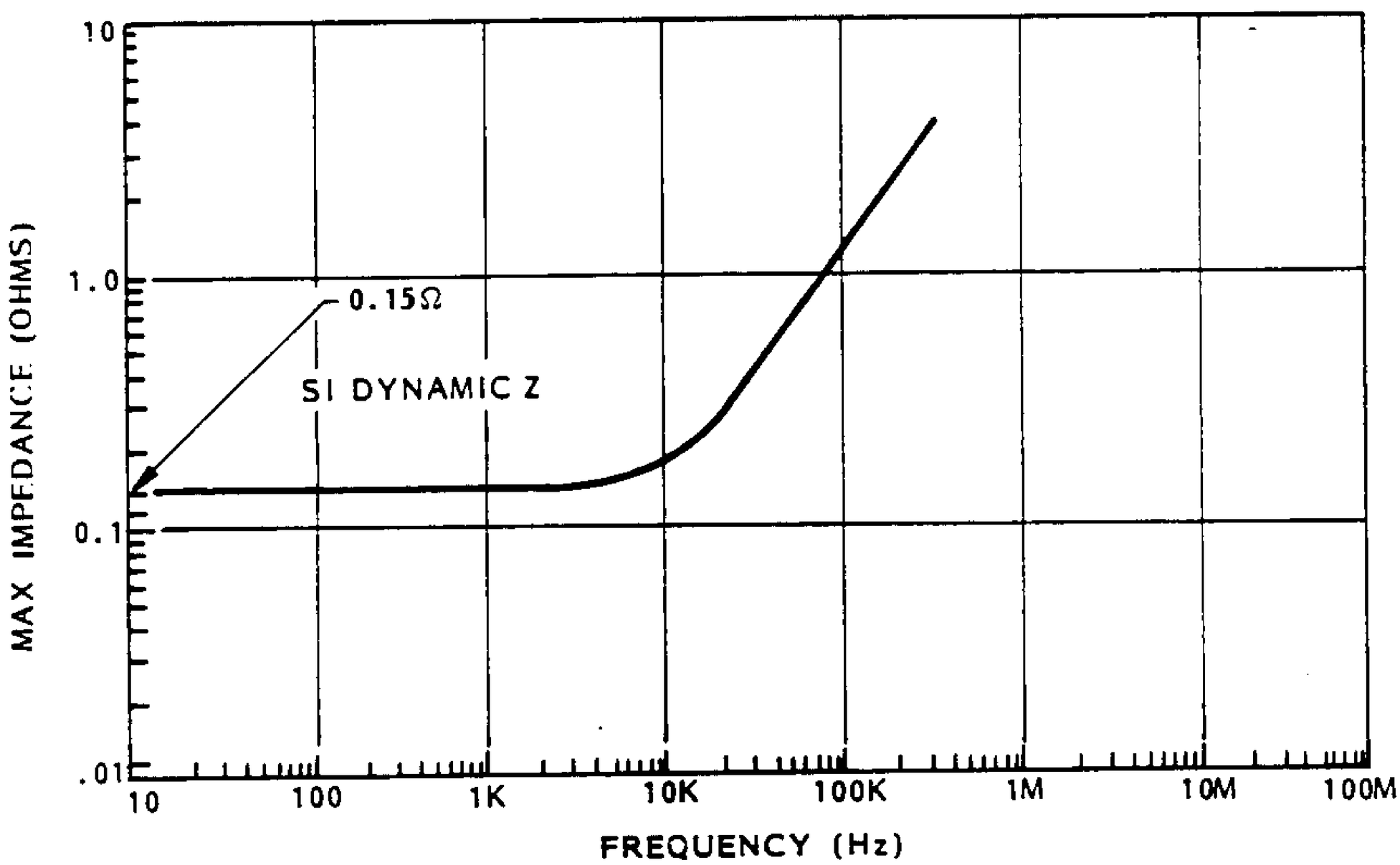

Figure 3.7-2 ST Power Dynamic Impedance at SI Connector

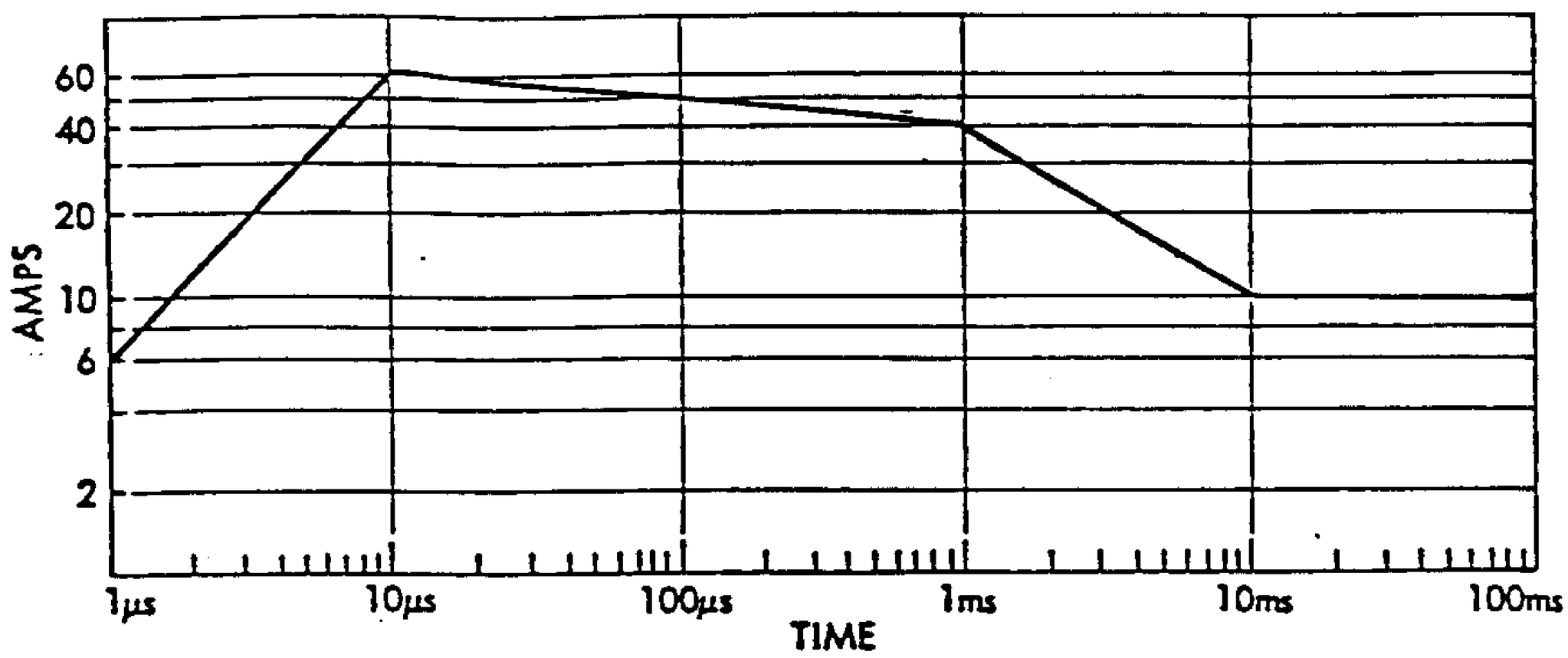

Figure 3.7-3 In-Rush Time Current Profile

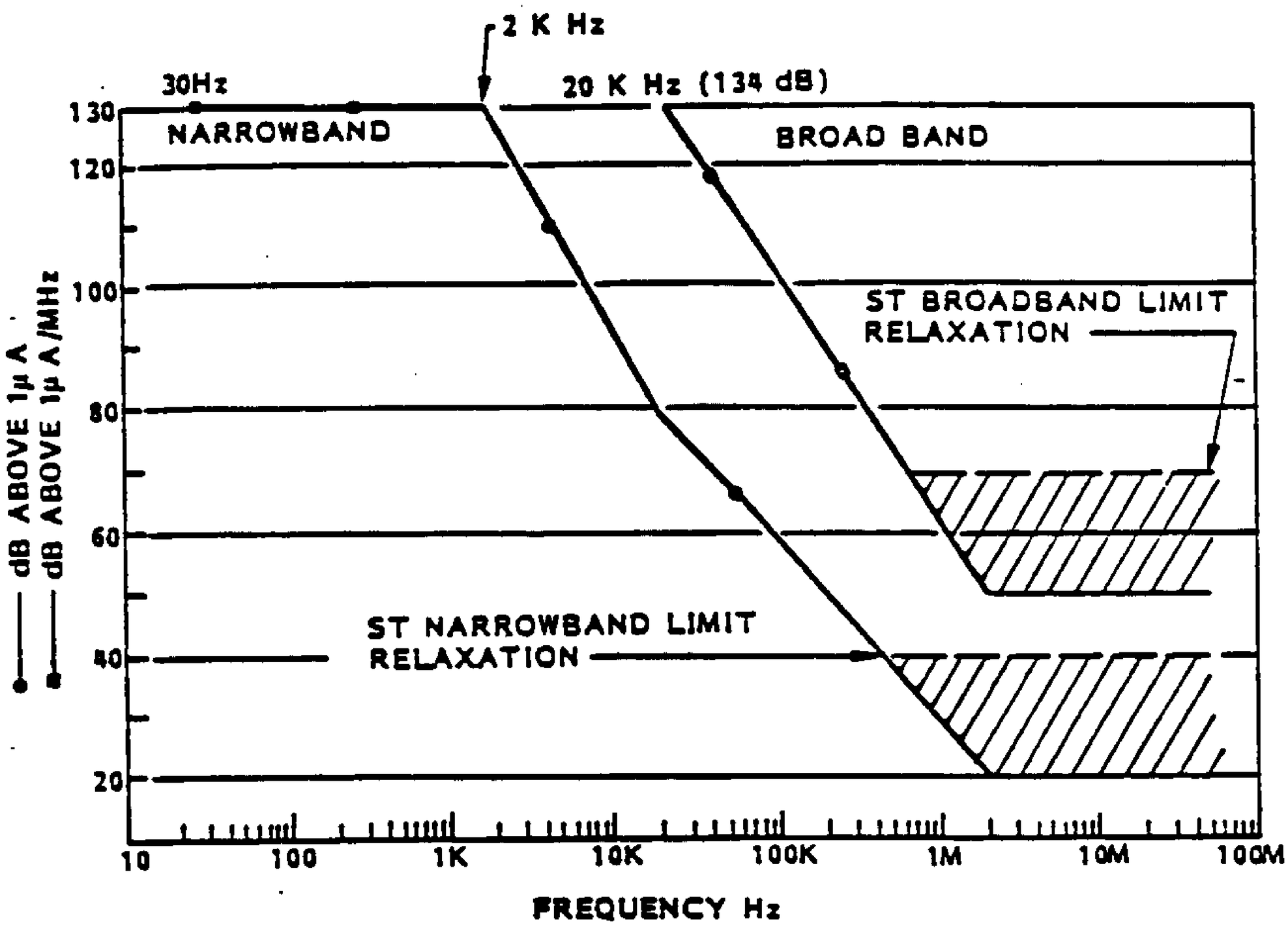

Figure 3.7-4 SI Generated Ripple and Noise Limits

IRN 78 (See appendix 10.2)

(Supersedes pg. 3.7-7 dated 29 June 1984)

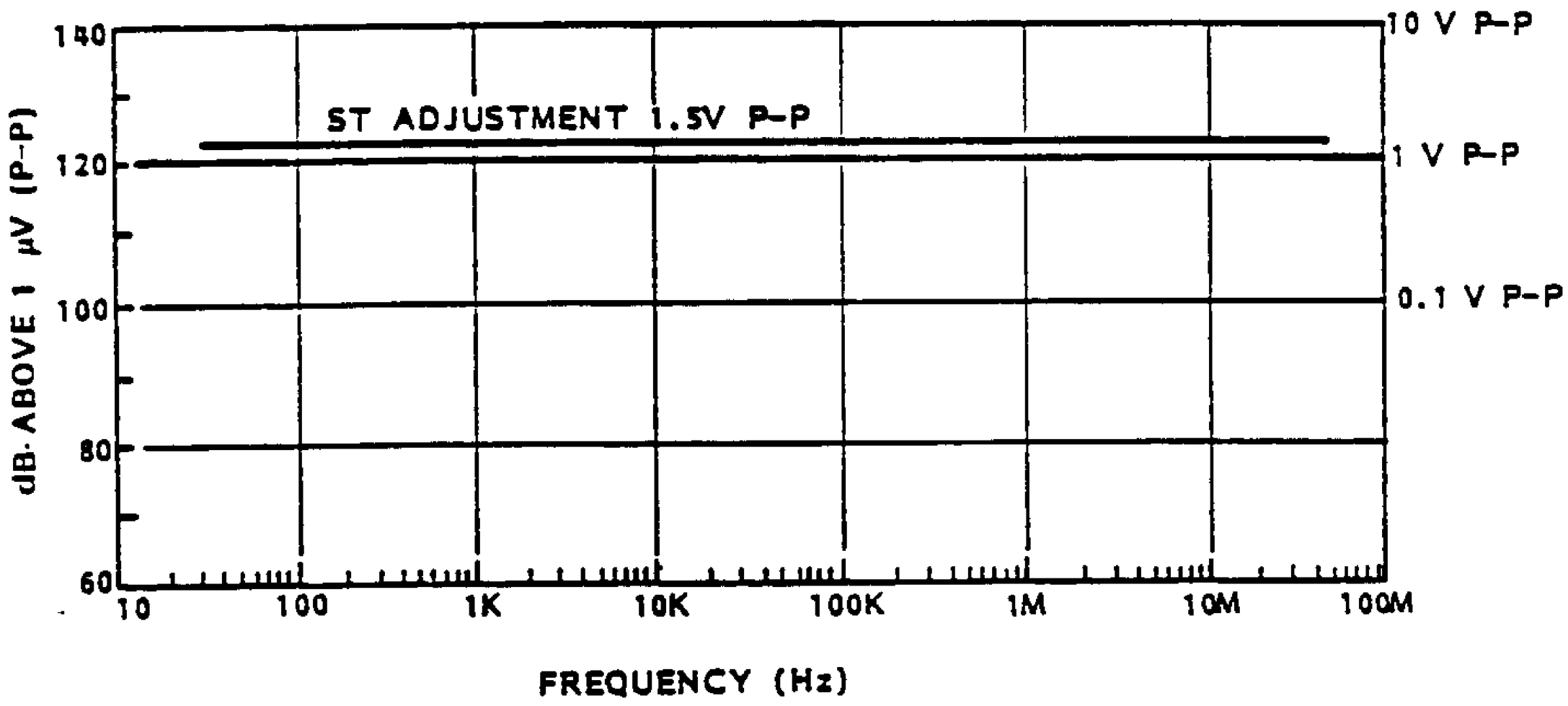

Figure 3.7-5 SI Equipment Ripple and Noise Susceptibility

PLUS TO RETURN:

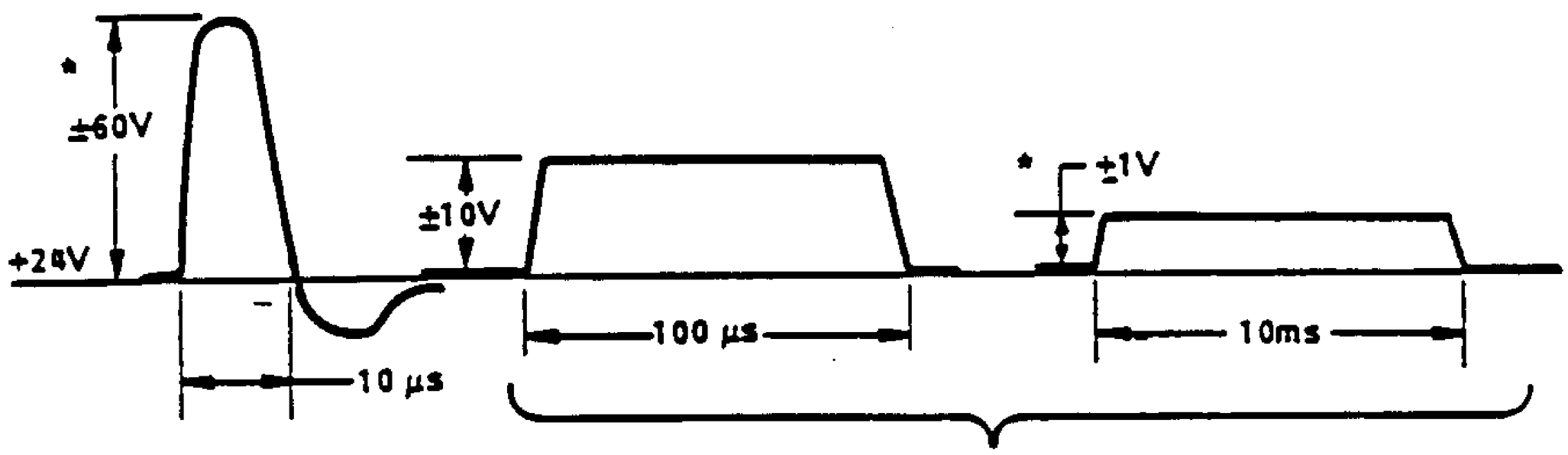

TRAPEZOIDAL - RISE AND FALL TIMES 20% OF TOTAL DURATION

RETURN TO STRUCTURE:

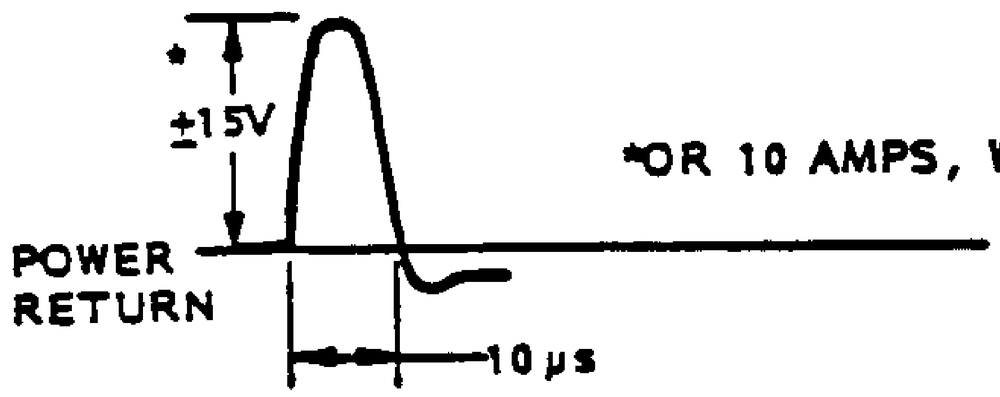

*OR 10 AMPS, WHICHEVER OCCURS FIRST

NOTE: PULSE REPETITION RATES: 2 TO 6 PULSES/SEC

Figure 3.7-6 Transient Susceptibility Test Waveforms

3.7.9.4 Ripple and Noise Susceptibility. The SI is not susceptible to ripple and noise on the power lines. Susceptibility limits are shown in Figure 3.7-5. These values apply at 24.0 ± .1 Vdc. IRN 87 (See appendix 10.2)

3.7.9.5 Transient Susceptibility. The SI is not susceptible to transients that may appear on the power lines, and between power line return and structure. Figure 3.7-6 defines the transient waveforms. These values apply at 24.0 ± .1 Vdc.

3.7.9.6 Survival. The SIs must survive power interruptions up to 500 milliseconds duration, assuming diode isolation between power source and SI.

3.7.9.7 Radiated Susceptibility (E-Field). (Peak Field Strengths). The SI is not degraded in performance when subjected to the following radiated fields:

14 KHz to 35 MHz:	1 volt/meter CW (continuous wave)
35 MHz to 1 GHz:	1 volt/meter AM (modulation peak amplitude)
1 GHz to 3 GHz:	5 volts/meter AM (modulation peak amplitude)

Modulation 30 to 100 percent at 1.0 Khz (square wave) IRN 76 (See appendi 10.4)

3.7.9.8 Radiated Electric Field Emissions. The SI shall not produce radiated electric field emissions, both narrowband and broadband, in excess of the limits shown in Figures 3.7-7 and 3.7-8. Test method will be in accordance with MIL-STD-462, Method RE02. IRN 82 (See appendix 10.5)

(Supersedes pg. 3.7-10 dated 13 January 1986)

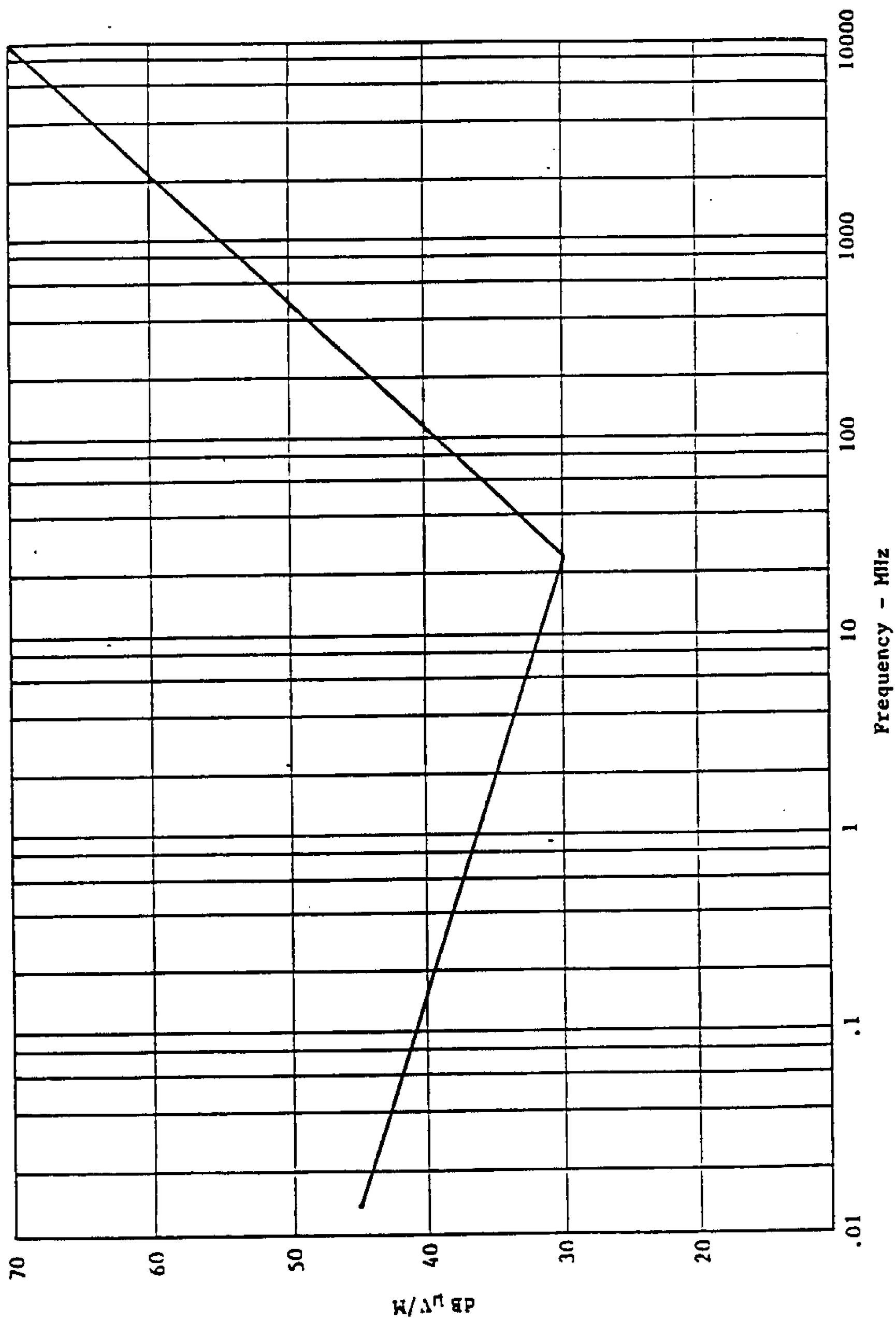

Figure 3.7-7 - Limit for RE02 Narrow Band Radiated Emission

IRN 70

IRN 80 (See appendi 10.1)

(Supersedes pg. 3.7-11 dated 20 November 1984)

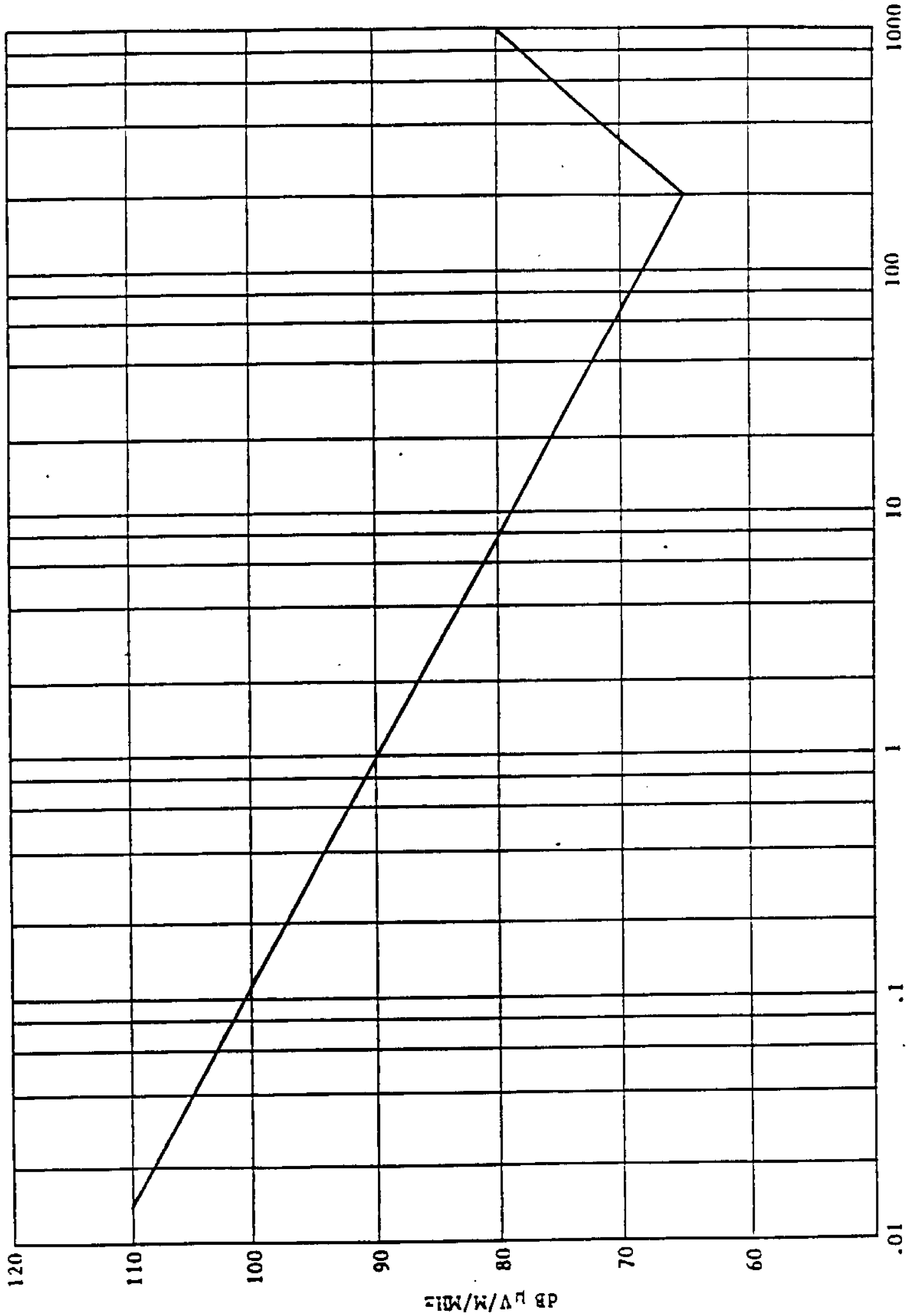

Figure 3.7-8 - Limit for RE02 Broad Band Radiated Emission

IRN 70

IRN 80 (See appendix 10.1)

(Supersedes pg. 3.7-12 dated 20 November 1984)

3.8 Pointing Control. The ST Pointing Control System (PCS) has a functional interface with the SIs via the SI C&DH. This interface includes the peak-up mode, Mode II target acquisition and verification, and the scan request flag in the Processor Interface Table (PIT).

The ST PCS has a functional interface with the SI via the Space Telescope Operations Control Center (STOCC). This interface includes fine pointing, Modes I and III target acquisition and verification, scans, maneuvers, and solar system object tracking.

3.8.1 Fine Pointing. Ref. IRD STR-02.

3.8.2 Modes I, II and III Target Acquisition and Verification. Ref. IRD STR-02. Target acquisition and verification is performed using a peak-up scan described below or by use of a scan followed by an offset maneuver.

3.8.3 Scans. The SSM PCS has capability for performing three scan modes: linear scan, continuous scan, and dwell scan. These modes are used for target acquisition and verification and for science observations.

3.8.3.1 Linear Scan. A linear scan is a slew of the ST optical axis from point A to point B on the celestial sphere at a constant commanded rate. The ST scan begins before point A and continues after point B to attain and maintain a constant rate between A and B. Pointing accuracy during linear scans is given in Fig. 3.8-1.

3.8.3.2 Continuous Scan. A continuous scan (same as serpentine or raster scan) consists of a series of linear scans alternating in direction and offset from one another by a commanded small-angle separation (see Figure 3.8-2). The principal scan direction is arbitrary with respect to the ST axes. There is a "dead-time" at the end of each linear scan line during the turn around (decelerate, small angle maneuver, accelerate). Turn around times are given in Fig. 3.8-1.

Scan Rate (arc sec/sec)	+ ST Single Axis Pointing Accuracy (arc sec rms)	Turn-around Time (sec)
0.0 - 0.02	0.020	20
0.02 - 0.21	0.030	20
0.21 - 20	* 0.2	20
20 - 40	* 1.0	60

\+ Pointing Accuracy is defined relative to the commanded ST orientation. All values do not include effects of orbit ephemeris error contributions or parallax.

* Includes attitude reference drifts for scan durations of 60 sec

Control Device	Dwell Scan
FGS	0.007 sec stability (24 hours) rms
RGA	0.030 sec/sec drift rate rms

Figure 3.8-1 Pointing Accuracy and Stability During Scans

3.8.3.3 Dwell Scan. The dwell scan pattern is shown on Fig. 3.8-2. The basic unit of a dwell scan is a commanded incremental maneuver and a commanded dwell (integration) time. This basic unit is repeated until the number of increments is completed. A small-angle maneuver is then commanded to offset the ST optical axis to the next line where a series of basic units is repeated in the opposite direction. A dwell scan of one line only is also permitted. The science observation occurs at the dwell points.

The time required to move between dwell points as a function of angle between dwell points is given in Fig. 3.8-3.

3.8.3.4 Scan Control Parameters. The following typical parameters are provided to the SI in the downlink data:

For a linear scan, start and stop time of data collection region of each line.

For a dwell scan, arrival and departure time for each dwell point for data integration purposes.

Scans are commanded from the STOCC and executed by the SSM computer.

3.8.3.5 Scan Times. Total scan time is composed of two parts: time spent within the scan field and turn-around time. Time within the field is determined by the scan rate for continuous scans. For dwell scans, time is determined by the integration time at each dwell point, the number of dwell points, and the distance and rate between dwell points as given in Figs. 3.8-3 and 3.8-4. The line change in a dwell scan is done by a small-angle maneuver with times given in Figs. 3.8-3 and 3.8-4.

Turn-around times are given in Fig. 3.8-1, for continuous scans.

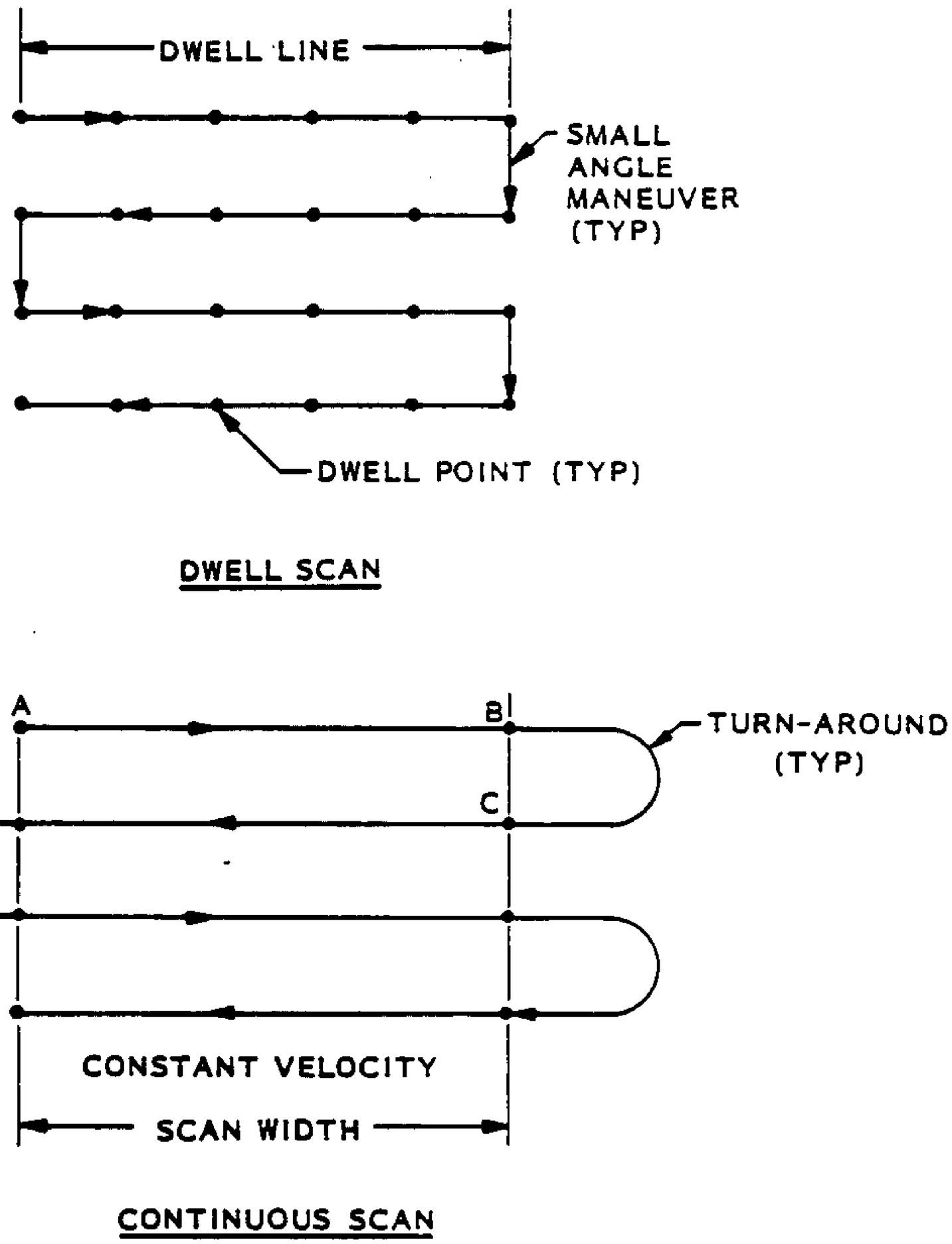

Figure 3.8-2 Scan Patterns

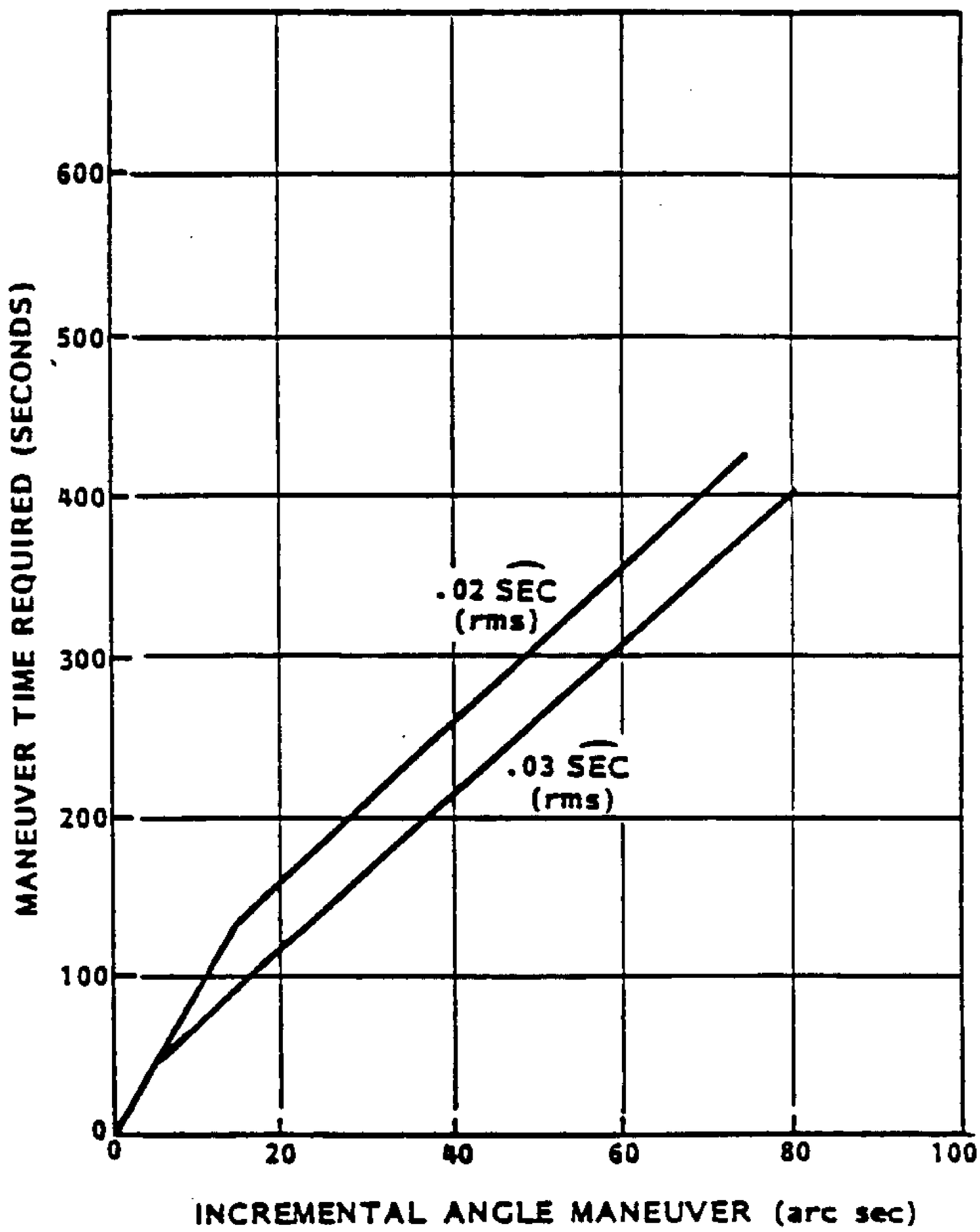

Figure 3.8-3 Maneuver Time Required To Limit Rate To 0.21 arc sec/sec

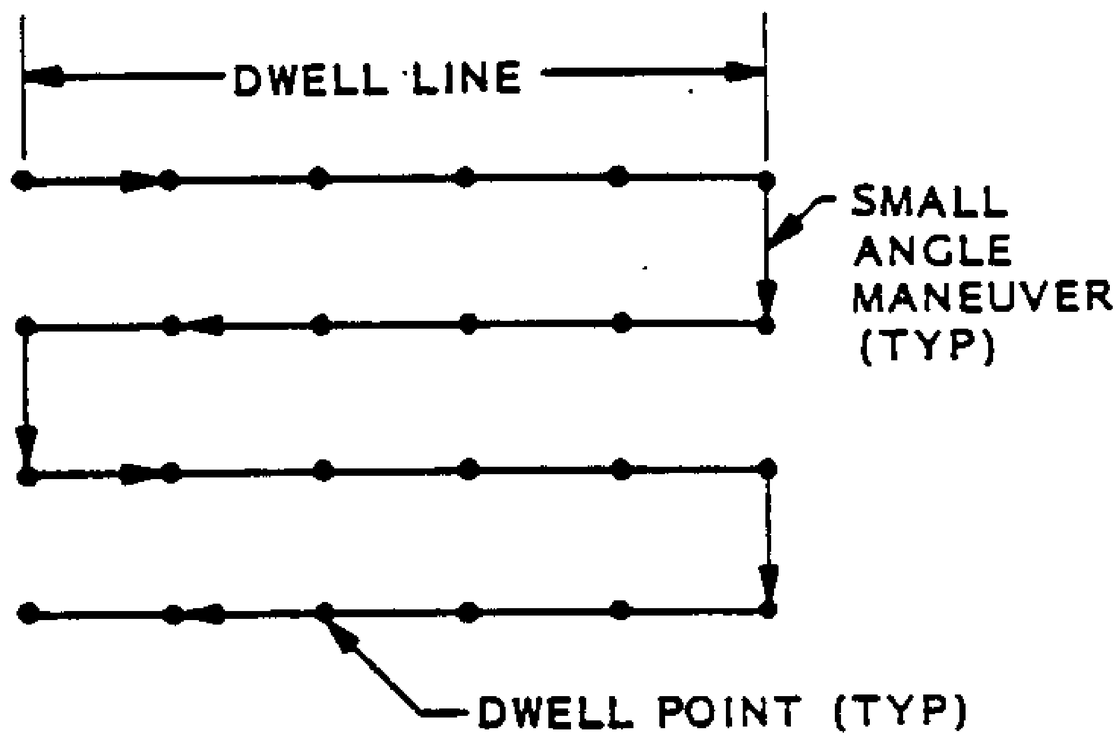

DWELL SCAN

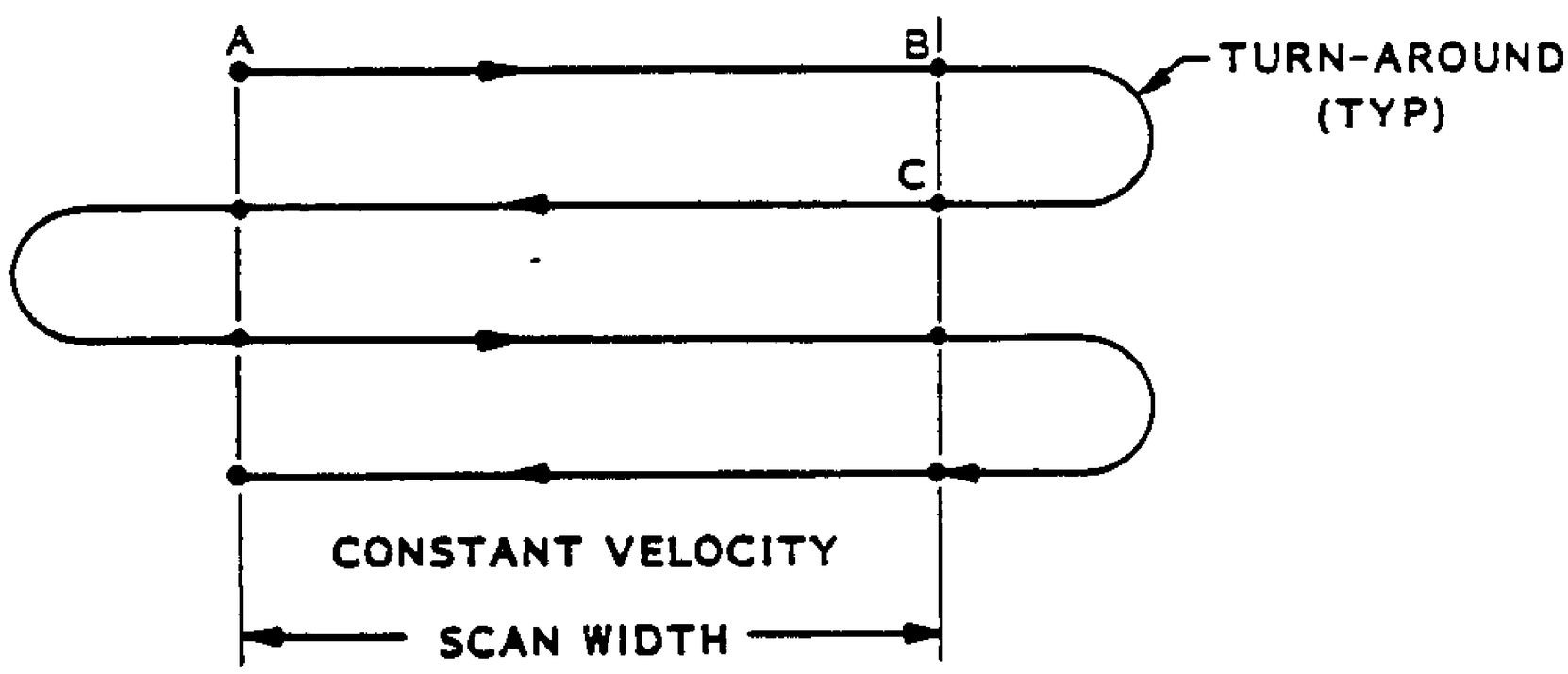

CONTINUOUS SCAN

Figure 3.8-2 Scan Patterns

Small-Angle Maneuver (Arcsec)	Maneuver Time (Sec)
0 - 1	7
1 - 60	20
60 - 90	60

Figure 3.8-4 Preliminary Small-Angle Maneuver Criteria

3.8.3.6 Peak-up Mode. A peak-up scan consists of any scan followed by a peak-up slew. The peak-up slew is commanded by passing a time word from the SI (SI C&DH) to the SSM to identify the position of peak intensity within the scan as determined by the SI.

The SSM stores or maintains an algorithm by which to locate the equivalent of 400 points uniformly distributed within the scan.

3.8.4 Solar System Object Tracking. Solar system object tracking is the same mode as a linear scan (para. 3.8.3.1).

3.9 Maneuver Characteristics. Small-angle maneuvers are for rotations of 900 arc sec or less. Time for small-angle maneuvers under RGA control are given in Fig. 3.8-4.

Time as a function of angle is given in Fig. 3.9-1 for large-angle maneuvers (greater than 900 secs).

The ST position command word resolution for all maneuvers is less than 0.002 arc sec.

The maneuver curves given apply to any axis, including roll.

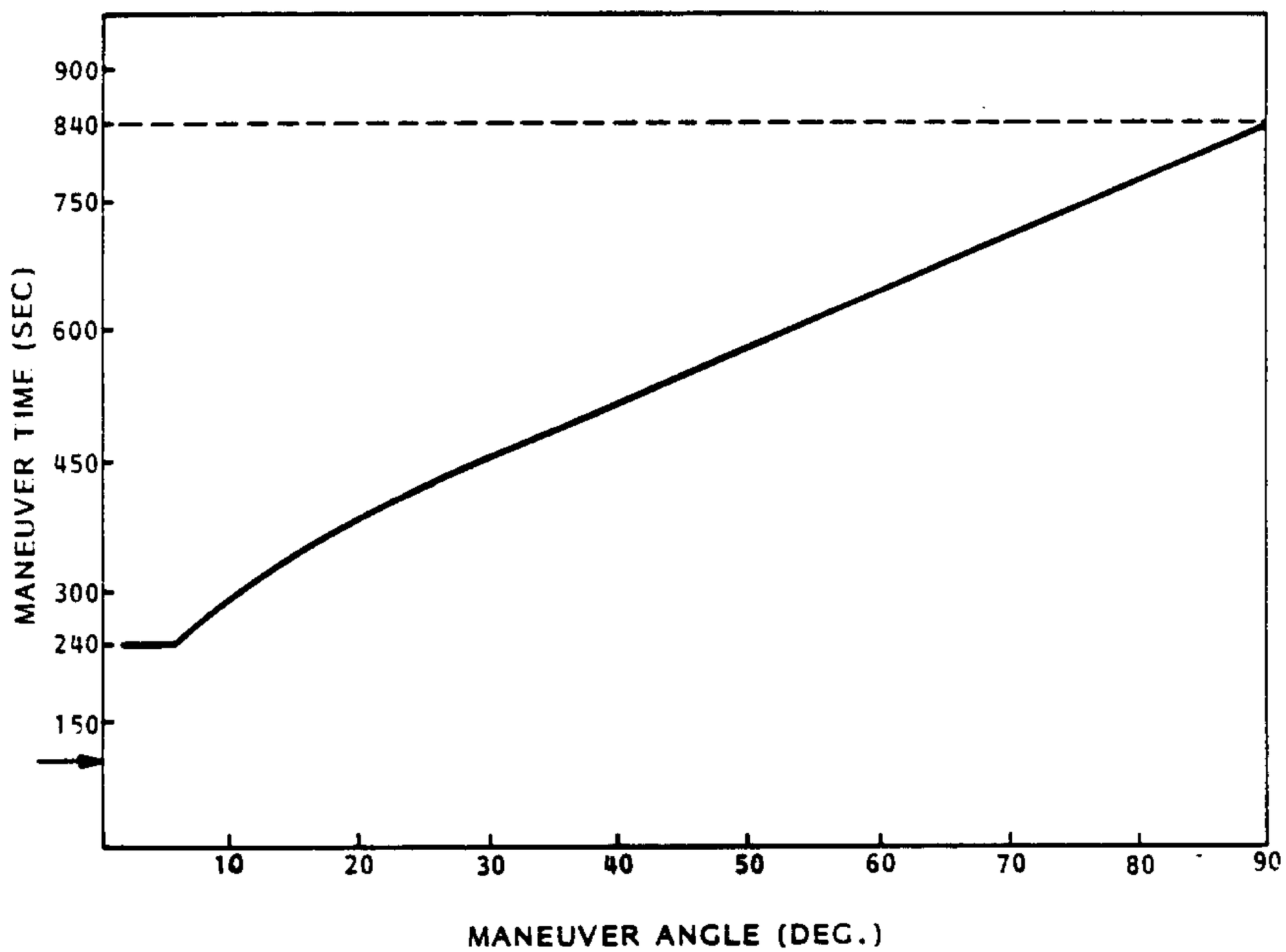

Figure 3.9-1 Maneuver Time Profile

3.10 Uncompensated Momemtum. The science observation may be interrupted for the movement of mechanisms internal to an SI which will induce ST pointing errors greater than 0.0007 arc sec (rms). Non-primary SIs must obtain the approval of the primary SI before performing such mechanism movements. If the ST pointing error produced by the activation of a mechanism is less than .0007 arc sec, no approval is required.

TABLE 3.11-1

POWER CONNECTOR 'A'

FUNCTION	PIN ASSIGNMENT
POWER BUS	X
POWER RETURN	W
POWER BUS	V
POWER RETURN	U
POWER BUS	T
POWER RETURN	S
POWER BUS	R
POWER RETURN	P
REMOTE INTERFACE UNIT POWER BUS	N
REMOTE INTERFACE UNIT RETURN BUS	M
REMOTE INTERFACE UNIT POWER BUS	L
REMOTE INTERFACE UNIT RETURN BUS	K
SPARE	J
SPARE	H
SPARE	G
SPARE	F
SPARE	E
SPARE	D
SPARE	C
SPARE	B
SPARE	A

TABLE 3.11-2

POWER CONNECTOR 'B'

FUNCTION	PIN ASSIGNMENT
POWER BUS	X
POWER RETURN	W
POWER BUS	V
POWER RETURN	U
POWER BUS	T
POWER RETURN	S
POWER BUS	R
POWER RETURN	P
REMOTE INTERFACE UNIT POWER BUS	N
REMOTE INTERFACE UNIT RETURN BUS	M
REMOTE INTERFACE UNIT POWER BUS	L
REMOTE INTERFACE UNIT RETURN BUS	K
SPARE	J
SPARE	H
SPARE	G
SPARE	F
SPARE	E
SPARE	D
SPARE	C
SPARE	B
SPARE	A

TABLE 3.11-3

SIGNAL/COMMAND "A" CONNECTOR

Function	Pin Assignment
Spare	Z
Science Data Ready True	Y
Science Data Ready Complement	X
Spare	W
Science Data Gate True	V
Science Data Gate Complement	U
Science Data Clock True	T
Science Data Clock Complement	S
Science Data True	R
Science Data Complement	P
Line Start True	N
Line Start Complement	M
Frame Start True	L
Frame Start Complement	K
Common Shield for SI Data Lines	J
Signal Ground	H
Supervisory Bus "A" True	G
Supervisory Bus "A" Complement	F
Supervisory Bus "A" Shield	E
Reply Bus "A" True	D
Reply Bus "A" Complement	C
Reply Bus "A" Shield	B
Spare	A

TABLE 3.11-4

SIGNAL/COMMAND "B" CONNECTOR

Function	Pin Assignment
Spare	Z
Science Data Ready True	Y
Science Data Ready Complement	X
Spare	W
Science Data Gate True	V
Science Data Gate Complement	U
Science Data Clock True	T
Science Data Clock Complement	S
Science Data True	R
Science Data Complement	P
Line Start True	N
Line Start Complement	M
Frame Start True	L
Frame Start Complement	K
Common Shield for SI Data Lines	J
Signal Ground	H
Supervisory Bus "B" True	G
Supervisory Bus "B" Complement	F
Supervisory Bus "B" Shield	E
Reply Bus "B" True	D
Reply Bus "B" Complement	C
Reply Bus "B" Shield	B
Spare	A

3.11 Interface Connectors and Pin Assignments.

3.11.1 Connectors. Type LJT (per OTA SCD No 679-6004) for SIs are provided by the OTA contractor and are supplied with loose contacts (10% overage) and insertion tools.

2 power receptacles, each containing 21, 16g contacts:

LJTPQ00RT23-21P/453(-101) (Power Connection A)

LJTPQ00RT23-21PA/453(-102) (Power Connection B)

2 signal receptacles, each containing 21, 20g contacts and 2, 16g contacts:

LJTPQ00RT17-99P/453(-106) (Signal Connector A)

LJTPQ00RT17-99PA/453(107) (Signal Connector B)

1 RG 316 U Coax Pin contact:

21-33122-563

1 test receptacle containing 55, 22g contacts:

LJTPQ00RT17-35P/453(-105)

3.11.2 Pin Assignments. Each redundant power connector contains the connections as indicated in Table 3.11-1 and -2.

Each redundant signal/command connector contains the connections as indicated in Table 3.11-3 and -4.

3.12 SI Math Models.

3.12.1 Structural Math Models. The SI structural models provided by SI Contractors to both the OTA and SSM Contractors are simplified representations of the detailed models used by SI Contractors in the design, development and performance analysis of the instruments.

The first lateral and torsion modes determined from these simplified models agree within ± 10%, with those predicted by the more detailed models.

The simplified models are a reduced NASTRAN model using ASET reduction technique. The simplified model consists of up to 150 degrees of freedom representing translation only (essentially equivalent to 50 grid points). Data is transmitted by either card deck or mag tape (9-track, 1600 BPI, fixed record format, logical record length = 80, blocksize = 800).

In addition, the output data from the more detailed model is supplied for comparison to the simplified model data.

3.12.2 Thermal Math Models. The SI thermal models provided by SI Contractors to both the OTA and SSM Contractors are simplified representations of the detailed models used by SI Contractors in the design, development and performance analysis of the instruments.

The simplified thermal models are in SINDA or HEAT format and consist of a maximum of 55 nodes including no more than 40 surface nodes plus one node for each of the 3 FPS attachment point interfaces. The models are transmitted in the form of a card deck with a listing of the bulk data, a nodal schematic and a sample analysis output. Temperature dependent functions such as heaters, louvers, etc., are clearly indicated. The model represents all the power modes of Section 3.6.1.1.4: Operational, and hold as a minimum.

In addition, the output data from the more detailed model is supplied for comparison to the simplified model data.

4.0 ORI REQUIREMENTS

4.1 Axial Orbital Replacement Instruments. The purpose of Section 4.0 of this ICD is to define the interface requirements for the Axial Orbital Replacement Instruments (Axial ORIs), being developed for installation in the HST on-orbit. This is required to describe the actual HST optical characteristics and because a number of other interfaces have changed significantly since the original HST launch. IRN 106 IRN 100

(Supersedes Page 4.1-1 dated 24 March 1995)

4.2 General Interface Characteristics.

4.2.1 Interfaces. The interfaces with the SIs consist of mechanical, optical, structural, and electrical, with the OTA; environmental (thermal, pressure, loads, contamination) with the OTA/SSM in combination, and functional (power, commands, telemetry, data, pointing control, structural, environmental, SSE) interfaces with the SSM. Selected SIs will have additional interfaces with the SSM/OTA via the Aft Shroud Cooling System/NICMOS Cooling System (ASCS/NCS) slated for installation on HST during SM3. The purpose of the ASCS/NCS is to enhance the science capabilities of axial SIs by providing additional cooling directly to the targeted SIs. The interfaces between the ASCS/NCS and the SI/SSM/OTA are defined and controlled by ST-ICD-98, except for mass properties which are identified in Section 4.5.3.1 of ST-ICD-02. IRN 100 IRN 117

4.2.2 Coordinate Systems. The HST and Axial SI coordinate systems shall be as defined in Figure 4.2-1. IRN 106

The SI coordinate systems, required to properly define the SI to the HST coordinate system, are defined in the following paragraphs. Station position values are given in inches unless otherwise noted.

4.2.2.1 Axial SI Coordinate System. An orthogonal coordinate system P1, P2, P3 is defined in Figure 4.2-1 for each of the axial SI positions such that the P1 axis is parallel to the HST V1 axis with the SI installed in the HST. The P2 and P3 axes rotate 90 degrees clockwise into each position, number one to two, two to three, three to four, and four to one. The origin, Point "A", of each SI system is the center of the forward SI to OTA registration fitting (see paragraph 4.3.7.1). Each SI shall be designed to be capable of being mounted in any of the four quadrants as shown in Figure 4.2-1 if possible. However if specific design requirements necessitate a critical feature on one particular side of the SI, such as a thermal radiator with heat pipes, then the SI must be capable of being mounted in either of two quadrants, the odd positions 1 or 3, or the even positions 2 or 4. This requirement does not apply to COSTAR which is being designed specifically for bay 4. Each of the SIs must meet all of the interfaces as defined in this section of the ICD. IRN 100

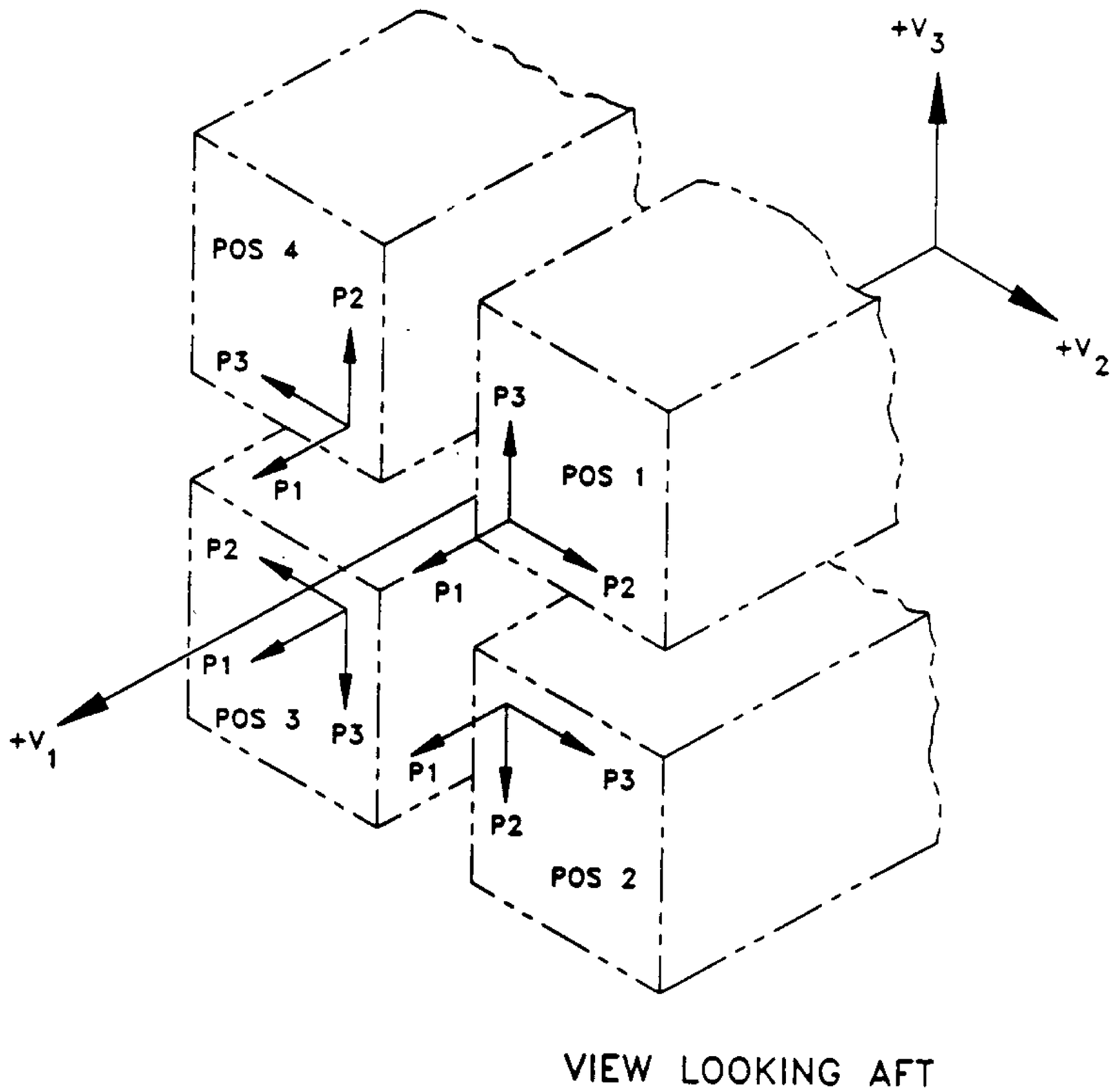

IRN 100

Figure 4.2-1 Axial ORI Coordinate System

(NEW PAGE CREATED BY IRN 100)

4.3 Mechanical Interfaces. The mechanical interfaces described in this section include the SI envelope, SI mounting, guiderail/OTA changeout guides, ground handling, space support equipment, EV crewmember handholds, alignment, in-orbit removal and installation, electrical connector locations, SI accessibility, venting, pressurization, and purge interface definitions. IRN 100

Unless otherwise noted, all dimensions are in inches and tolerances are as follows:

* .XXX = ± 0.005 inches Angles = ± 30 arc. min.
* .XX = ± 0.01 inches
* .x = ± 0.05 inches

All dimensions of the above figures are applied at 21°C.

Unless otherwise noted, all mechanical and structural interface surfaces where intimate contact is made shall be free of paints or similar materials and shall have a surface roughness of no greater than 63 microinches. UNF Helicoils are compatible with UNJF bolts and are acceptable. The threaded length of a UNJF bolt is twice the diameter of the threaded bolt end.

4.3.1 SI Envelope. Each Advanced Axial SI shall fit within the envelope shown in Figure 4.3-1 except for local intrusions and details as specified in Figures 4.3-3, through 4.3-18. The dynamic envelope is shown in Figure 4.3-2.

4.3.2 Mounting Points And Constraints. Each SI is supported and constrained by the OTA at three points (A, B, C) shown in Figure 4.3-1. Constraint directions applicable to each of the three points are as follows:

Point	Direction		
A	± V1	± V2	± V3
B		± V2	± V3
C		± Perpendicular to the Bisector of V2, V3	

(NEW PAGE CREATED BY IRN 100)

IRN 100, 106, 117

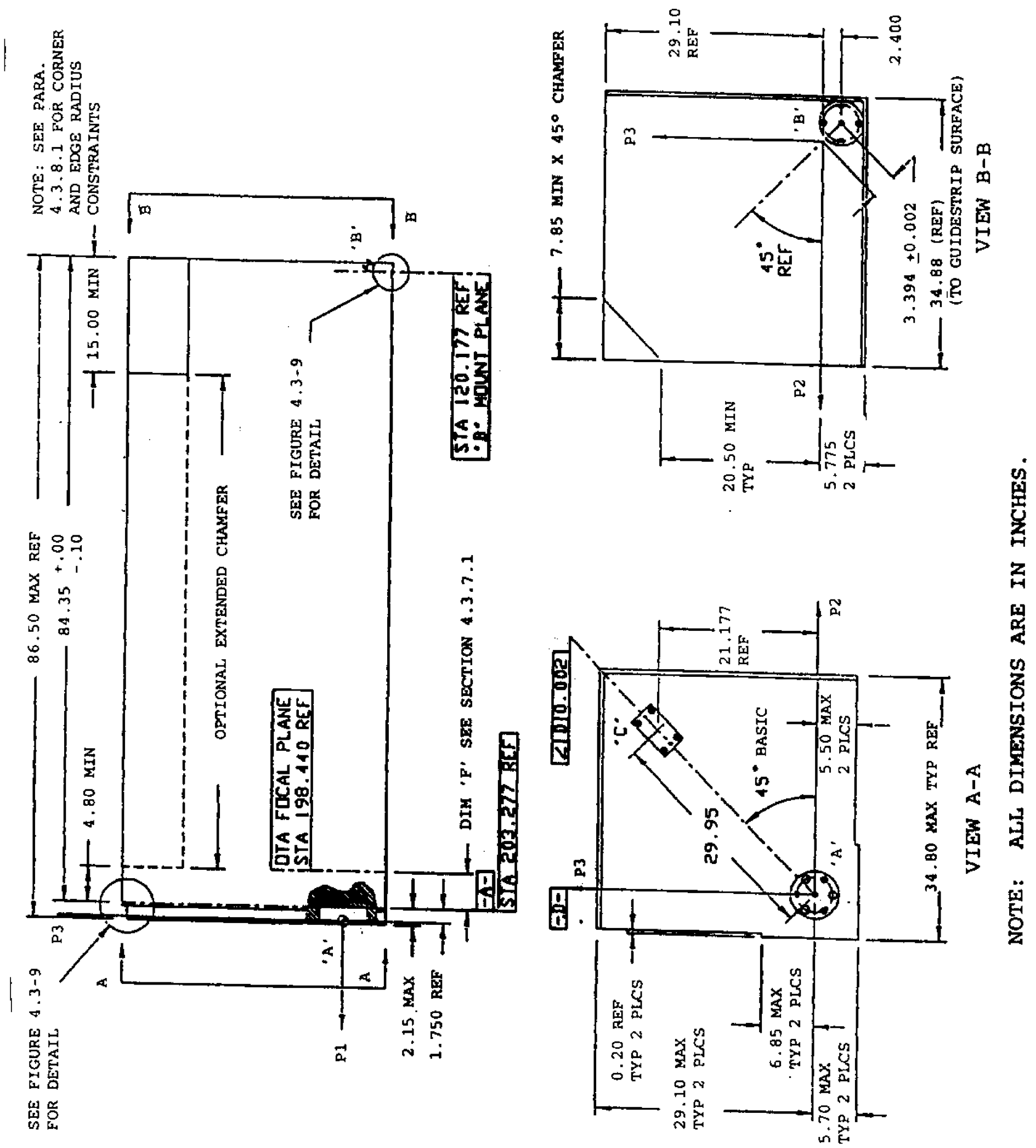

Figure 4.3-1 Axial ORI Static Envelope

(This supersedes page 4.3-2 dated 24 March 1995)

IRN 100

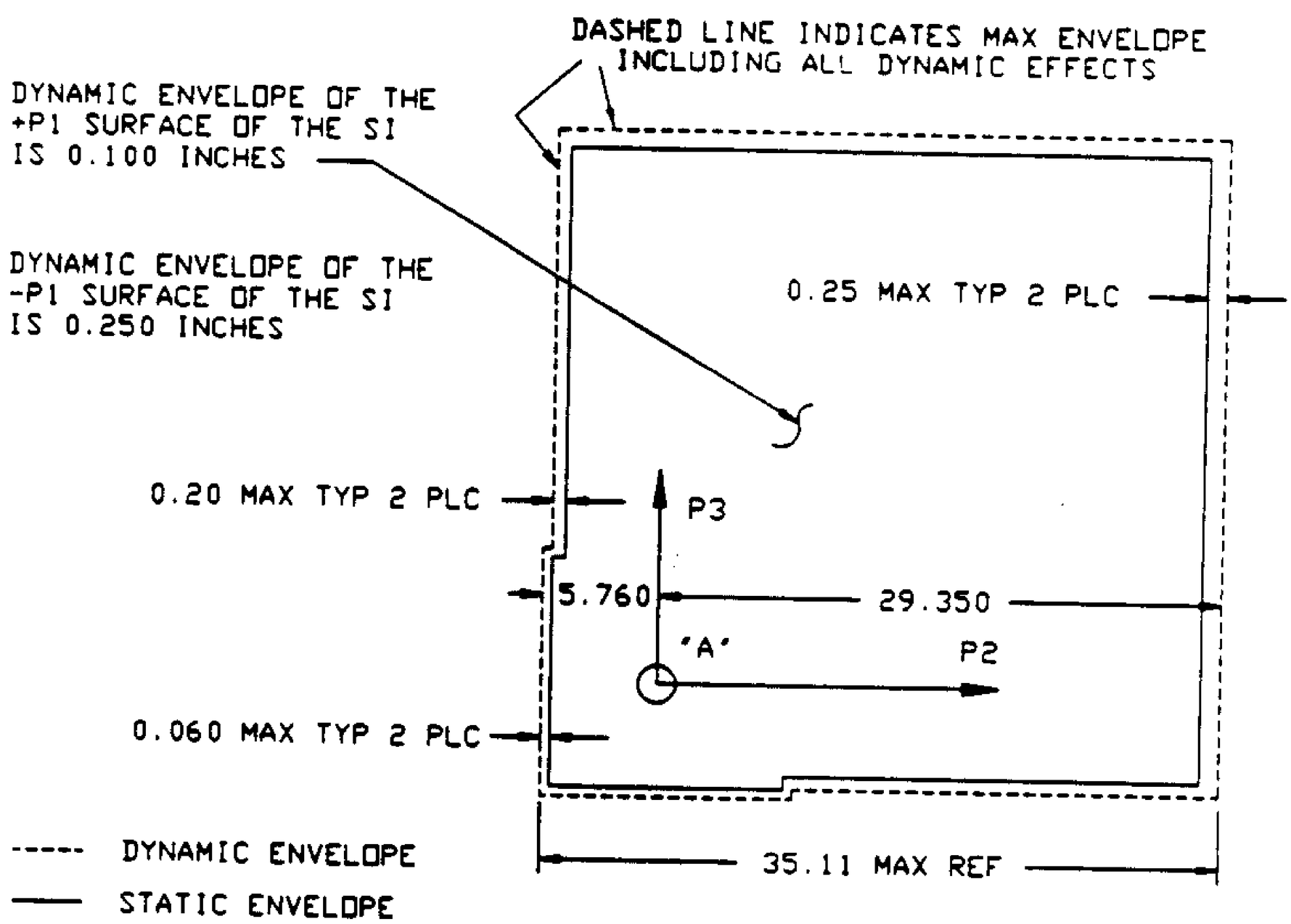

NOTES:
1. GUIDE BLOCK INTERFACE SURFACES NOT SHOWN FOR CLARITY
2. DYNAMIC ENVELOPE LINES ARE EXAGGERATED FOR CLARITY, NOT TO SCALE
3. SI DEFLECTIONS ONLY

Figure 4.3-2 AXIAL ORI Dynamic Envelope

(NEW PAGE CREATED BY IRN 100)

4.3.2.1 Mount Point Fitting Interfaces. The OTA/SI Mount Point Fitting "A" is a ball-in-socket fitting whose interface is shown in Figure 4.3-3. The ball half of the fitting (shown in Figure 4.3-4) is mounted to the SI.

The OTA/SI Mount Point Fitting "B" is a rod-in-spherical bearing fitting whose interface is shown in Figure 4.3-5. The spherical bearing half of the fitting (shown in Figure 4.3-6) is mounted to the SI. IRN 100

The OTA/SI Mount Point Fitting "C" is a ball-in-flexure constraint whose interface is shown in Figure 4.3-7. The flexure half of the fitting shown in Figure 4.3-8) is mounted to the SI.

The SI half of fittings A, B, and C (including bolts) are provided as government furnished equipment (GFE) to the SI Contractor(s) and are installed by the SI Contractor(s). Bolt locking is performed by the SI Contractor using GFE material and procedure.

4.3.3 Guiderail Interface. Guiderails attached to the OTA facilitate in-orbit removal and replacement of SIs. Two guide blocks and one guide strip are attached to each SI as shown in Figures 4.3-9, 4.3-10, 4.3-11, and 4.3-12. The overall SI envelope with the guide blocks and guide strip installed is given in Figure 4.3-13 for bays 1 and 3, and in Figure 4.3-13a for bays 2 and 4. Formerly Perkin-Elmer (PE), drawing numbers for the guide blocks and guide strips are as follows: IRN 117

DRAWING NO.	ITEM
For SIs in Bays 1 and 3:	
679-4800	Guide Block, Left Fwd. (Inboard)
679-4799	Guide Block, Left Rear (Outboard)
679-4802	Guide Strip, Aft Left
For SIs in Bays 2 and 4:	
679-4801	Guide Block, Right Fwd. (Inboard)
679-4798	Guide Block, Right Rear (Outboard)
679-4809	Guide Strip, Aft Right

Mounting details are given on the following formerly PE drawings: IRN 100, 117

DRAWING	TITLE	LOCATION
679-6755	Axial SI Assy.	Bay 1
679-6756	Axial SI Assy.	Bay 2
679-6757	Axial SI Assy.	Bay 3
679-6758	Axial SI Assy.	Bay 4

The two guide blocks, one guide strip and associated attach hardware for each SI are provided as GFE and are installed by the SI Contractor(s). Loads for these guide blocks and guide strips are specified in paragraph 4.5.1.8.2.

NOTES:

1. FLATNESS, PARALLELISM, AND THICKNESS REQUIREMENTS ARE LOCAL AS INDICATED. LOCAL SURFACES ARE COPLANAR WITHIN 0.001 IN.
2. SEE PARA 4.3.7.1 FOR THE V2 AND V3 DIMENSIONS OF EACH BAY
3. LOCAL CONCENTRICITY BETWEEN PT A AND AND THE SHEAR PIN DIAMETER ON THE OTA FITTINGS IS 0.001 IN.

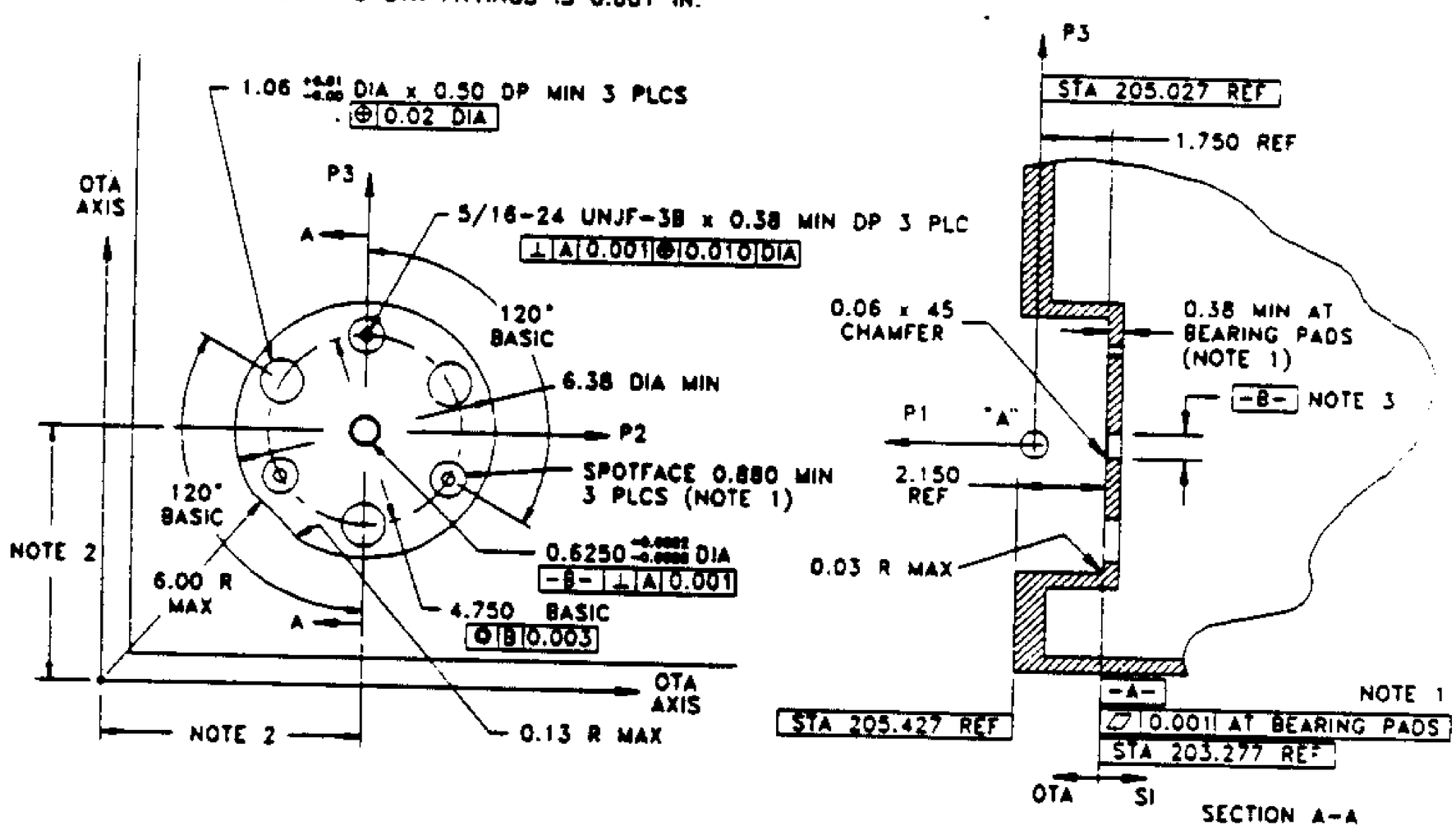

Figure 4.3-3 ORI Mount Point Interface "A"

(NEW PAGE CREATED BY IRN 100)

IRN 100

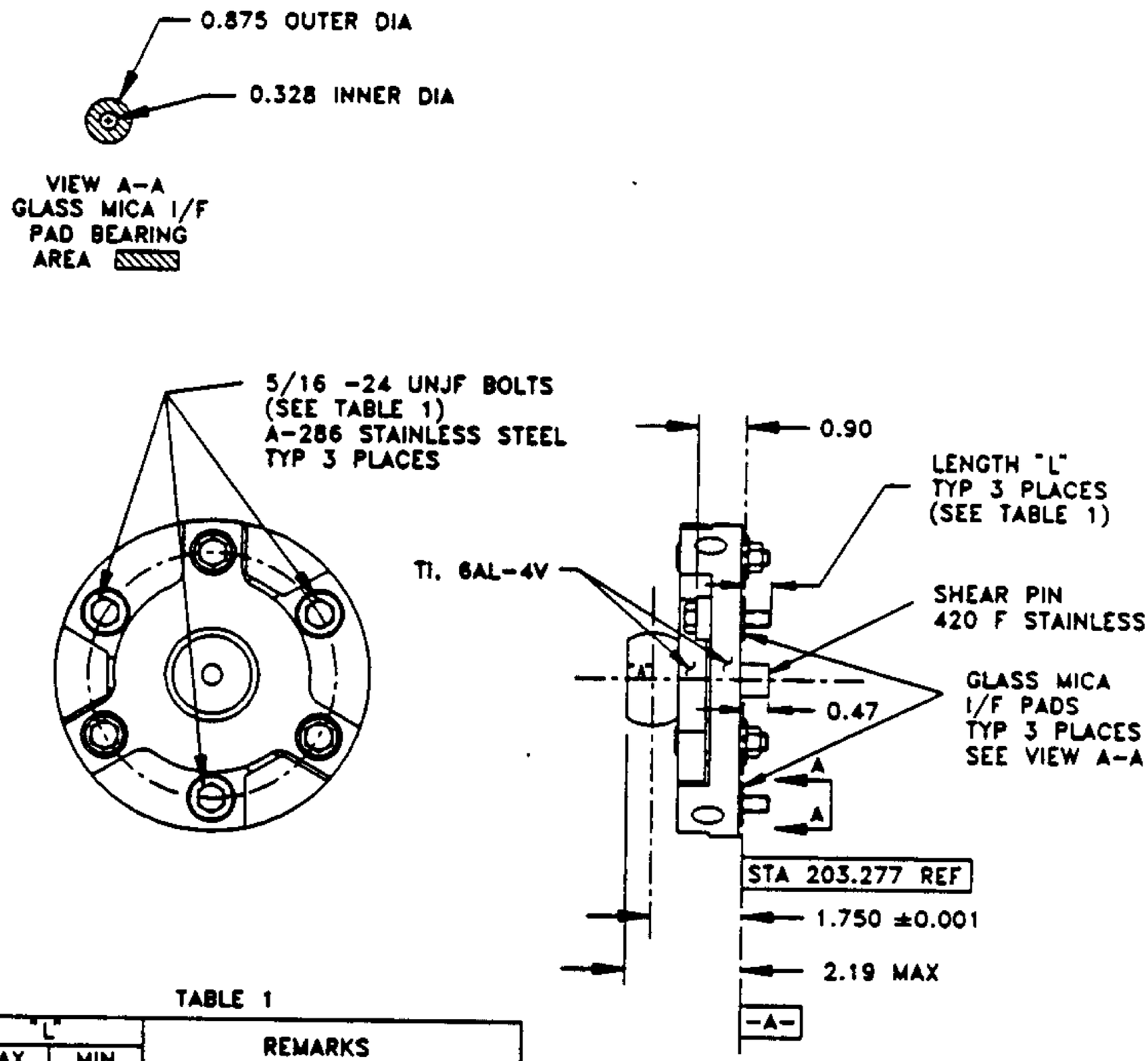

TABLE 1

"L"		REMARKS
MAX	MIN	
0.80	0.50	"L" TO BE SPECIFIED BY SI

Figure 4.3-4 ORI Mount Point Fitting "A" SI Half

(NEW PAGE CREATED BY IRN 100)

NOTES:

1. FLATNESS, PARALLELISM, AND THICKNESS REQUIREMENTS ARE LOCAL AS INDICATED. LOCAL SURFACES ARE COPLANAR WITHIN 0.001 INCH
2. START POSITION OF HOLES OPTIONAL TO SI

IRN 100

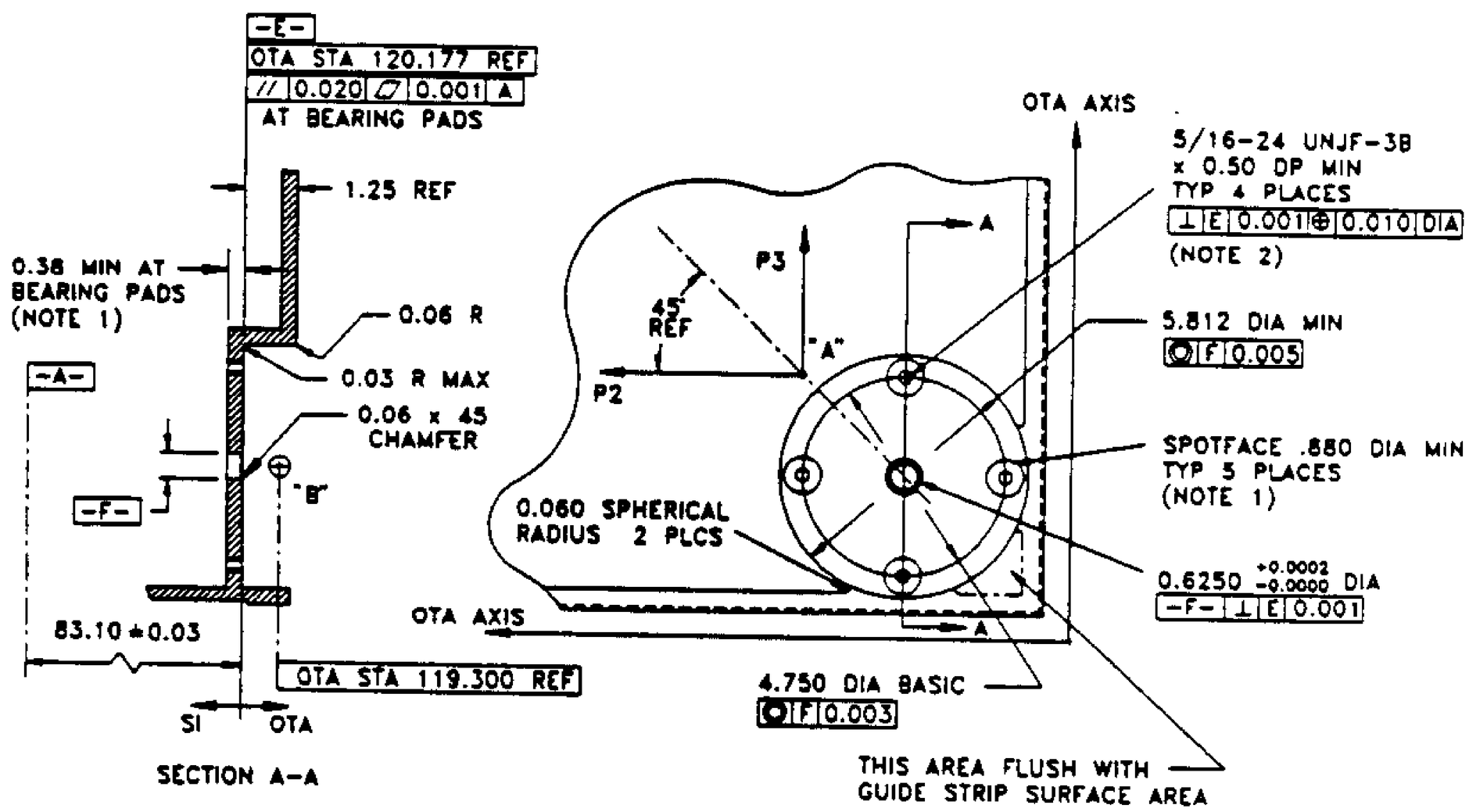

Figure 4.3-5 ORI Mount Point Interface "B"

(NEW PAGE CREATED BY IRN 100)

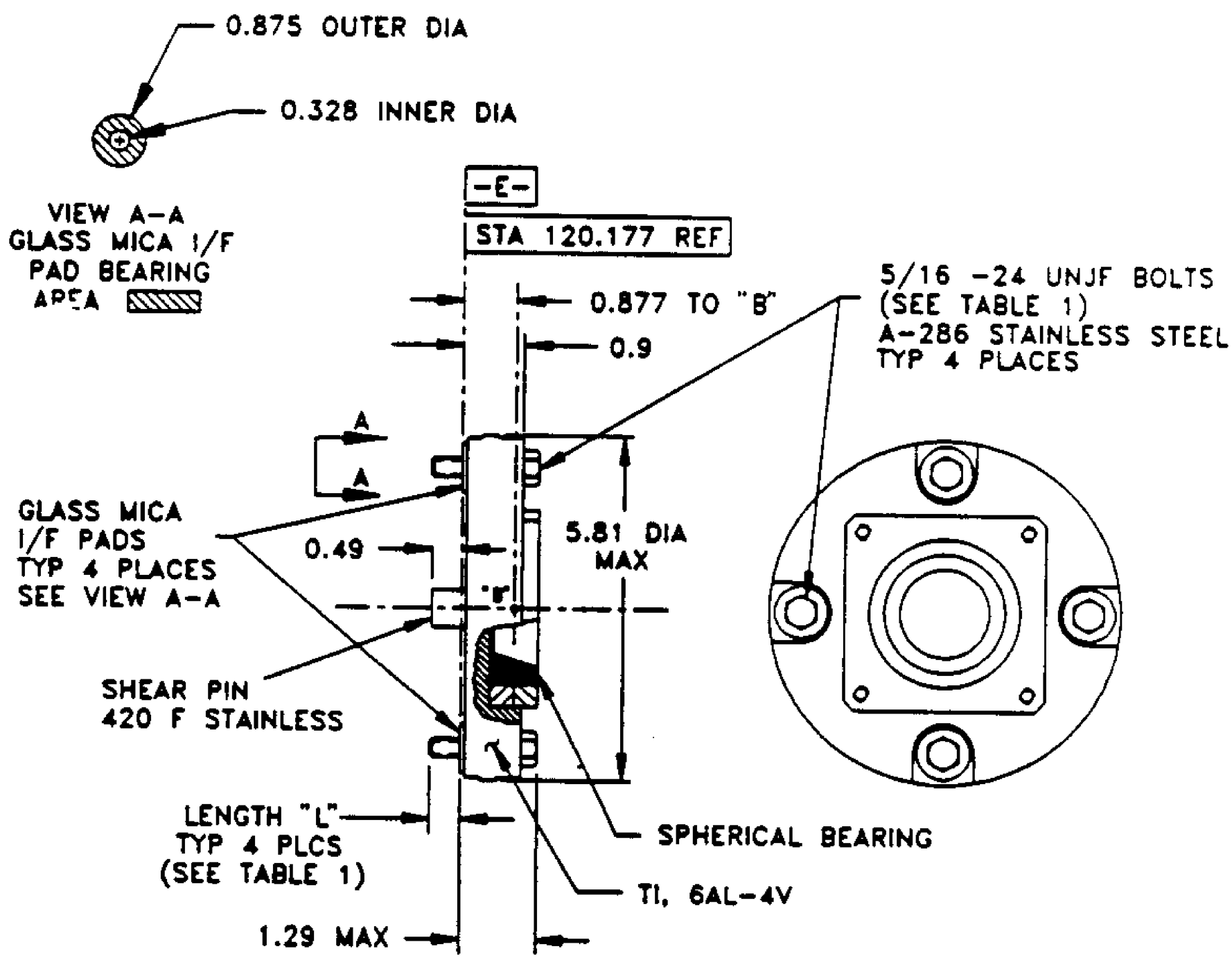

TABLE 1

"L"		REMARKS
MAX	MIN	
0.80	0.50	"L" TO BE SPECIFIED BY SI

Figure 4.3-6 ORI Mount Point Fitting "B" SI Half

IRN 100

(NEW PAGE CREATED BY IRN 100)

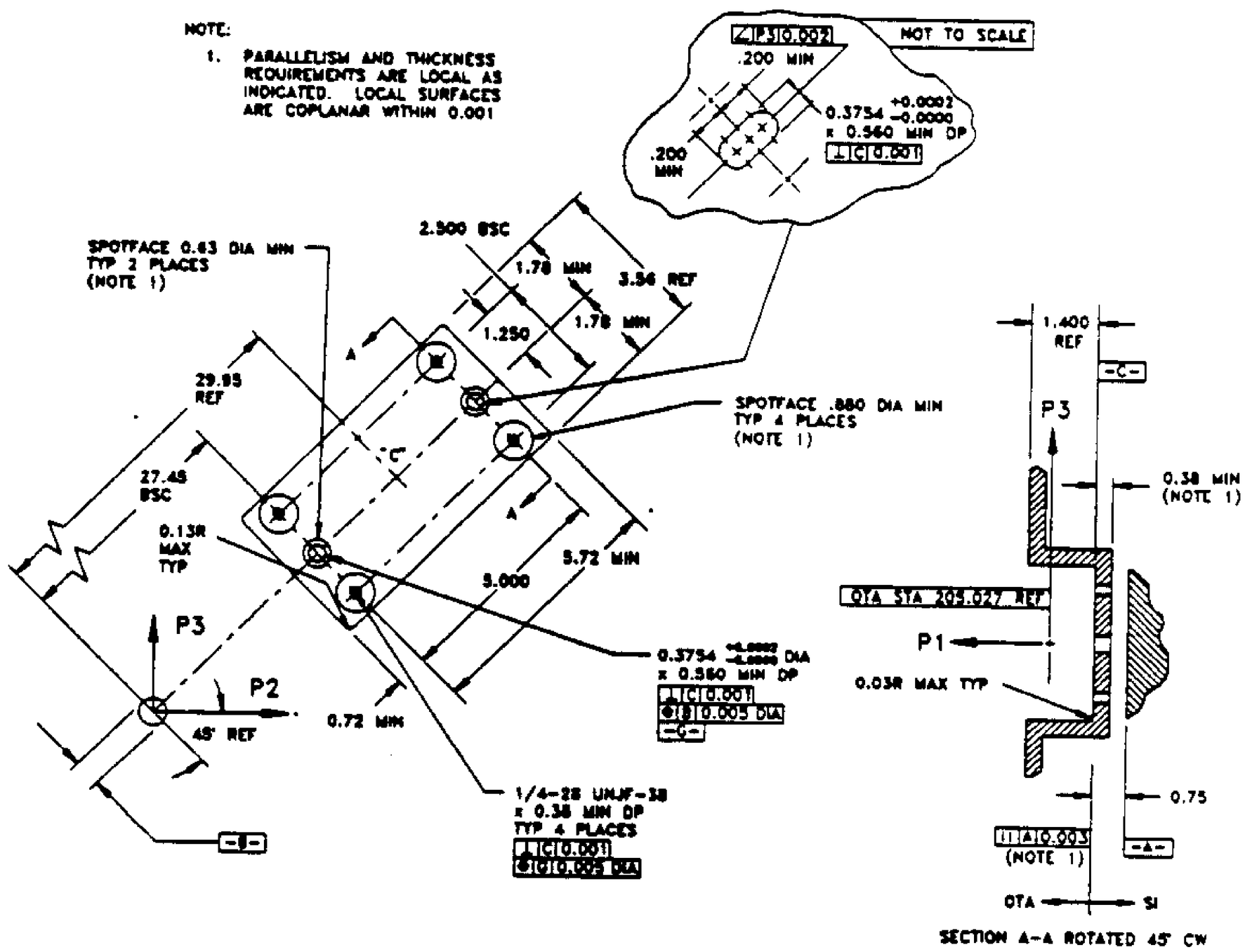

IRN 100

Figure 4.3-7 ORI Mount Point Interface "C"

(NEW PAGE CREATED BY IRN 100)

TABLE 1

"L"		SHEAR PIN LENGTH	REMARKS
MAX	MIN		
0.70	0.44	0.54 MAX	"L" TO BE SPECIFIED BY SI

IRN 100

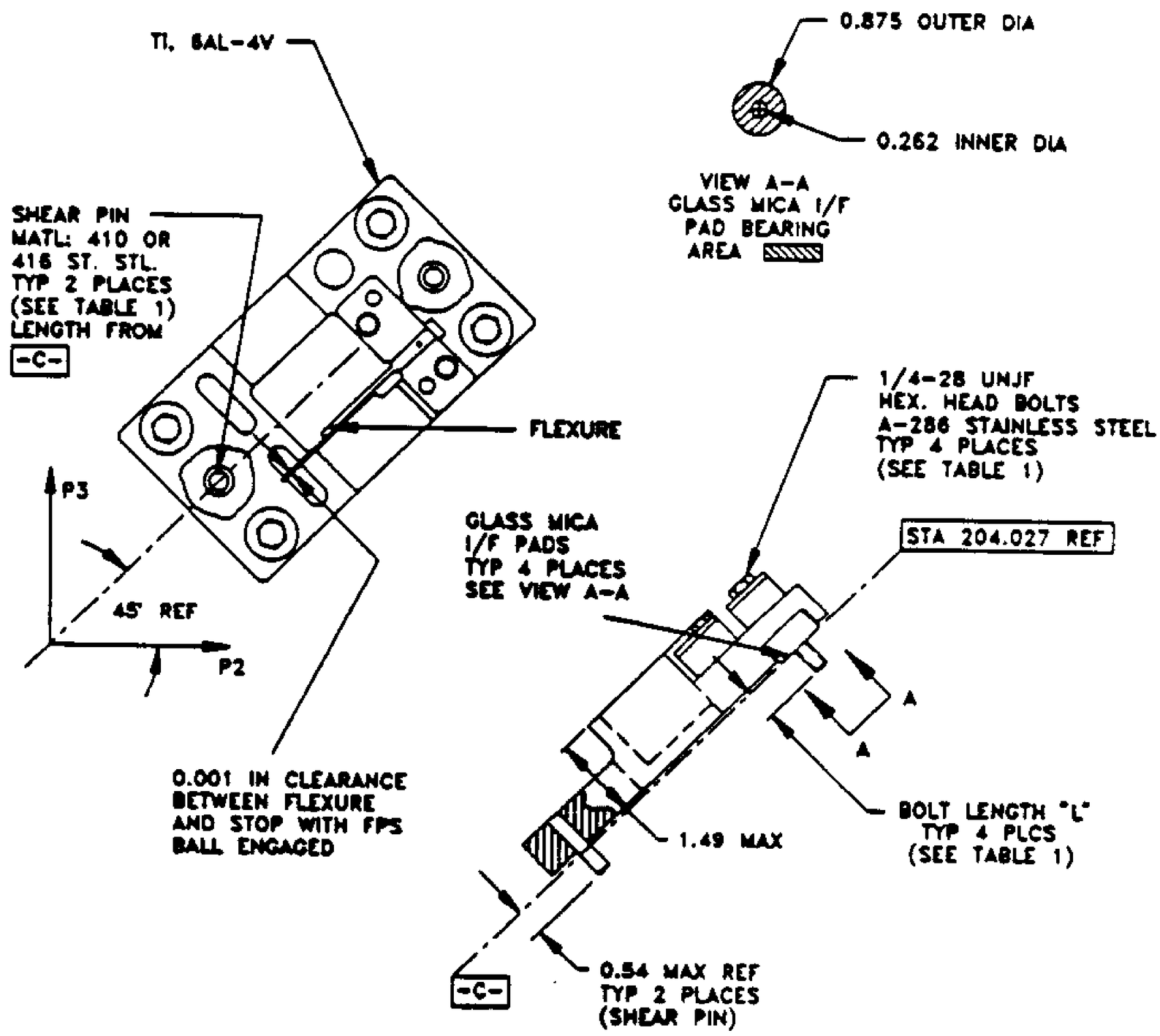

Figure 4.3-8 ORI Mount Point Fitting "C" SI Half

(NEW PAGE CREATED BY IRN 100)

IRN 100, 117

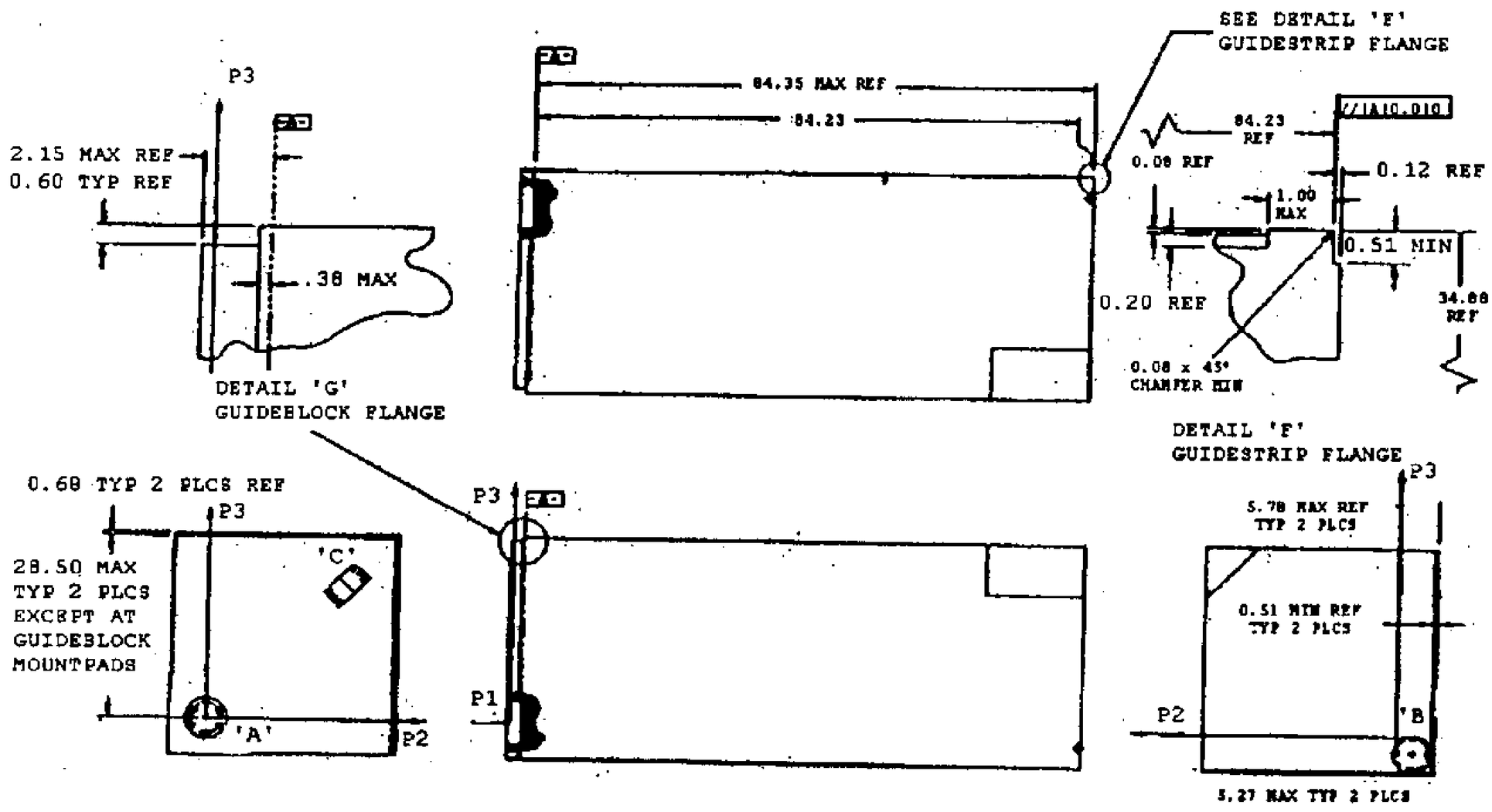

Figure 4.3-9 ORI Guide Block & Strip Interface Envelope

IRN 100, 117

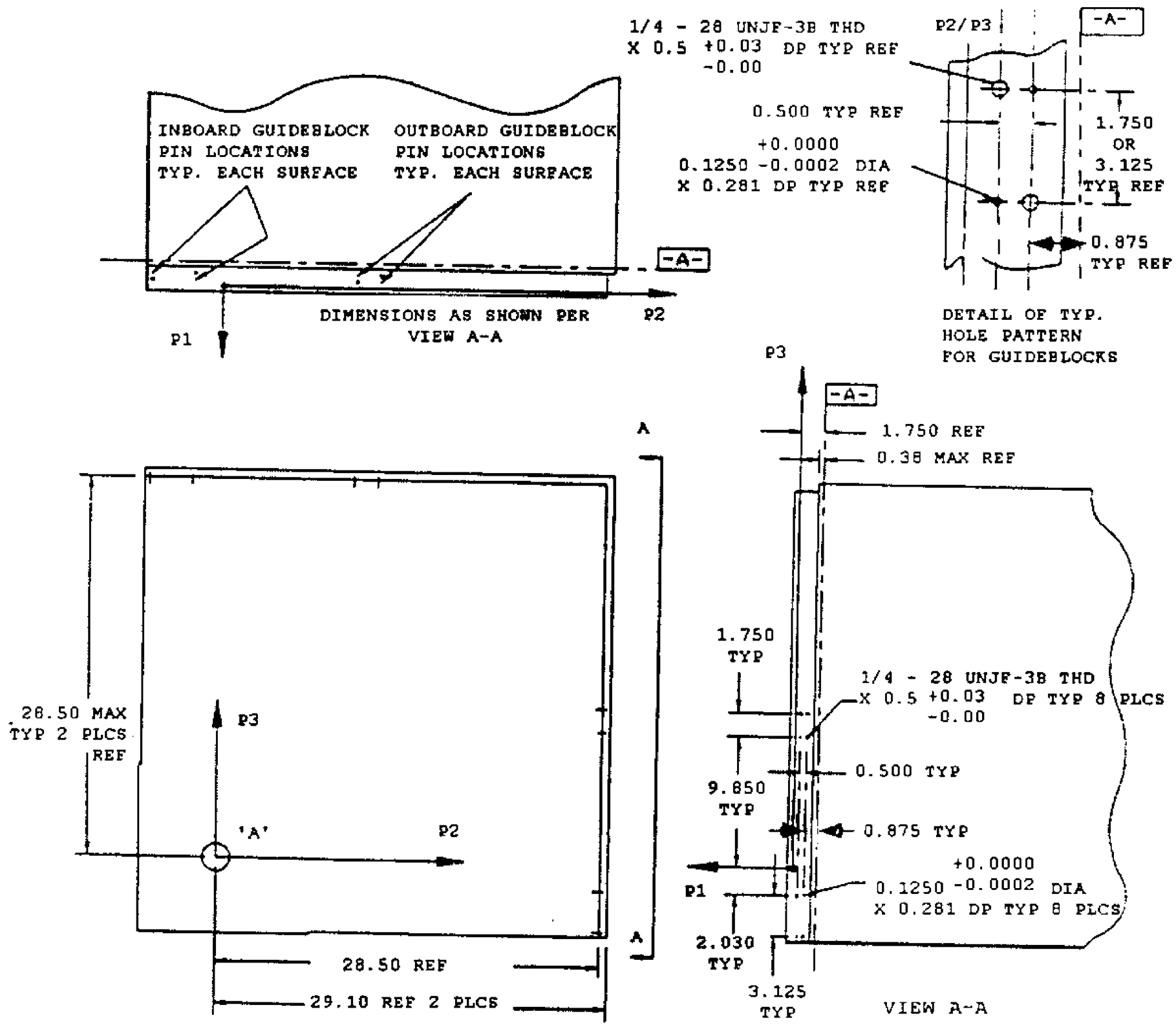

Figure 4.3-10 ORI Forward Guide Block Interface

IRN 100, 117

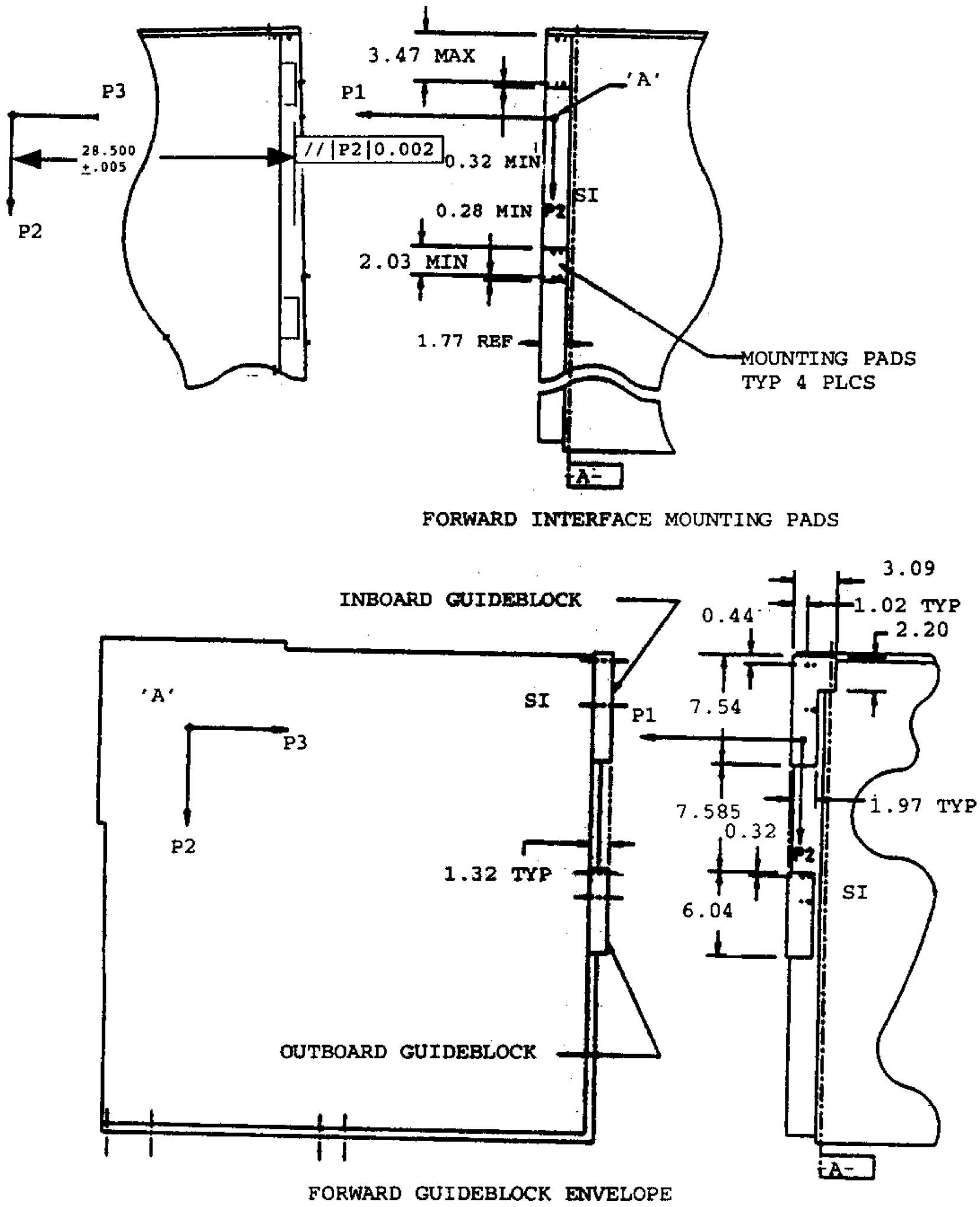

NOTE: Dimensions, locating guide block mounting pads and defining guide block envelopes, are identical for Bays 2 and 4 also, except that the P2, P3 reference directions are interchanged.

Figure 4.3-11 ORI Forward Guide Block Interface & Envelope For Bays 1 & 3

(This supersedes page 4.3-14 dated 29 May 1992)

IRN 100, 117

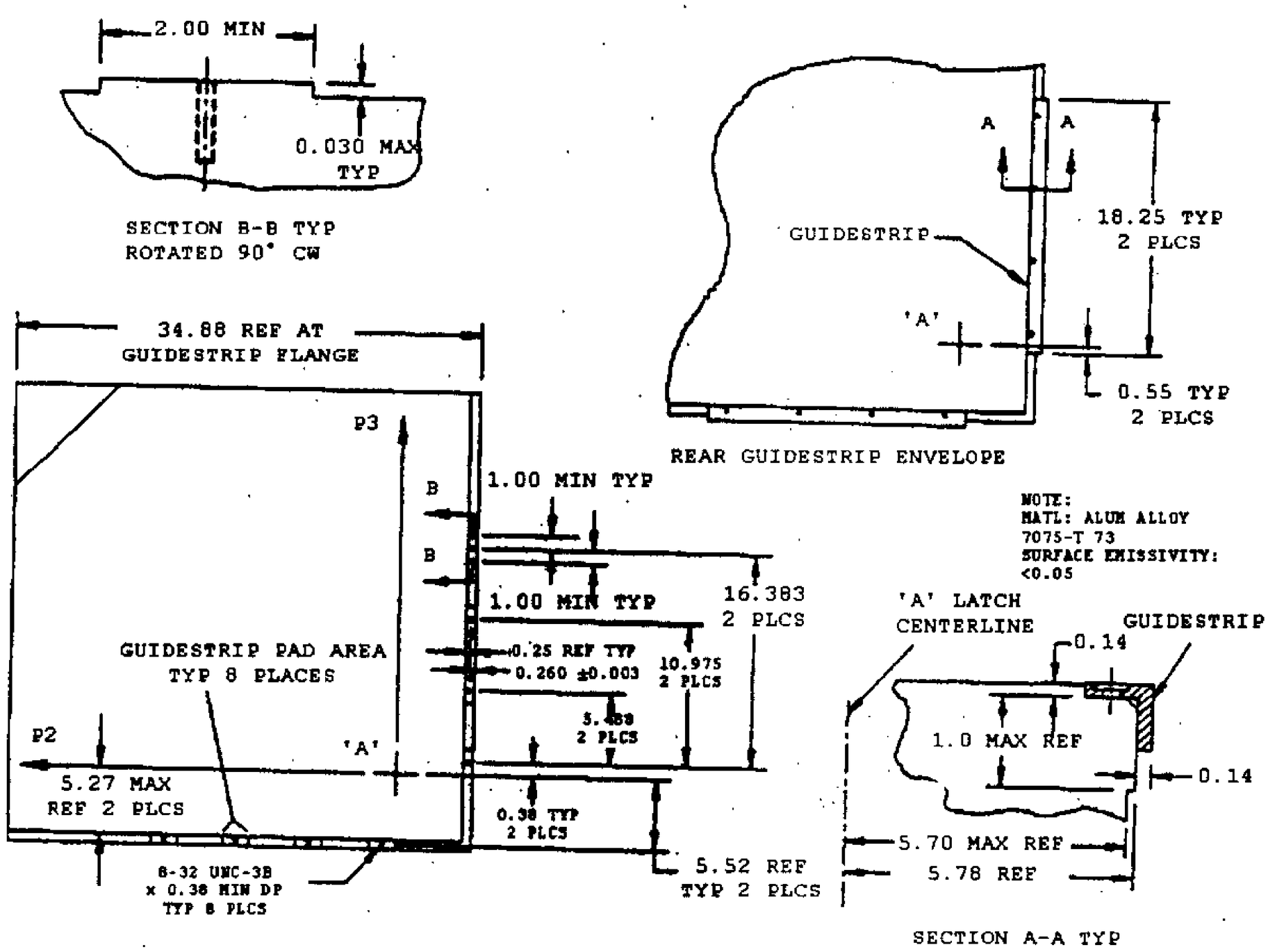

Figure 4.3-12 ORI Aft Guide Strip Interface

IRN 100, 117

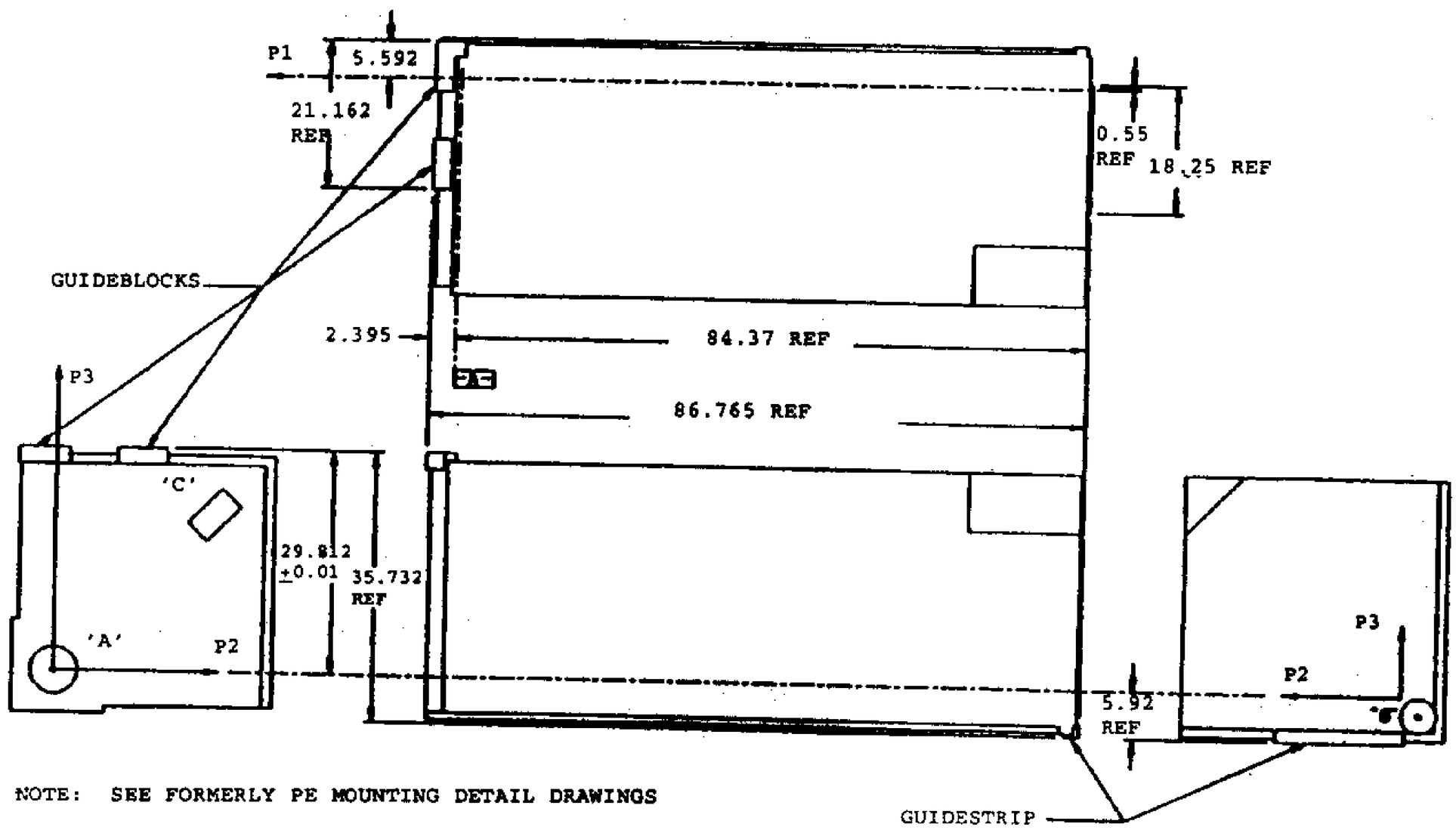

Figure 4.3-13 ORI Guide Block & Guide Strip Interface To Focal Plane Structure For Bays 1 & 3

IRN 100, 117

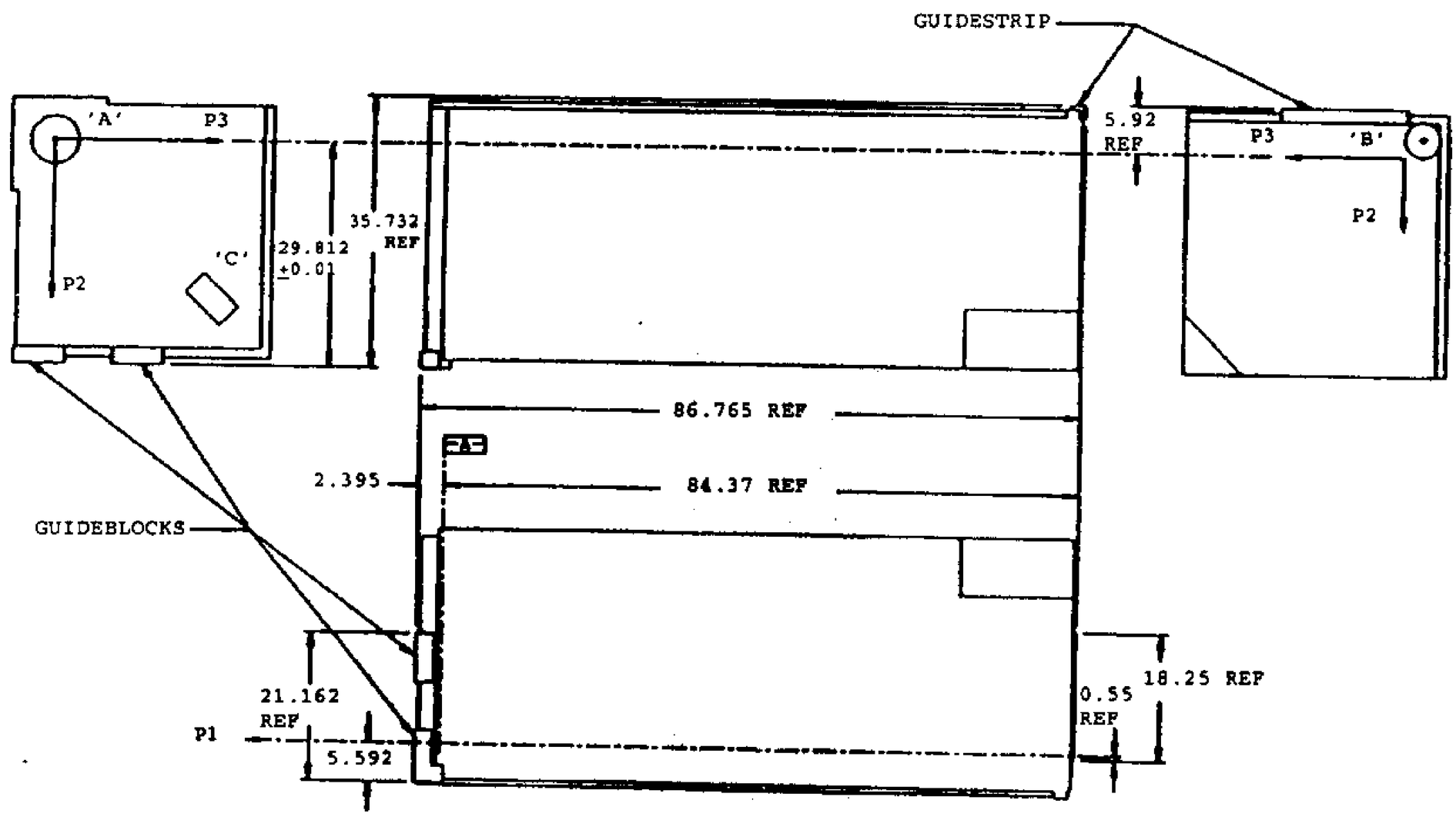

Figure 4.3-13a ORI Guide Block & Guide Strip Interface To Focal Plane Structure For Bays 2 & 4

4.3.4 Ground Handling Interface. All SIs shall be designed installation or removal into test fixtures, during ground operations, in the vertical position (+P1 pointing up), or in the horizontal position.

Government provided ground support equipment (GSE) interfaces with the SI, in a statically determinate manner, at the GSE interface hard-points shown in Figure 4.3-14. The GSE provides the capability to lift the SI from either the P1 horizontal or the P1 vertical attitude. The static deflection of the SI, with the +P1 axis up when lifted by the GSE hard-points, is not to exceed .06 inches with respect to the GSE hard-points. IRN 100

Each of the +P2 and +P3 faces of the SI, containing the GSE interface points, shall be readily accessible and unobstructed when the SI is presented to the GSE (either from its shipping container or receiving inspection dolly as appropriate).

The SI design shall be such that either of the two GSE three-point attachment patterns supports the full SI weight in any attitude prior to installation into the SIPE or other GSE.

4.3.5 Space Support Equipment Interface. The Space Support Equipment (SSE) interface on the SI for the axial SI positioning handle is given in Figure 4.3-15. Other SSE may be provided that interfaces with the GSE interface points as shown in Figure 4.3-14.

4.3.6 EVA Handholds. The EVA handhold interface for the first servicing mission SI, COSTAR, is shown in Figure 4.3-15a. For the second and subsequent servicing missions, the interfaces shall be as shown in Figure 4.3-15b. These are for the attachment of handholds and/or equipment tethers as shown in Figure 4.3-16. Loads for these handholds and tethers are specified in Paragraph 4.5.1.8.1. Handholds and fasteners are provided as GFE and are installed by the SI contractor. IRN 106

(Supersedes Page 4.3-18 dated 29 May 1992)

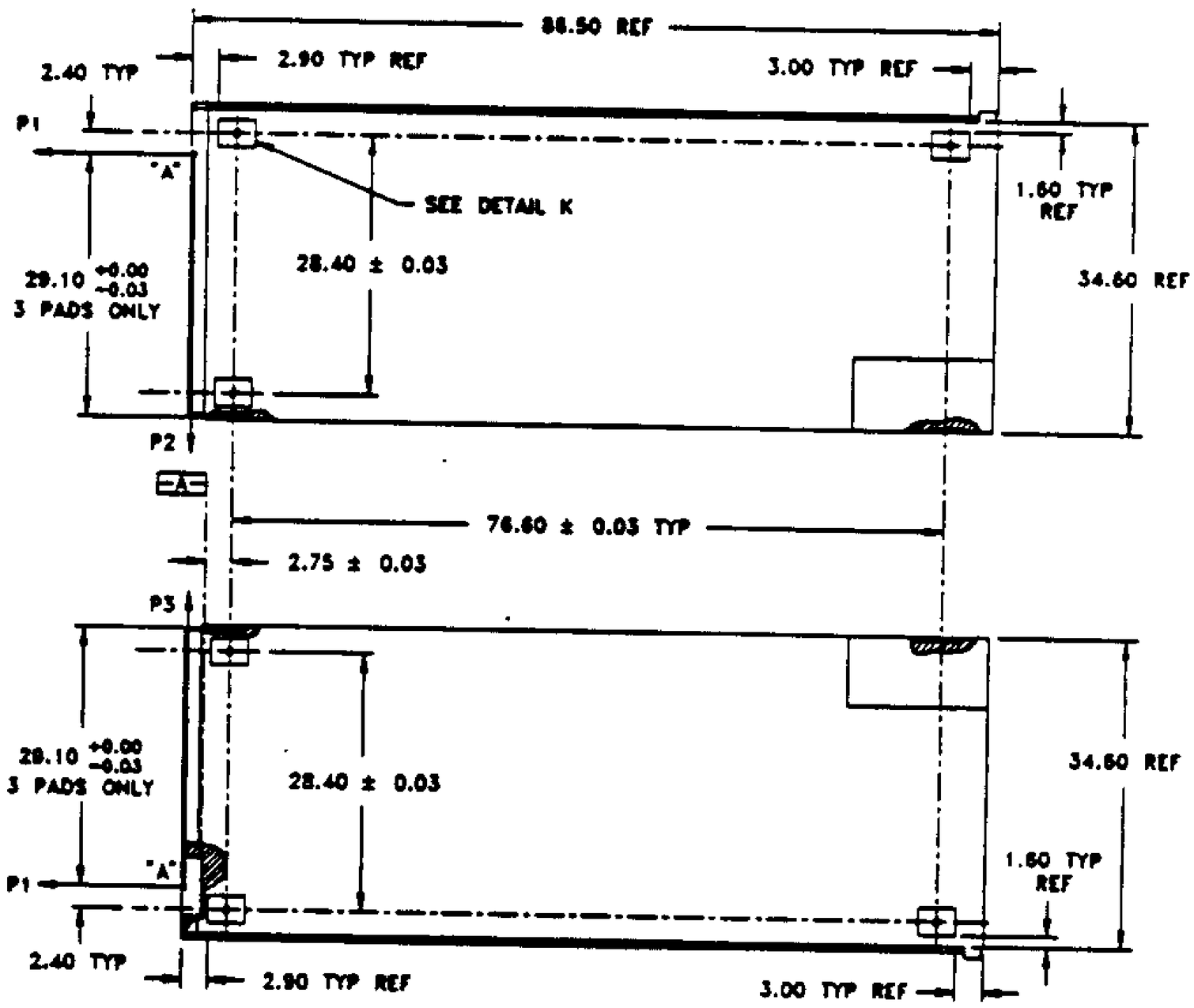

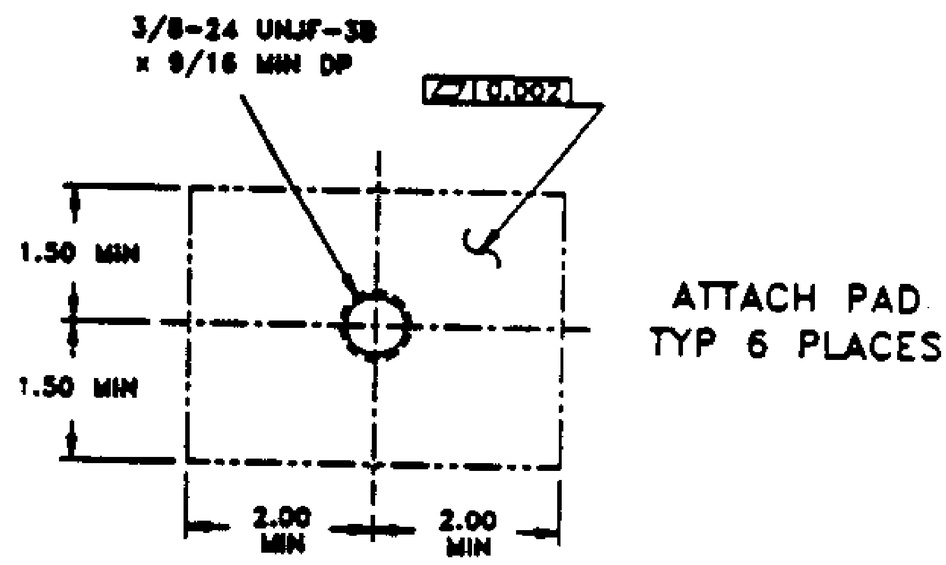

DETAIL K

(NEW PAGE CREATED BY IRN 100)

IRN 100

Figure 4.3-14 ORI SI/GSE Interface

IRN 106

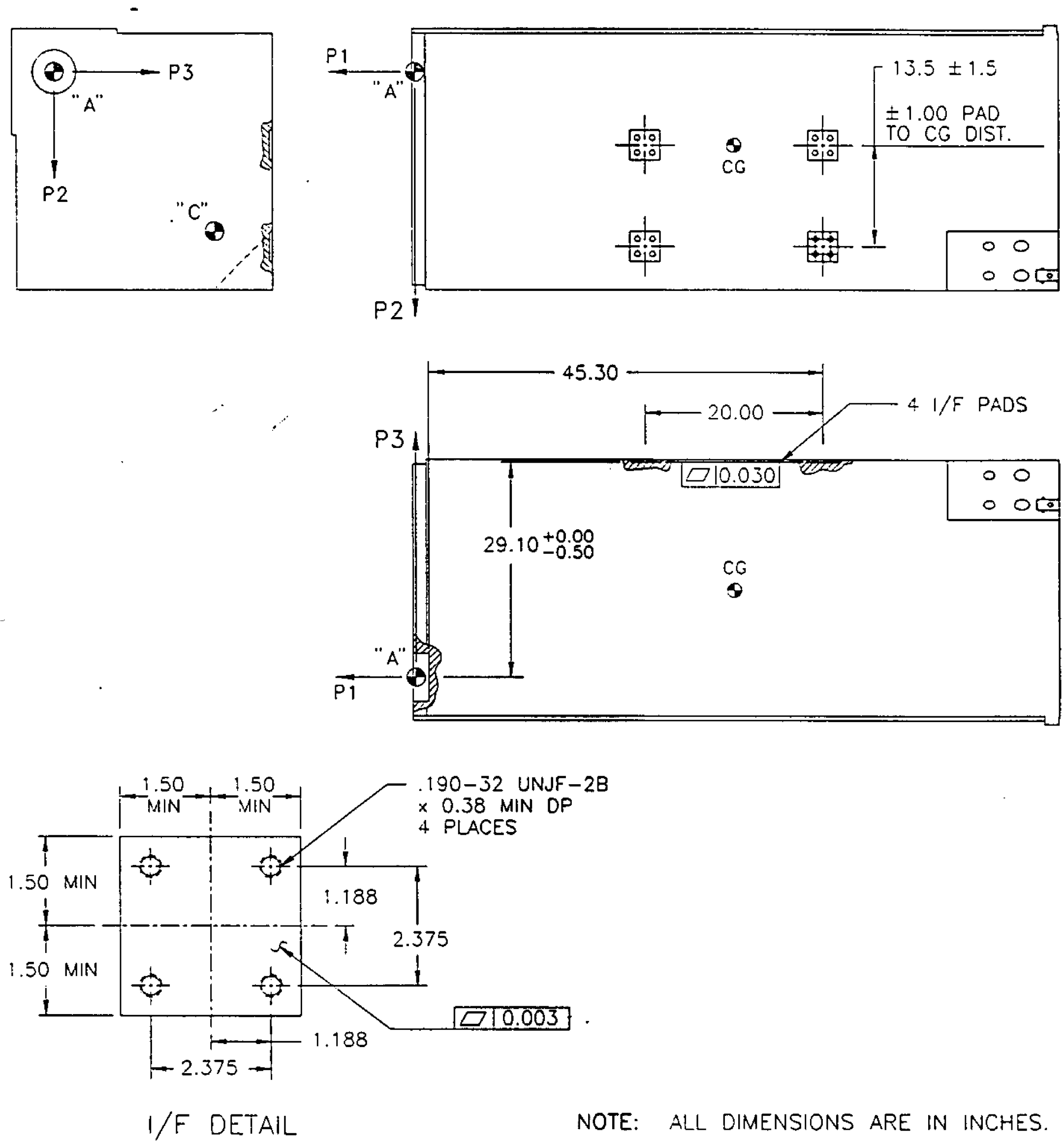

Figure 4.3-15a SM-1 EVA Handhold Interface
(Supersedes Page 4.3-20 dated 29 May 1992)

IRN 106

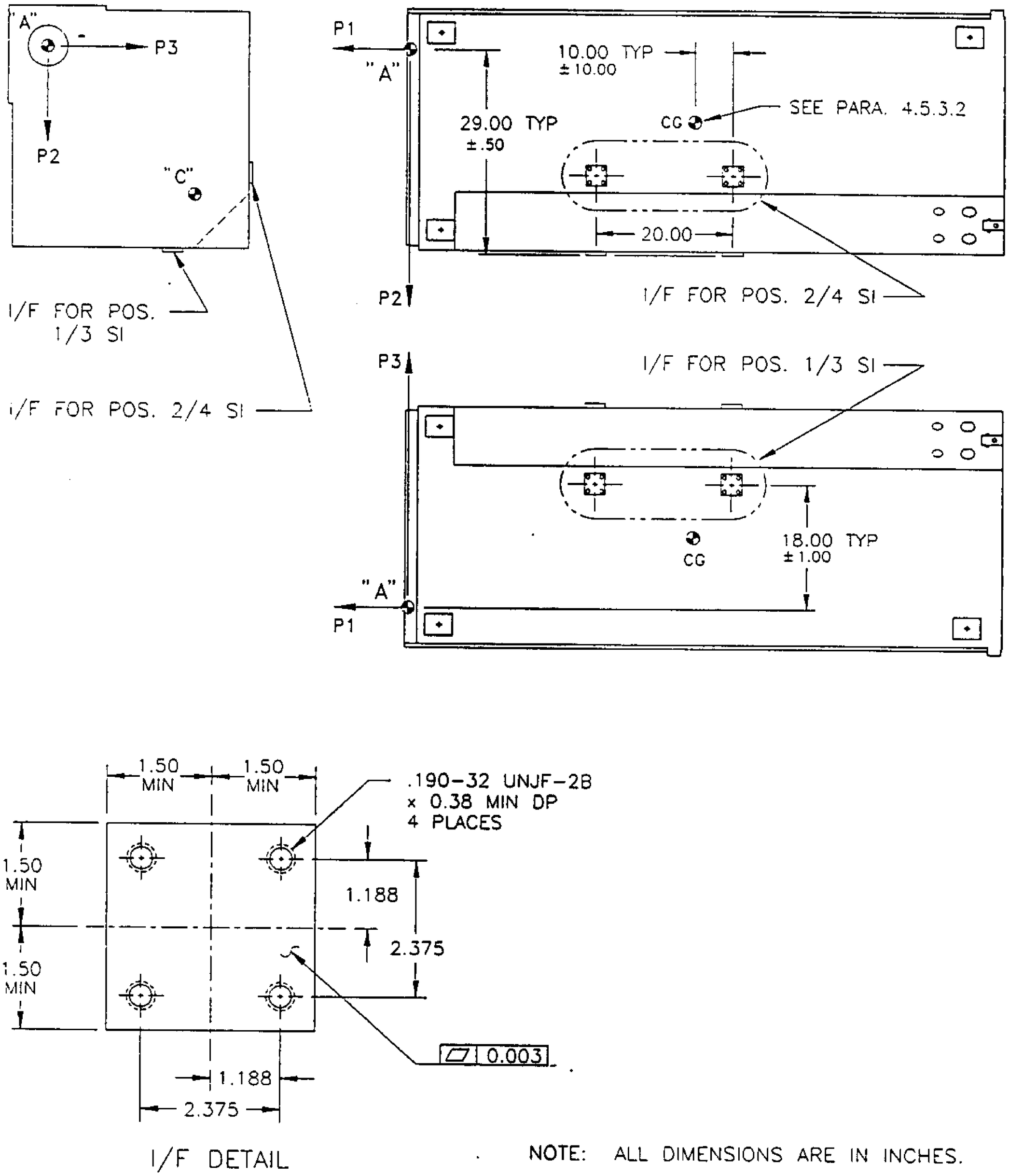

Figure 4.3-15b SM-2 EVA Handhold Interface
(New Page Created by IRN 106)

NOTES:

1. COLOR AND SURFACE FINISH ARE GOLD ANODIZED
2. SEE FIGURE 4.3-15 FOR BOLT PATTERN AND DISTANCE BETWEEN MOUNTING PADS

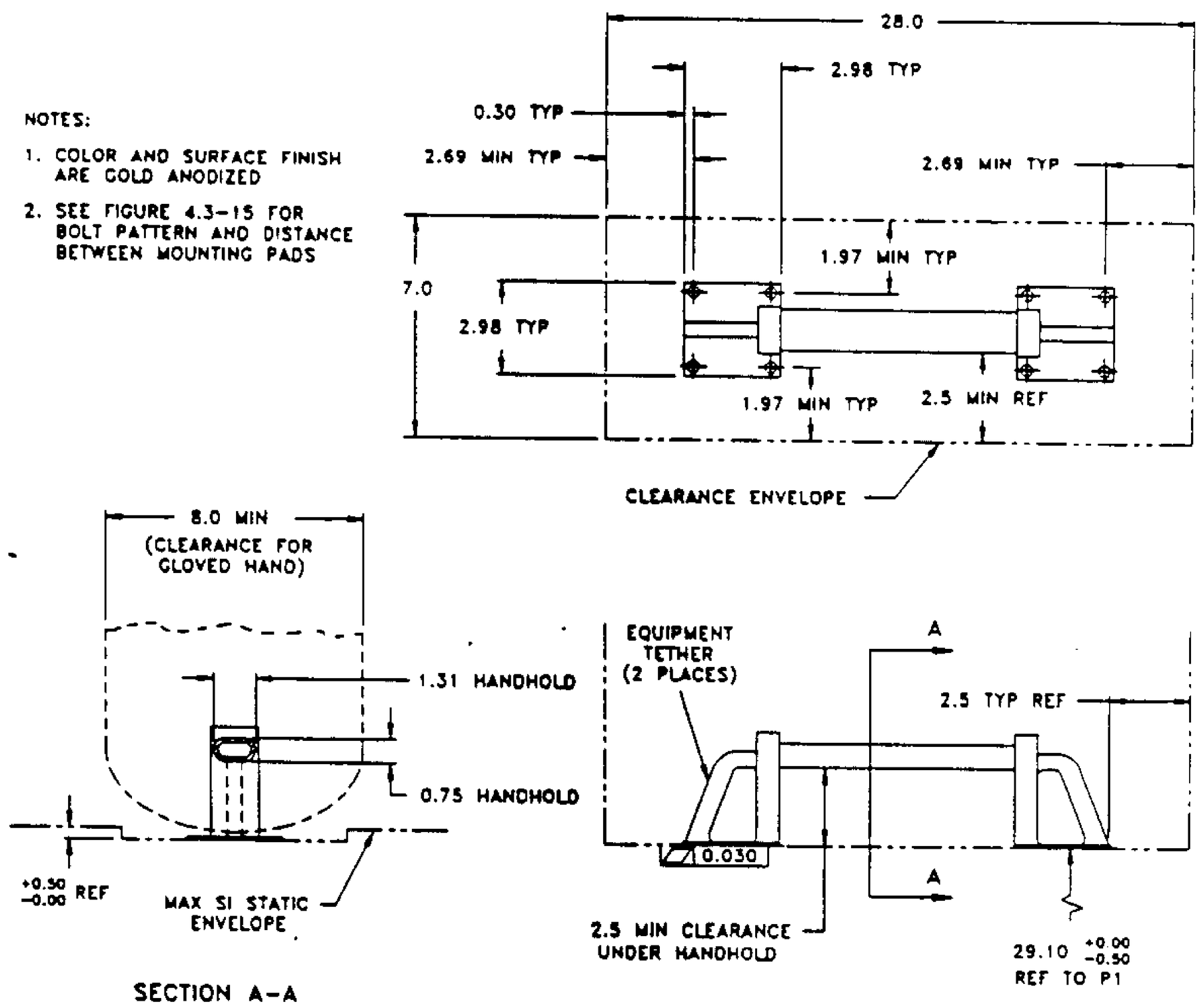

Figure 4.3-16 ORI SI Handhold And Minimum Clearances

IRN 100

(NEW PAGE CREATED BY IRN 100)

4.3.7 ALIGNMENT. Alignment values in this section include all mechanical, latching mechanism, thermal, and optical effects. The alignment stability applies to any point in the data field of view.

4.3.7.1 ALIGNMENT OF SIs WITHIN THE OTA. The origins of the four axial SI coordinate systems, mount points "A", are located at the following HST coordinates: IRN 100

SI Positions	"F" Dimension (Ref. Fig.4.3-1	V1	V2	V3
1	4.841 ± 0.006	205.031 (Ref.)	6.421 ± 0.006	6.428 ± 0.006
2	4.837 ± 0.006	205.027 (Ref.)	6.421 ± 0.006	-6.373 ± 0.006
3	4.833 ± 0.006	205.023 (Ref.)	-6.378 ± 0.006	-6.372 ± 0.006
4	4.837 ± 0.006	205.027 (Ref.)	-6.378 ± 0.006	6.428 ± 0.006

The orientations of the centerlines of the A and C mount points with respect to the HST coordinates as measured in a positive direction from the +V2 axis are as follows:

SI Positions	Orientation
1	45.0128 deg. (Ref.)
2	314.9967 deg. (Ref.)
3	225.0086 deg. (Ref.)
4	135.0233 deg. (Ref.)

The SI P1 axis is parallel to the HST V1 axis within 30 arc sec. The SI P2 and P3 axes are oriented by the A and C mount points, as defined above, to within 40 arc sec.

4.3.7.2 Short Term Stability of OTA/SI Alignment. (24 Hours) During science mission observations by an SI, the maximum displacement of the SI registration fitting "A" with respect to the OTA focal surface is ± 0.3 μm in V2 or V3 and ± 7.5 μm in V1 during any single exposure period. The single exposure period is the entire period of time that the HST is registered on a target and is receiving information.

Maximum rotations of any SI about its registration fitting "A", constrained by the OTA focal plane structure, are less than ± 0.2 arc-sec. during any single exposure period.

(NEW PAGE CREATED BY IRN 100)

Axial separation between surfaces A and E (Figure 4.3-5) shall not change by more than 0.050 inches during any HST constant orientation 24 hour period. If the axial SI is held in single mode (operational or hold) for this period the axial length change shall be less than 0.040 inches. The maximum change in SI average effective sink temperature during this period shall be as specified in paragraph 4.6.1.1.3.2. OTA focus change during any 24 hour period is less than 250 microns (3σ). IRN 10

4.3.7.3 Long Term Stability of OTA/SI Alignment. (100 Hours) Long term stability is defined as that which is applicable to pointing repeatability. The maximum displacement of the SI registration fitting "A" with respect to the OTA focal surface is ± 1 μm in V2 or V3 and to within ± 7.5 μm in V1.

Maximum rotations of any axial SI about its registration fitting "A", constrained by the OTA focal plane structure, are less than ± 0.5 arc-sec.

4.3.8 Orbit Removal and Installation. All SIs are designated as Orbit Replaceable Units (ORUs).

Removal and installation of each axial SI is primarily along the V2 axis and this does not require the removal of any other scientific instrument.

The OTA/SI interface is indexed to the OTA structure to provide the necessary alignment within allowable tolerances without in-orbit adjustment.

4.3.8.1 Crew and SI Safety During Change-out. Shields or covers shall be provided by the SI for non-ruggedized portions and external optical elements of the axial SI to protect them from damage by an EV crewmember and from contamination during in-orbit changeout operations.

All corners and edges exposed to the EV crewmember shall have 0.25 inch minimum radius. These radii can be replaced with a 45 degree chamfer with leg dimension equal to the specified radius with the resulting edges broken to 0.06 inch radius. Protruding edges of thickness less than 0.25 inches exposed to the EV crewmember shall have full radius or shall be rolled or curled.

(NEW PAGE CREATED BY IRN 100)

Access holes or openings in the dimensional range of 0.75 to 1.3 inches shall be guarded if exposed to the EV crewmember gloved hand. Small protrusions of less than 0.187 inches shall be rounded to a radius of 0.06 inches. Edges of exposed mismatched surfaces (of less than 0.187 inches) shall be either smoothed and rounded to 0.06 inch radius, chamfered to 0.06 inch by 45 degrees or covered by an appropriate material. IRN 100

When exterior MLI is used on the axial SI, the outer layer must be 0.002 inches minimum. Vent holes in the exposed surface of MLI shall be less than 0.4 inches in diameter to prevent snagging. SI changeout shall not require MLI removal or alteration. The total MLI blanket thickness shall be included in design solutions to meet the edge and corner requirements for crew safety.

4.3.9 Electrical Connector Locations. Electrical connectors shall be located on each SI as shown in Figures 4.3-17 and 4.3-18. A test connector cover is provided as GFE.

4.3.9.1 Ground Strap Location. The portion of the ground strap which mates with the SI is shown in Figure 4.3-17. The ground strap was supplied by the OTA contractor. A Crew Aid Ground Strap Attachment Fitting, which contains a captive bolt for securing the ground strap, is also shown in Figure 4.3-17. The Crew Aid Ground Strap Attachment Fitting is supplied as GFE and is installed by the SI contractor.

4.3.10 Paragraph Deleted

4.3.11 Venting Pressurization and Purge. Vents for the Axial SIs shall be located in the zone of the -P1 face of the instrument as shown in Figure 4.3-19. The purge fitting may be located on each SI as shown in Figures 4.3.17 and 4.3-18. Other configurations for the purge fitting, such as on a removable contamination cover on the forward end of the SI, will be considered on a case by case basis. Specification of the purge gas is the responsibility of the SI contractor. Purge gas with a specification greater than Grade B shall be supplied by the SI contractor.

4.3.12 Cryogenic System. For any SI using cryogenic cooling the options for the location of the cryogenic exhaust vents, fill tubes and associated components are shown in Figure 4.3-19.

(NEW PAGE CREATED BY IRN 100)

4.3.12.1 Venting System. The venting system shall discharge the spent cryogen to space and shall not leak any cryogen into the aft shroud. The HST aft shroud bulkhead has two adapters. Either one can be removed in orbit and replaced with components needed by an SI for venting cryogen. Figure 4.3-20 shows the aft shroud locations of the cryogenic vent ports. Figure 4.3-21 shows the details of the cryogenic vent ports which are in the aft bulkhead of the HST. IRN 100

The venting system shall be designed and supplied by the SI contractor. The system shall satisfy its performance requirements during ground testing and after delivery and installation into the orbiting HST.

The design shall put high priority on minimizing the EVA time required to connect the system to the HST.

4.3.12.2 Hold Time. The cryogenic system shall be designed and serviced so as to require no operational venting until after installation of the SI and its vent line in the HST. IRN 106

4.3.12.3 Safety. The cryogenic system shall meet Category 1 safety requirements for shuttle and astronaut safety. The system shall be two fault tolerant to loss of the HST mission. IRN 100

4.3.12.4 Light Leaks. The venting system shall be light tight.

4.3.12.5 Angular Momentum. To a first order the discharge of cryogen shall not impart angular momentum to the HST.

4.3.12.6 Material Compatibility. In order that cryogen venting shall not degrade coatings or any other materials used in the HST, the cryogens selected shall be approved by the HST Project.

4.3.13 Aft Shroud Cooling System/NICMOS Cooling System. SIs targeted for additional cooling will have mechanical interfaces with the ASCS/NCS as defined in ST-ICD-98. Where ground installed intermediate hardware is required to achieve this interface, such hardware shall be GFE. IRN 117

IRN 100

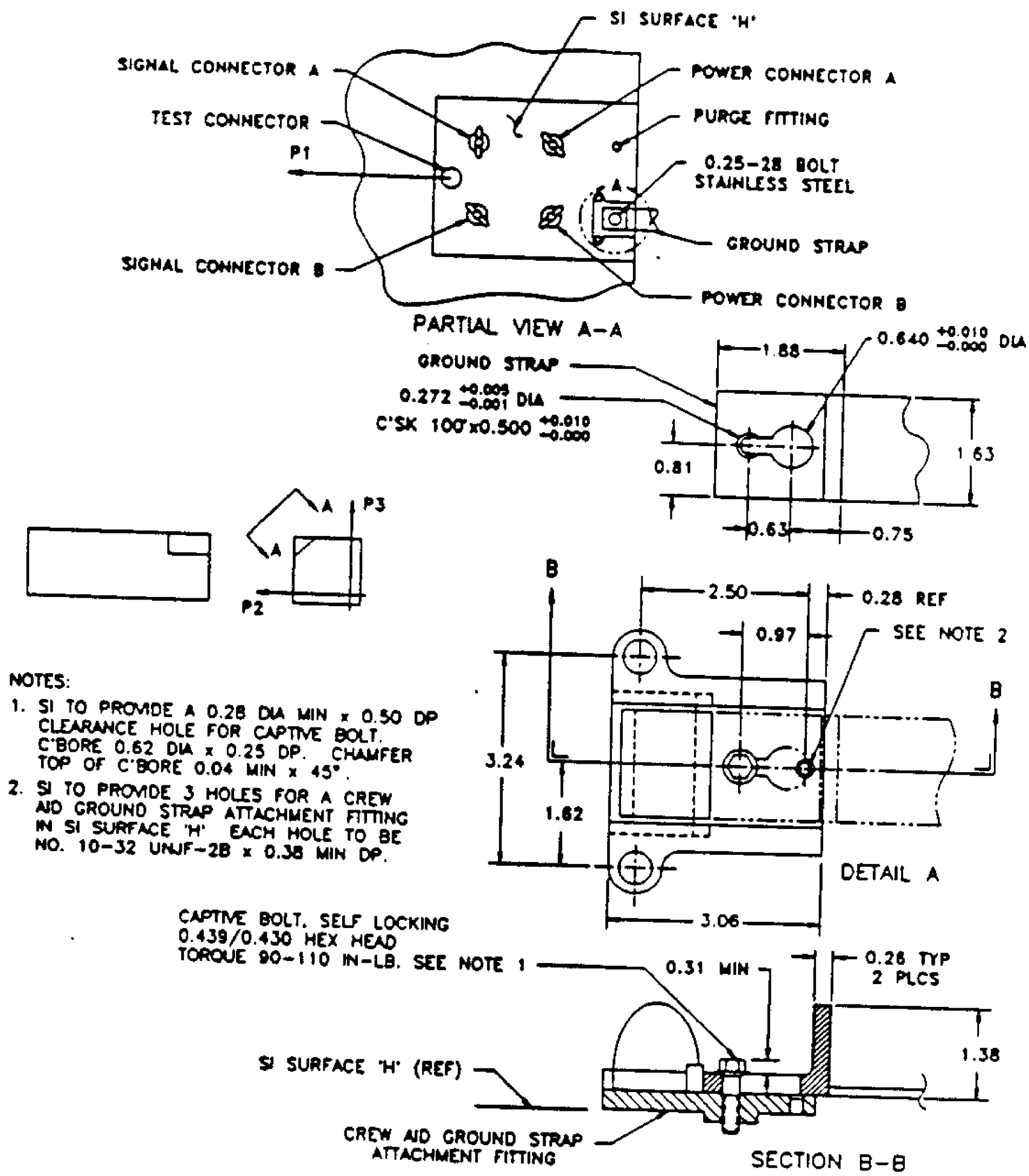

NOTES:

1. SI TO PROVIDE A 0.28 DIA MIN x 0.50 DP CLEARANCE HOLE FOR CAPTIVE BOLT. C'BORE 0.62 DIA x 0.25 DP. CHAMFER TOP OF C'BORE 0.04 MIN x 45°.
2. SI TO PROVIDE 3 HOLES FOR A CREW AID GROUND STRAP ATTACHMENT FITTING IN SI SURFACE 'H' EACH HOLE TO BE NO. 10-32 UNJF-2B x 0.38 MIN DP.

Figure 4.3-17 ORI Electrical Connector And Purge Fitting Arrangement

(NEW PAGE CREATED BY IRN 100)

IRN 100

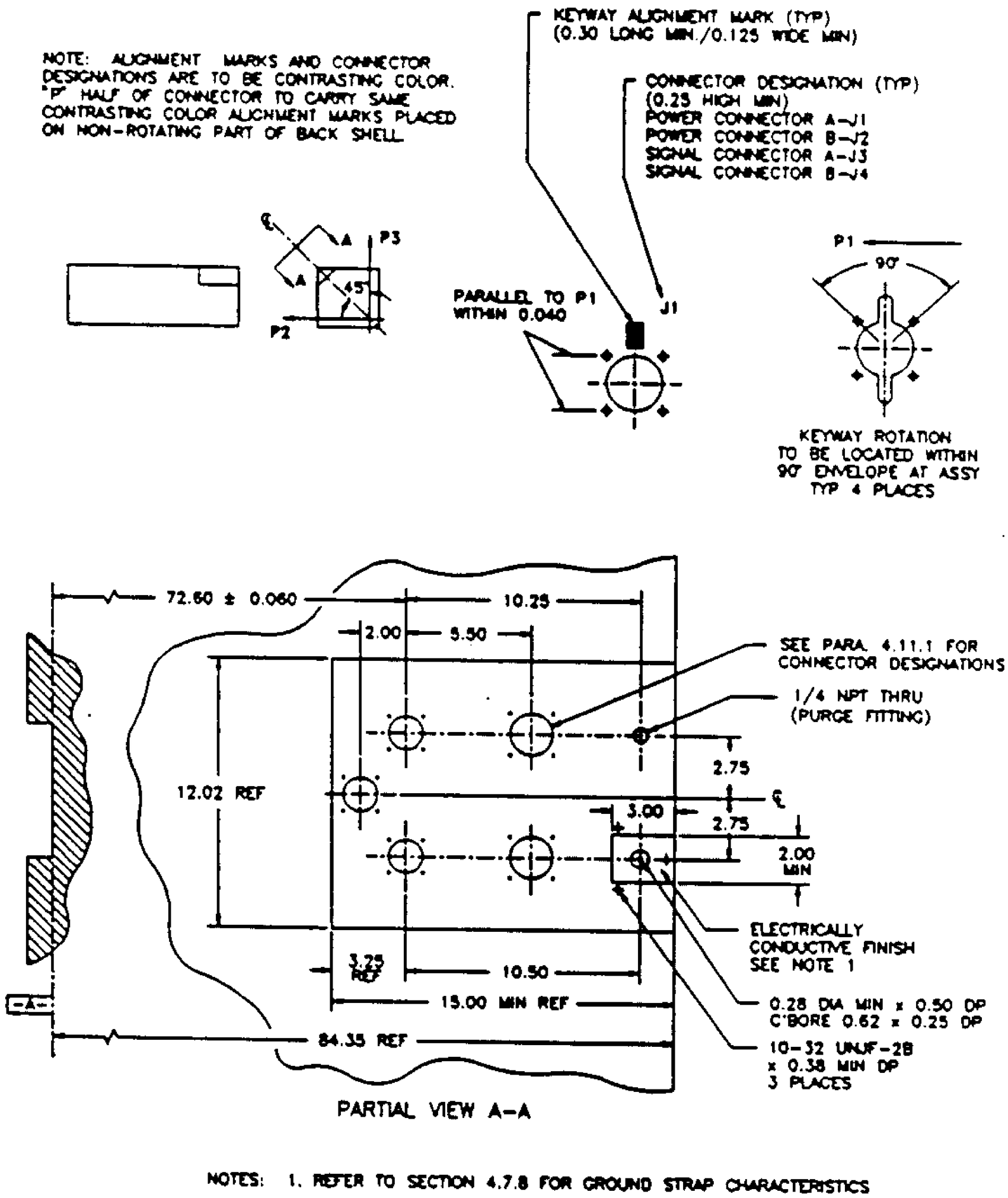

NOTES: 1. REFER TO SECTION 4.7.8 FOR GROUND STRAP CHARACTERISTICS

Figure 4.3-18 ORI Connector And Purge Fitting Details

(NEW PAGE CREATED BY IRN 100)

IRN 100, 117

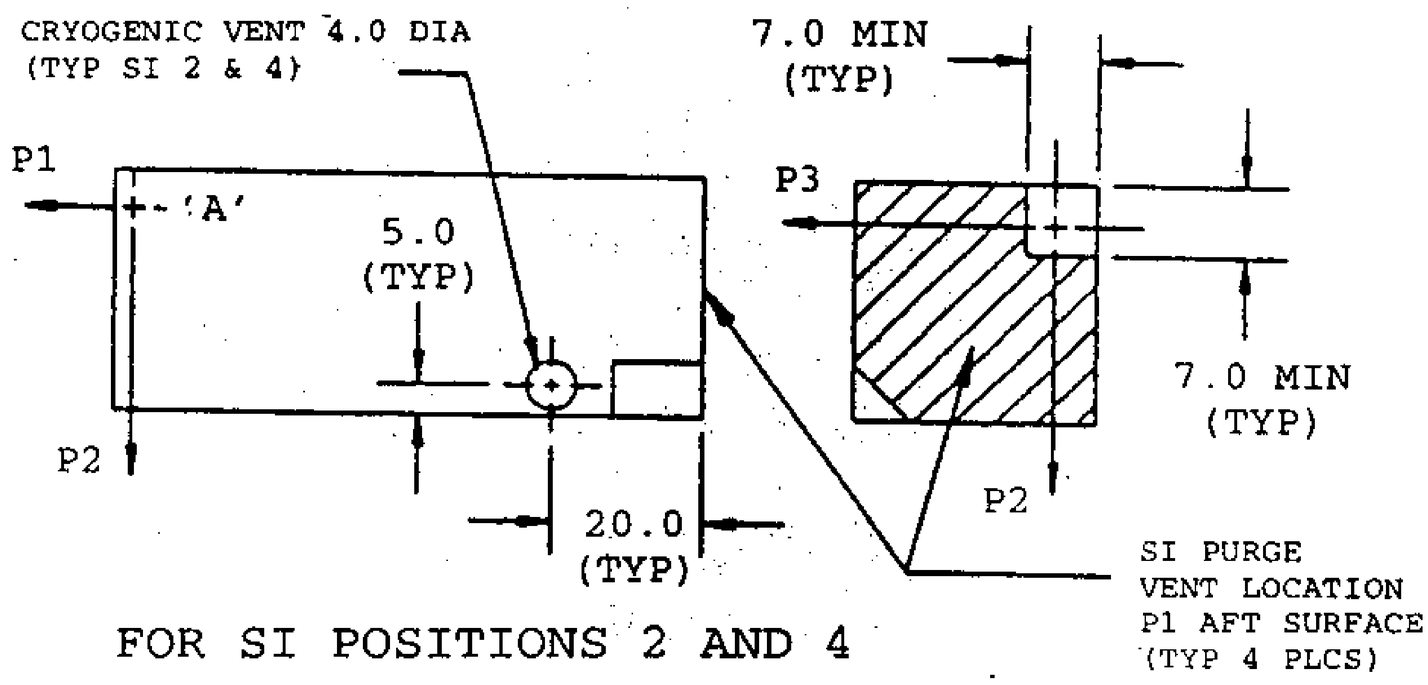

FOR SI POSITIONS 2 AND 4

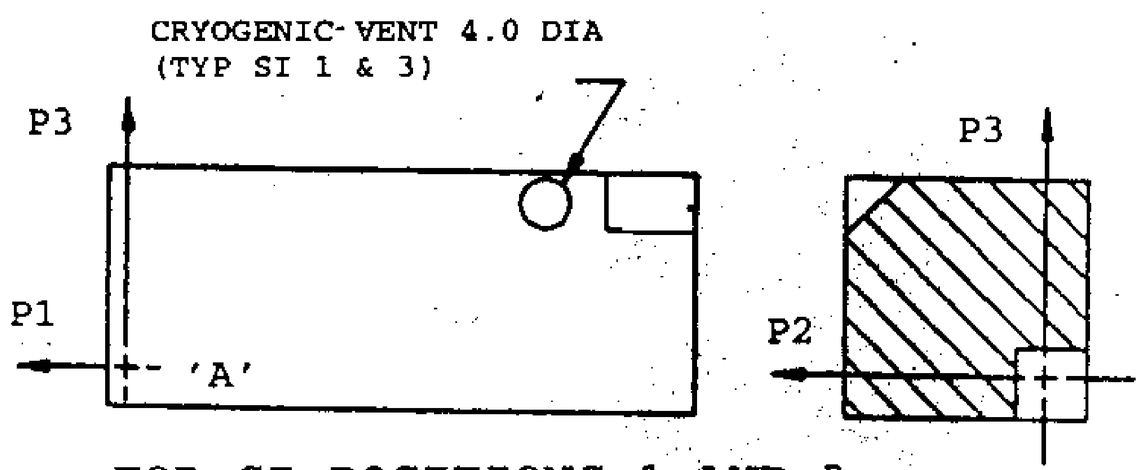

FOR SI POSITIONS 1 AND 3

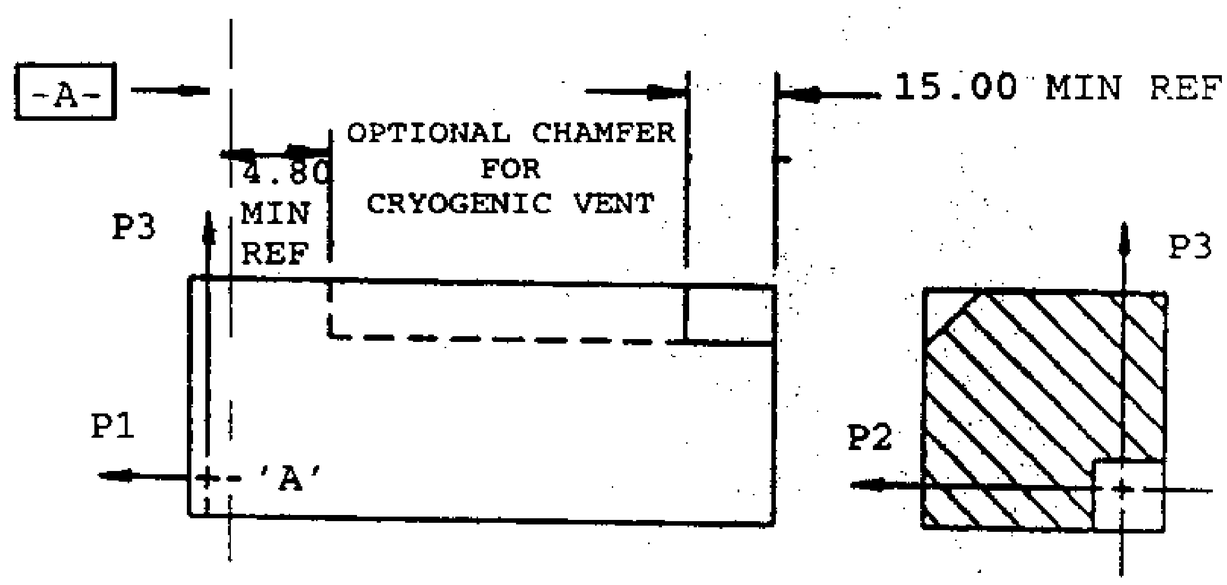

OPTIONAL FOR ALL SI POSITIONS

Figure 4.3-19 ORI Vent Locations

(This supersedes page 4.3-28 dated 29 May 1992)

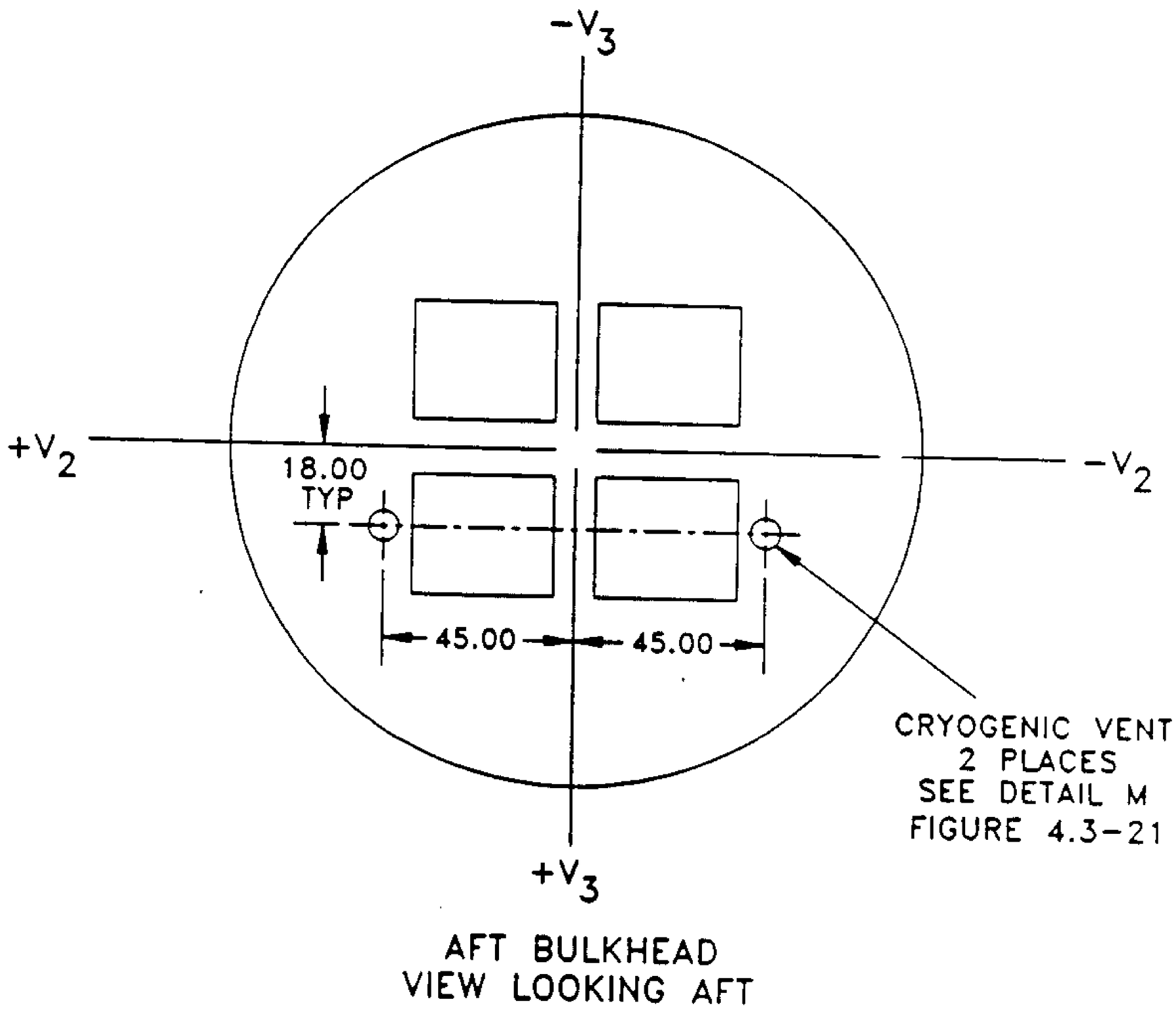

IRN 100

Figure 4.3-20 Aft Shroud Cryogenic Vent Locations

(NEW PAGE CREATED BY IRN 100)

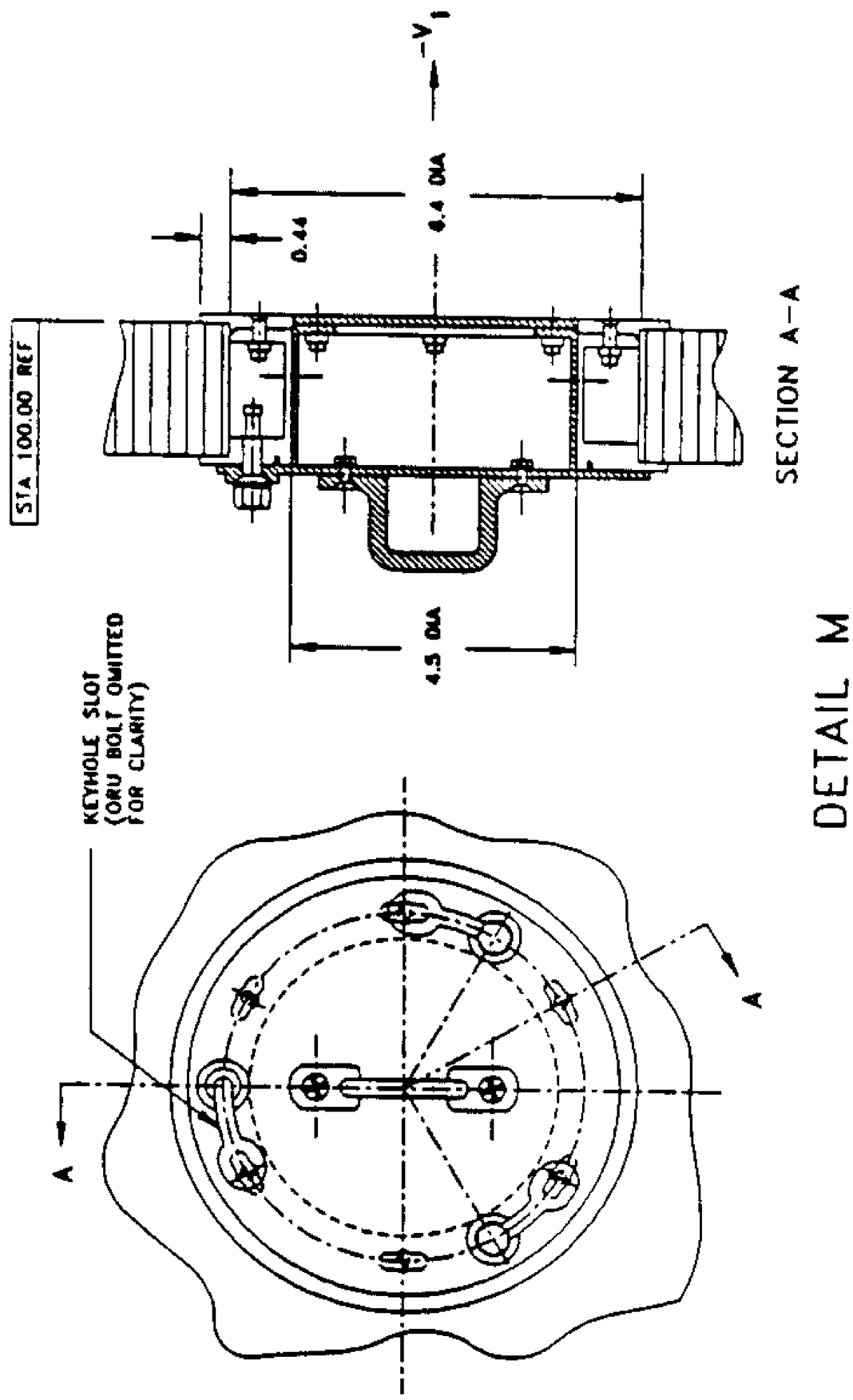

IRN 100

Figure 4.3-21 Cryogenic Vent Port Details

(NEW PAGE CREATED BY IRN 100)

4.4 Optical Interfaces. The as-built conic constant of the primary mirror (PM) was determined from the following: IRN 100, 105

1) Measurements of the null lens used to figure the PM
2) In orbit data from the FOC
3) In orbit data from the WFPC

Based on the above data the Hubble Independent Optics Review Panel (HIORP) determined the conic constant of the HST as-built PM is -1.0139. The OTA nominal optical prescription interface characteristics are defined below:

Optical Prescription

	NOMINAL DESIGN VALUES	AS BUILT VALUES (1σ)
Primary Mirror		
Radius (concave)	11040.000 mm	11041.7 ± 0.3 mm
Conic constant	-1.0022985*	-1.0139 ± 0.00025
Secondary mirror		
Radius (convex)	1358.000 mm	1358.065 ± 0.025 mm
Conic constant	-1.49686*	-1.4960 ± 0.0001
Intervertex Distance[2]	4906.071 mm	4907.01 ± 0.005 mm
f/Number	24	24
Aperture Stop Diameter	2400. mm	2401.11 ± 0.14 mm
Aperture Stop to PM Vertex Distance	80.26 mm	88.43 ± 0.19 mm
PM Vertex to Station 198.44[1]	1500.129 mm	1500.129 mm
Back Focal Distance (SM Vertex to Station 198.44)	6406.200 mm	6407.139 mm
Magnification	10.435	10.438

IRN 106

*Original ICD listed Epsilon (E) values of the conic constant (E = cc+1), where cc is the conic constant.

[1] The OTA paraxial focus is 13.5 mm ± 0.5 mm (1σ) forward of station 198.44. This position will be maintained for the Second Servicing Mission.

[2] The intervertex distance corresponds to the setting of the secondary mirror which causes the encircled energy lying in a circle of 0.1 arcsecond radius to be a maximum for the FOC F/96 camera at a wavelength of 487 nm. The secondary mirror will only be moved to maintain the intervertex distance by compensating for desorption in the graphite epoxy structure of the OTA.

The OTA wavefront residual coma is 1/60th of a wave at λ=0.6328 microns. This position will be maintained for the Second Servicing Mission.

(Supersedes Page 4.4-1 dated 18 March 1994)

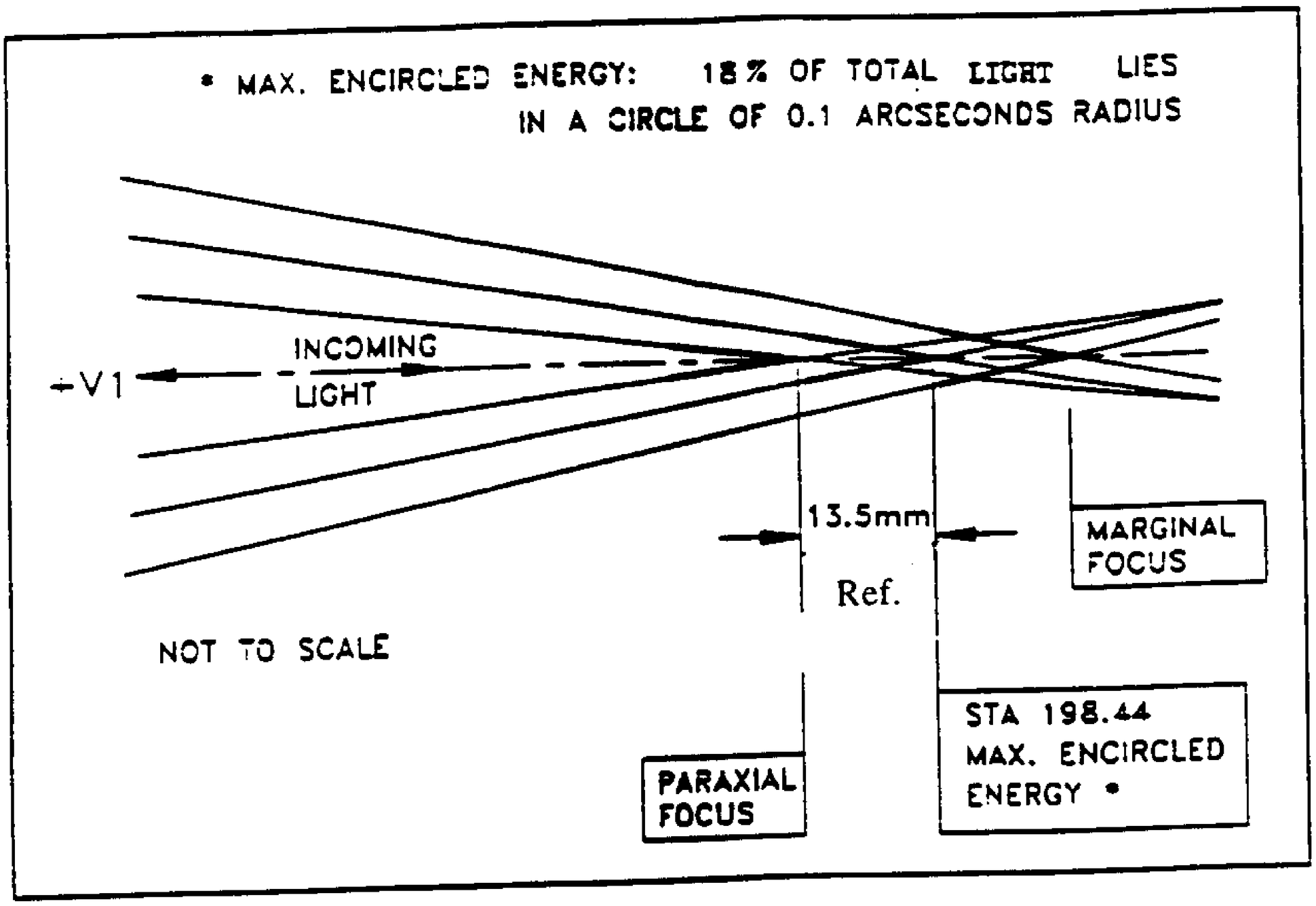

IRN 105

Figure 4.4-1 Position of Paraxial Focus and Maximum Encircled Energy for the As-Built HST

4.4.1 Optical Throughput. The OTA nominal spectral throughput is given in Figures 4.4-2 and 4.4-3. IRN 106, 100, 105

4.4.2 Pupil Properties. The OTA entrance pupil shape is as shown in Figure 4.4-4. There are three mechanical elements which limit the incoming beam as shown in Table 4.4-1. All values in this table are in inches.

Table 4.4-1 OTA Mechanical Element Locations and Uncertainties

Nominal Mech. Element Location	Nominal Image of Mech. Element	On-orbit Mech. Element Position Uncertainty Rel. to Nominal		On-Orbit Mechanical Element Stability Rel. to Nominal	
		Despace (3σ)	Decenter (3σ)	Despace (3σ)	Decenter (3σ)
Aperture Stop - OD 260.98*	474.225*	±.022	±.022	±.002	±.002
SM Baffle - ID 409.25*	476.434*	±.022	±.023	±.002	±.002
Mean Plane of SM Spiders 450.652*	477.057*	±.022	±.023	±.002	±.002

* STATION NUMBERS

4.4.3 Focal Plane Properties. The focal plane scientific data field format is shown in Figure 4.4-5 except for the deviation given in Figure 4.4-6. The field curvature characteristics are found in Figure 4.4-7. The field curvature and astigmatism values are given in Table 4.4-2.

4.4.4 Stray Light. OTA stray light from a full sunlit earth whose limb is no less than 70° from the optical axis shall be no greater than one star of 23rd visual magnitude per arc-second in the f/24 focal plane from all sources. In addition the presence of COSTAR does not degrade the OTA stray light performance. The HST straylight design is shown in Figure 4.4-8. IRN 106

Note that the center of the secondary mirror contains an area of 24 mm in diameter which was figured to be flat and extremely parallel to the back surface of the secondary mirror. A reticle was then etched on that surface to be used in the OTA alignment. The flat was coated with the same coating as the secondary mirror, AL (650 Å)/MgF2(275 Å). For additional information refer to PE drawing 679-1873-005. The flat, which was used in the build and alignment of the OTA on the ground, reflects light sources or reflections in the focal plane area of the OTA. IRN 100, 105

(Supersedes Page 4.4-3 dated 18 March 1994)

IRN 106

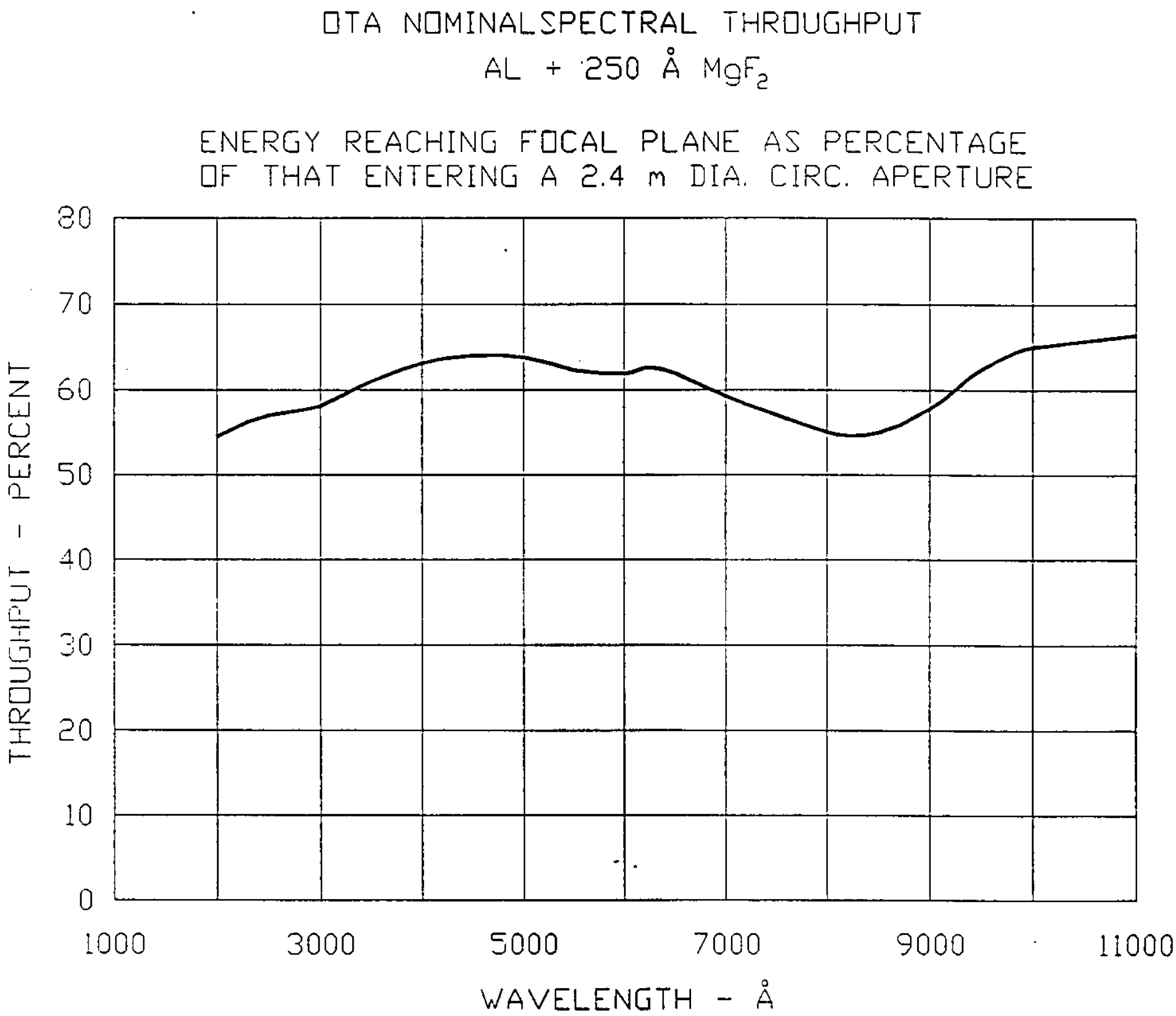

Figure 4.4-2 OTA Nominal Spectral Throughput (2000 - 11000 Å)
(Supersedes Page 4.4-1 dated 29 May 1992)

IRN 106

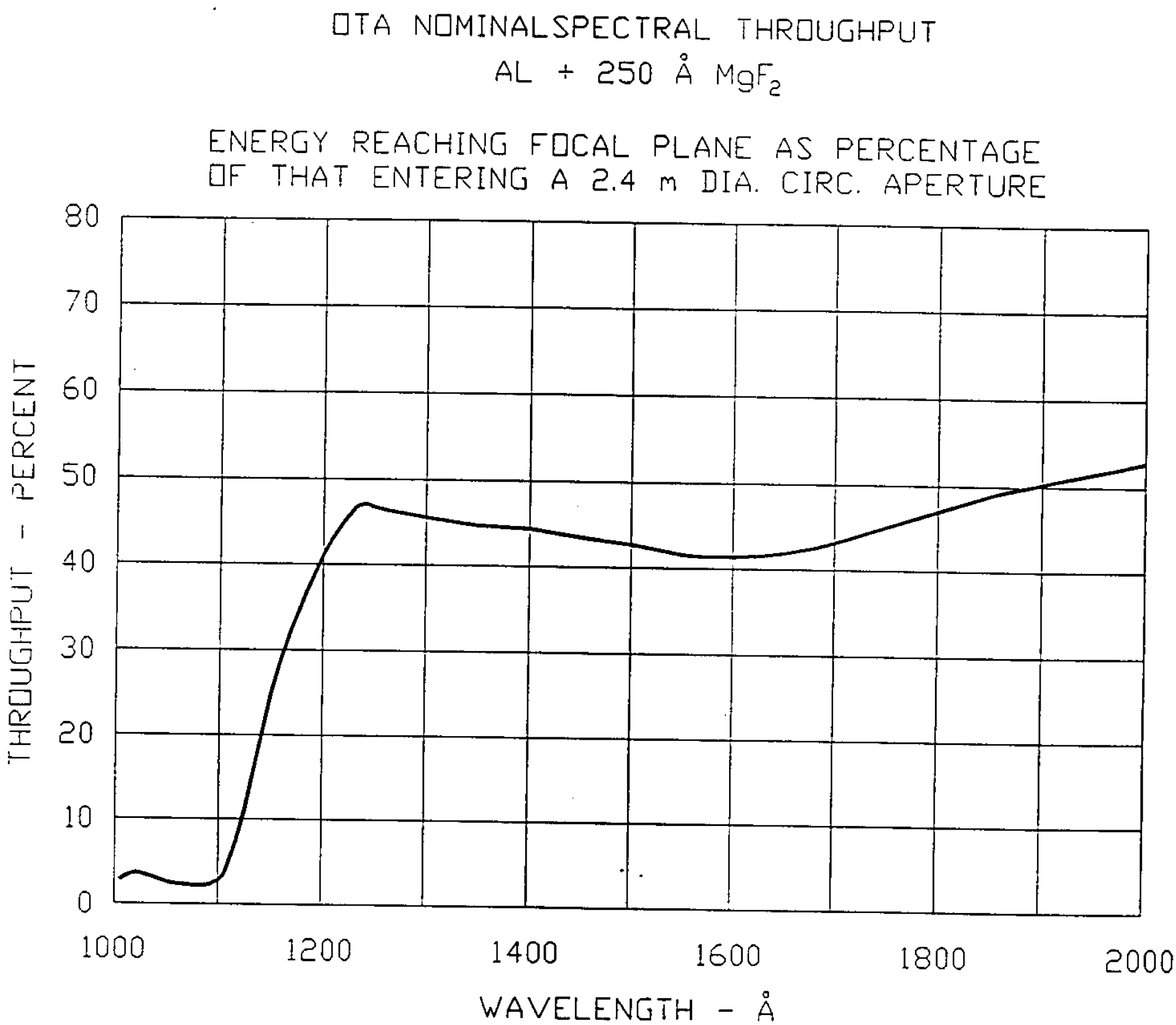

Figure 4.4-3 OTA Nominal Spectral Throughput (1000 - 2000 Å)
(Supersedes Page 4.4-5 dated 29 May 1992)

IRN 071, 105, 106

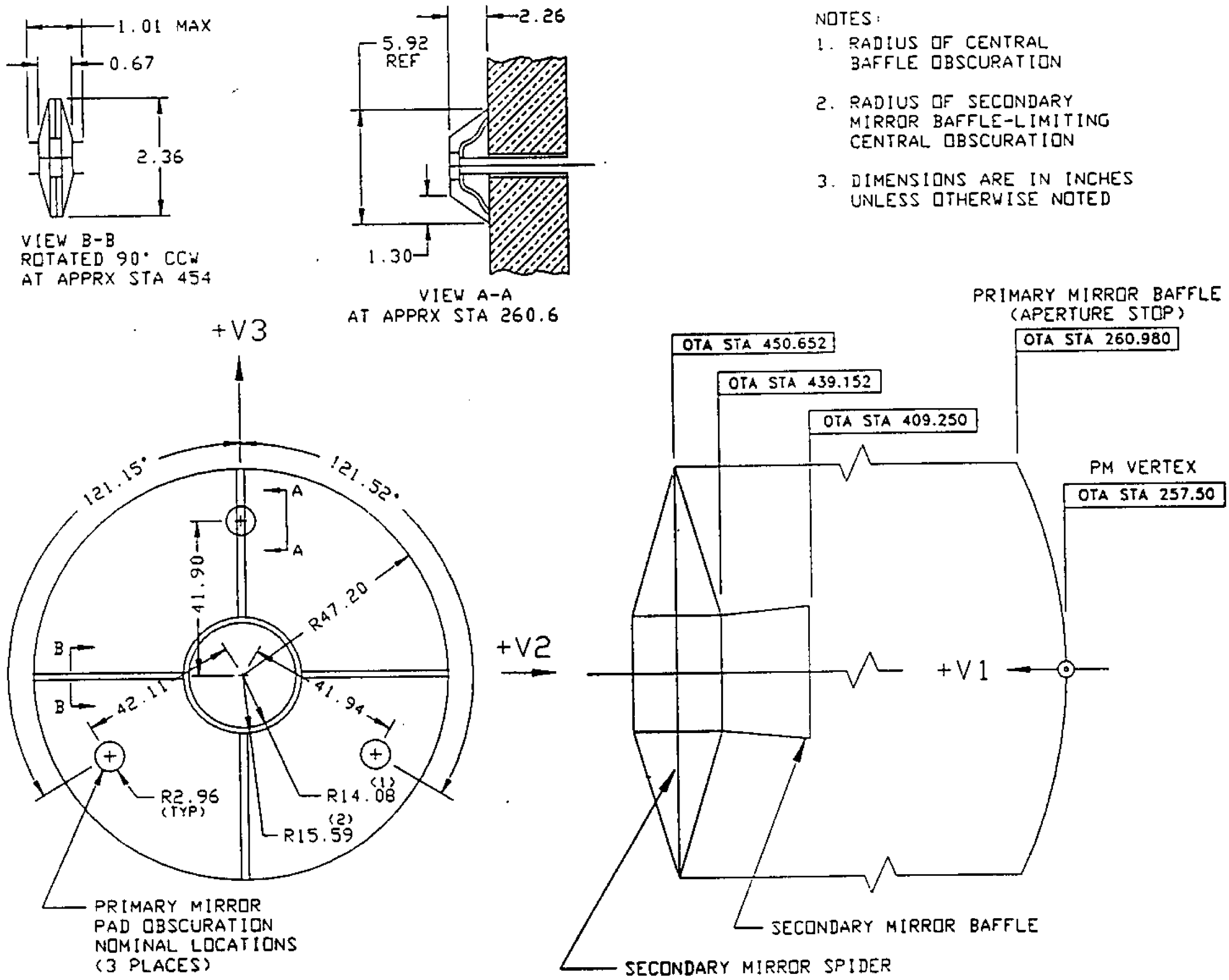

Figure 4.4-4 OTA Entrance Pupil
(Supersedes Page 4.4-6 dated 18 March 1994)

IRN 106

NOTE: THE ACTUAL VIGNETTED AREA IS ±15 mm ALONG +V3 AND ±V2 AND ±20 mm ALONG -V3 WITH A 143.4 mm FLAT ON -V3. HOWEVER, THE INTERCHANGEABILITY REQUIREMENT OF SECTION 4.2.2.1 REQUIRES THAT ALL AREAS BE CONSIDERED AS BEING ±20 mm WITH A 143.4 mm FLAT.

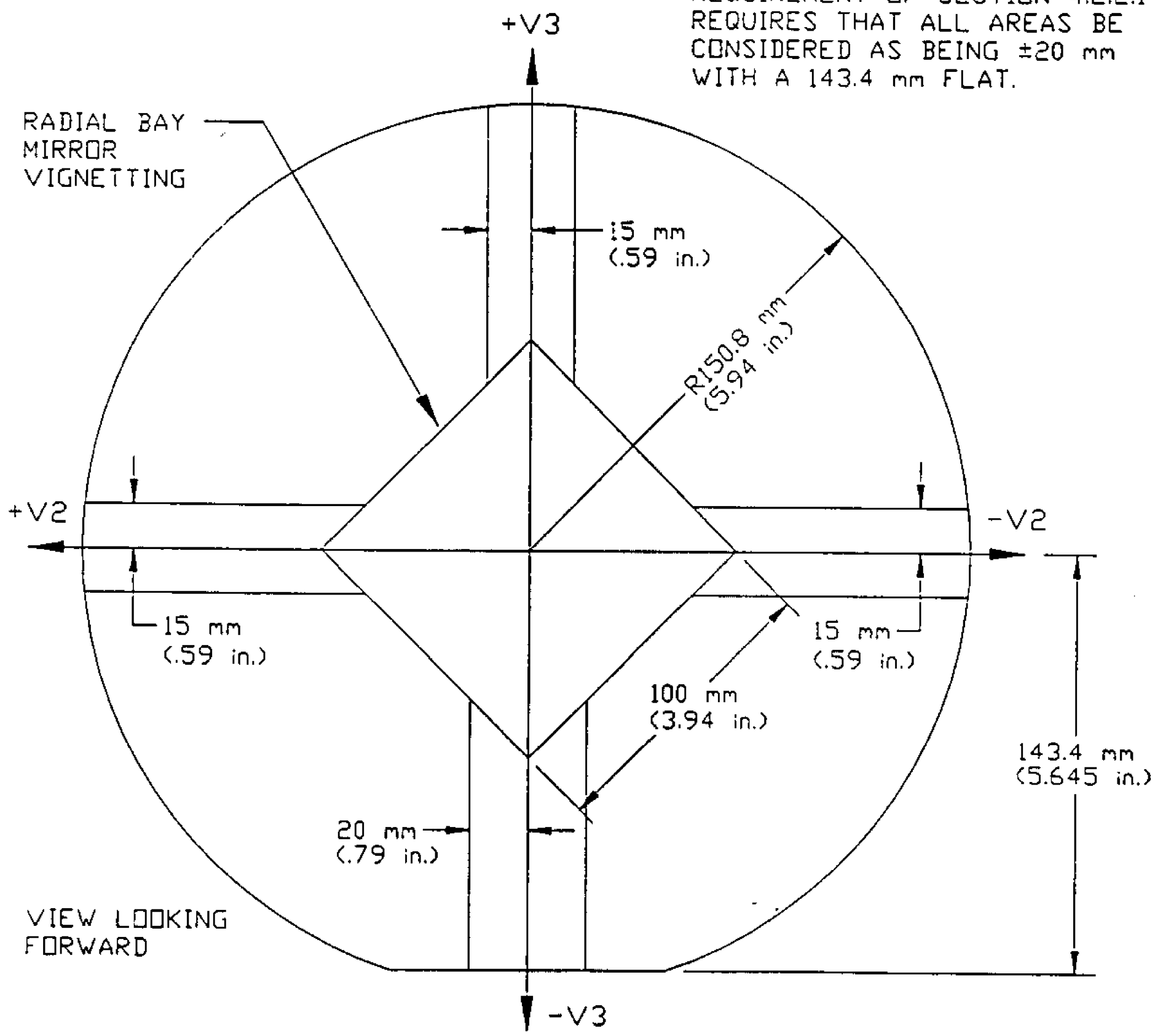

Figure 4.4-5 HST Focal Plane Format
(NEW PAGE CREATED BY IRN 106)

IRN 106

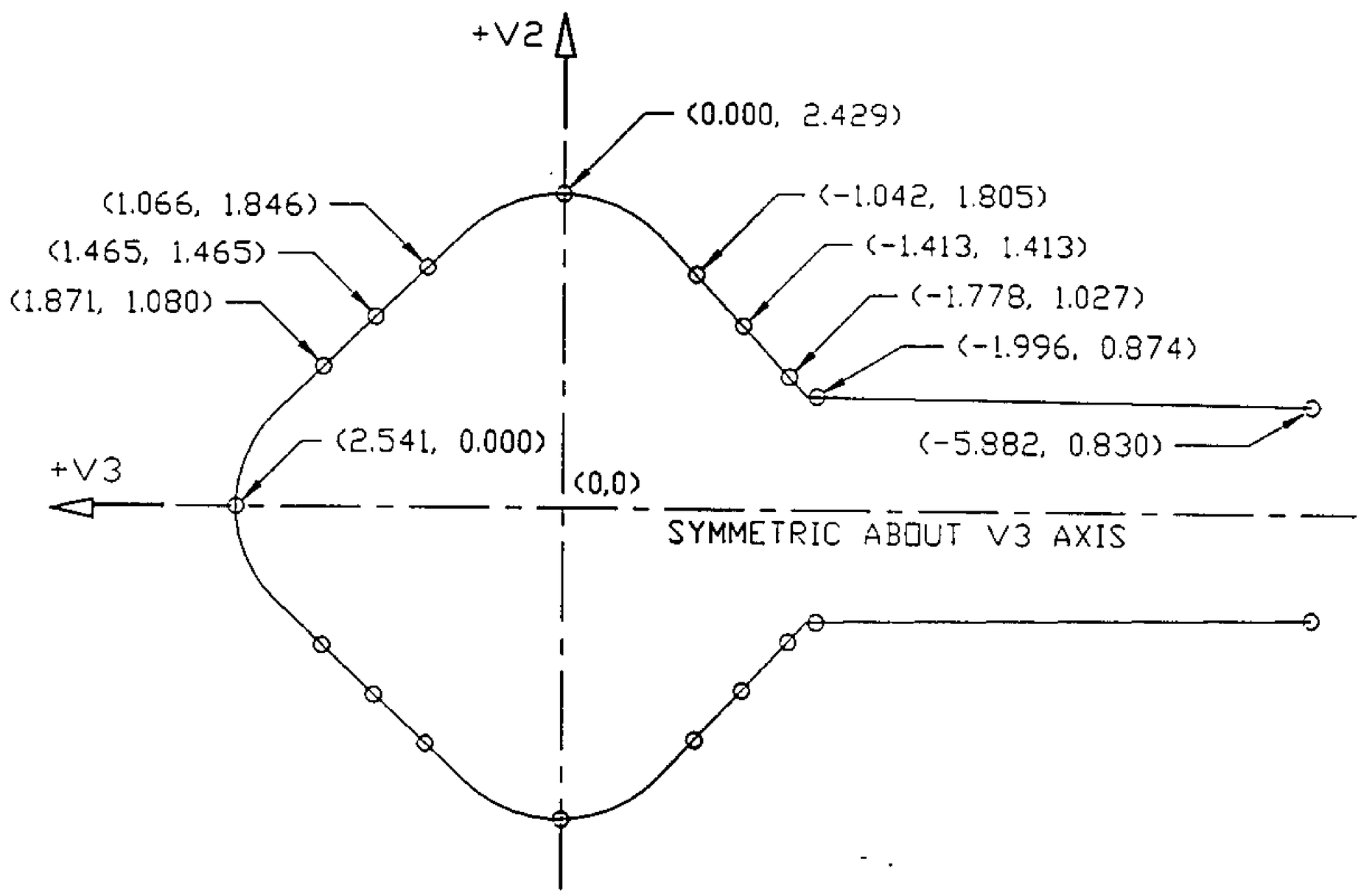

NOTE: ALL DIMENSIONS ARE IN INCHES.

Figure 4.4-6 0% Vignetting of OTA Focal Plane for -V3 Axis
(NEW PAGE CREATED BY IRN 106)

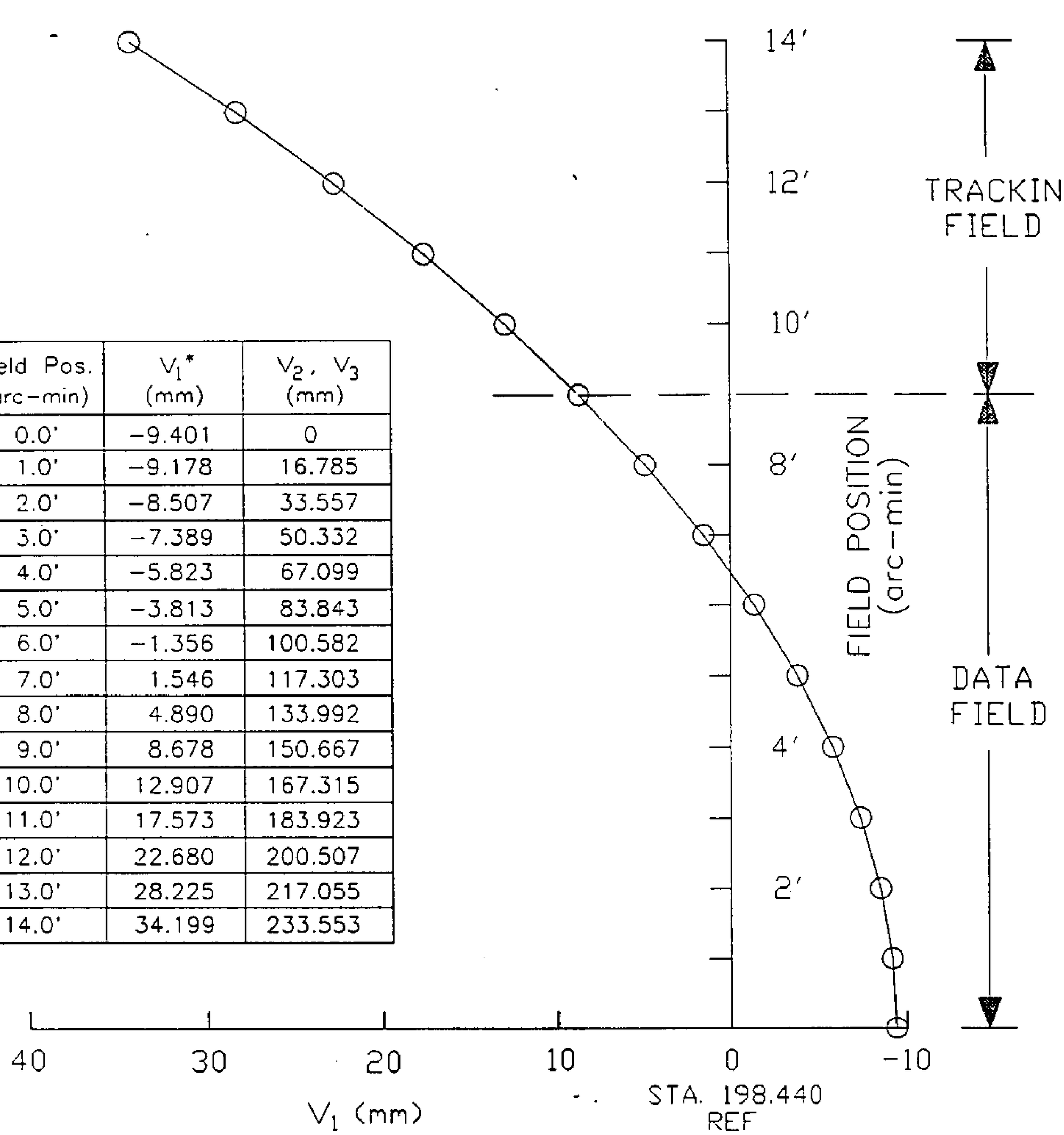

Field Pos. (arc-min)	V_1* (mm)	V_2, V_3 (mm)
0.0'	−9.401	0
1.0'	−9.178	16.785
2.0'	−8.507	33.557
3.0'	−7.389	50.332
4.0'	−5.823	67.099
5.0'	−3.813	83.843
6.0'	−1.356	100.582
7.0'	1.546	117.303
8.0'	4.890	133.992
9.0'	8.678	150.667
10.0'	12.907	167.315
11.0'	17.573	183.923
12.0'	22.680	200.507
13.0'	28.225	217.055
14.0'	34.199	233.553

*: THE V1 VALUES LISTED IN THIS TABLE ARE FOR THE BEST FOCUS OF EACH FIELD POSITION RELATIVE TO STA. 198.44. THE DEFINITION OF BEST FOCUS IS THE V1 LOCATION WHERE THE RMS WAVEFRONT ERROR IS MINIMIZED FOR A RAY BUNDLE WITH A 33% LINEAR CENTRAL OBSCURATION.

IRN 100, 106

Figure 4.4-7 Field Curvature Characteristics
(NEW PAGE CREATED BY IRN 106)

Table 4.4-2 Field Curvature and Astigmatism

IRN 106, 100

Field Position (arc min)	Field Curvature: Delta Focus Location Relative to On-axis Focus (V1 delta - mm)[1]	Astigmatism: (Sagittal Minus Tangential) Nominal Astigmatism (mm)[2]
0.0	0	0
1.0	0.223	0.042
2.0	0.894	0.167
3.0	2.012	0.376
4.0	3.578	0.668
5.0	5.588	1.043
6.0	8.045	1.501
7.0	10.947	2.041
8.0	14.291	2.664
9.0	18.079	3.367
10.0	22.308	4.152
11.0	26.974	5.018
12.0	32.081	5.963
13.0	37.626	6.988
14.0	43.600	8.090

1 The delta V1 values listed in this table are for the best focus of each field position relative to the on-axis location of best focus. The definition of best focus is the V1 location where the rms wavefront error is minimized for a ray bundle with a 33% linear central obscuration.

2 Astigmatism Variation is ±0.08 mm maximum about the nominal.

(NEW PAGE CREATED BY IRN 106)

IRN 105, 106

NOTES:

1. All interior surfaces painted using 3M 401-C10 flat black per Process Spec 679-1029
2. All interior surfaces painted using Chemglaze Z 306 per Process Spec 679-1074
3. Surface finish - Martin black, sides and edges
4. Surface finish - Diffuse black, R_D = 0.03 (3%), R_T = 0.04 (4%)

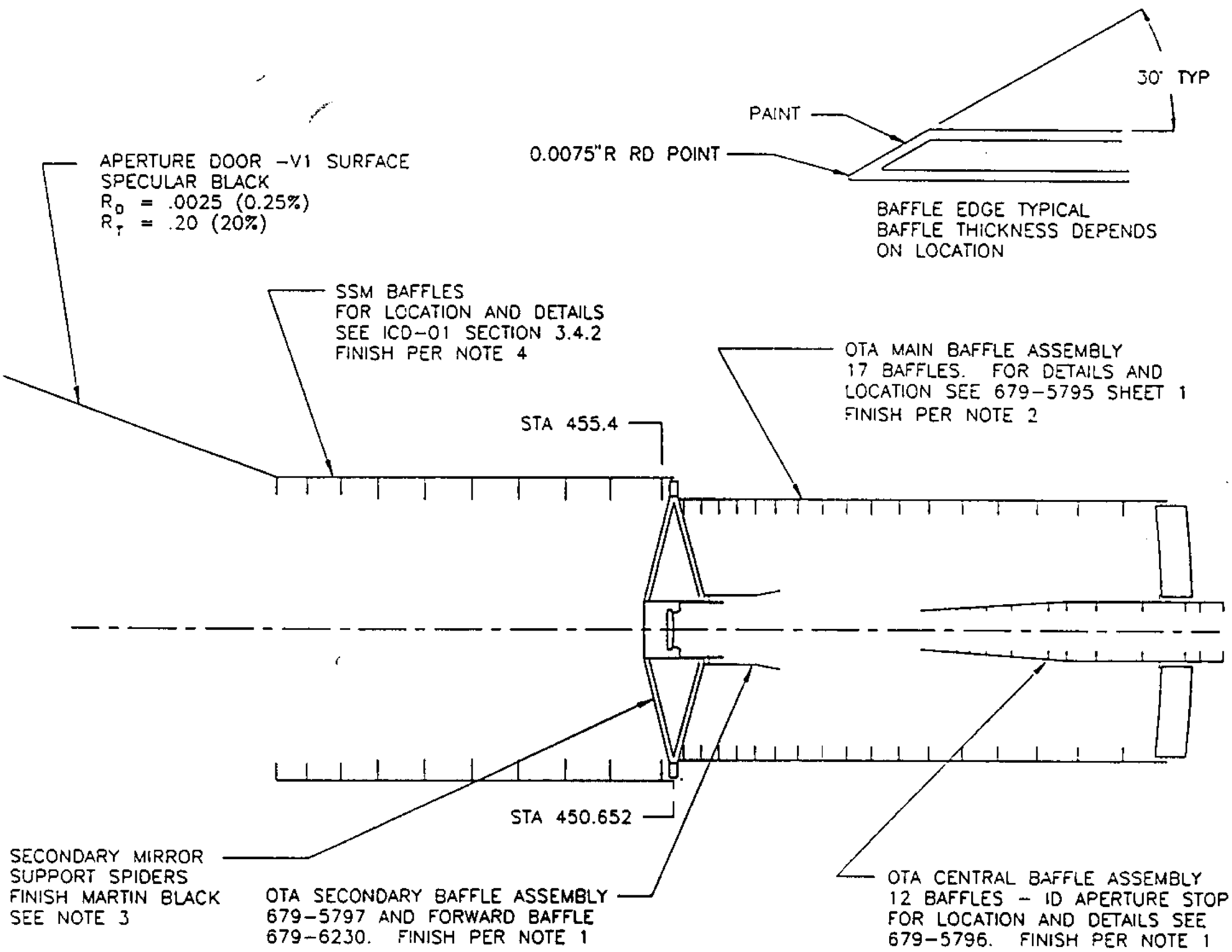

Figure 4.4-8 Space Telescope Straylight Design
(NEW PAGE CREATED BY IRN 106)

4.4.4.1 Aft Shroud Light Leak Environment. The SSM aft shroud structure, with insulation installed, limits internal radiant energy from light leaks (exclusive of that entering the telescope aperture) to 10^{-5} watts/m² measured with an S-20 photocathode (approximately 10^{-3} lumens/m²). This light level applies at the external surfaces of the SIs where they directly face the SSM structure. Each SI shall be an opaque enclosure except for its optical entrance aperture and vent opening(s). IRN 100

4.4.5 Infrared Background (Deleted) IRN 100 105

(New page created by IRN 105)

4.5 Structural Interface.

4.5.1 Loads. SIs shall operate within specifications after exposure to the ground, launch, ascent and landing loads. For a servicing mission the loads environment of the SI are no greater than for initial launch, ascent and landing in the HST. IRN 106

4.5.1.1 Ground Handling Loads. The ground handling limit loads are 2 g's applied at the SI c.g. and act in any direction. IRN 100

4.5.1.2 SI Latching Loads. Each Axial SI shall be designed to withstand a preload compressive force of 800 + 50 lbs. - 0 lbs., applied at point "B" toward point "A". The spring constant of the preload mechanism at point "B" is 330 pounds/inch maximum. Preload variation during any 24 hour period in-orbit is ± 25 lbs. Residual moments before rotation at Point "A" is 23 ft-lbs maximum, and at point "B" is 40 ft-lbs maximum. The maximum moment variation at point "A" for any axial SI due to structural/thermal deformation of a neighboring SI is less than 0.25 ft-lbs in any 24 hour period. The maximum moment variation at point "A" for any axial SI due to structural/thermal deformations of the OTA FPS is less than 0.25 ft-lbs in any 24 period.

4.5.1.3 Ground Transportation Loads. When the SI is installed in the Axial SIPE or in a shipping container, the SI experiences ground transportation loads no greater than those loads given in paragraphs 4.5.1.4 to 4.5.1.7.

4.5.1.4 Liftoff and Landing Overall Load Factors. The SI liftoff and landing limit load factors for the SIs are given in Table 4.5-1. These load factors act through the c.g. They must be multiplied by appropriate design safety factors per GEVS-SE. IRN 106

(Supersedes Page 4.5-1 dated 29 May 1992)

TABLE 4.5-1
LOAD FACTORS (g's) AXIAL SCIENTIFIC INSTRUMENTS

IRN 100

Loading Condition	V1	V2	V3	Notes
Liftoff	±4.8	±1.35	±3.21	1, 2
Landing	±1.5	±0.83	±2.59	1, 2
Emergency Landing	-4.5 +1.5	±1.5	-4.5 +2.0	3, 4, 5

IRN 106

Notes:

IRN 100

1. Factors are for limit loads and should be multiplied by a factor of safety to obtain ultimate loads.
2. Factors V1, V2, V3 act simultaneously.
3. All load factors are ultimate.
4. Loads are directed aftward, V_1, within a 20 deg. half cone angle.
5. The load factors operate separately in each direction.

4.5.1.5 Emergency Landing Overall Load Factors. The SI shall survive the emergency loads given in Table 4.5-1. These loads act through the SI c.g.

4.5.1.6 Random Mechanical Vibration Random mechanical vibration levels at the registration interface (mount points A, B, & C) are given in Figure 4.5-1 and apply only to components directly coupled to these points.

4.5.1.7 Acoustic Loads. The acoustic during launch are given in Figure 4.5-2.

4.5.1.8 In Orbit Loads. For general in-orbit maintenance operations, the following loads and conditions apply.

4.5.1.8.1 Maximum EV Crewmember Applied Loads on Handholds & Equipment Tethers. All SI handhold & equipment tether mounting surfaces shall be designed to withstand an imposed load of 300 lbs ultimate in any direction simultaneously with an applied moment of 75 ft-lbs about any axis at the handhold mounting pad interface.

4.5.1.8.2 SI Guiderail Loads. During SI in-orbit changeout the guide blocks and guide strips attached to the SI can be subjected to a crewmember imposed load of 100 pounds (limit).

4.5.1.8.3 Connector Loads. The maximum load applied to the connector interface is 300 lbs ultimate in any direction with a combined torque of 50 in-lbs in the plane of the connector plate.

(Supersedes Page 4.5-2 dated 29 May 1992)

IRN 100

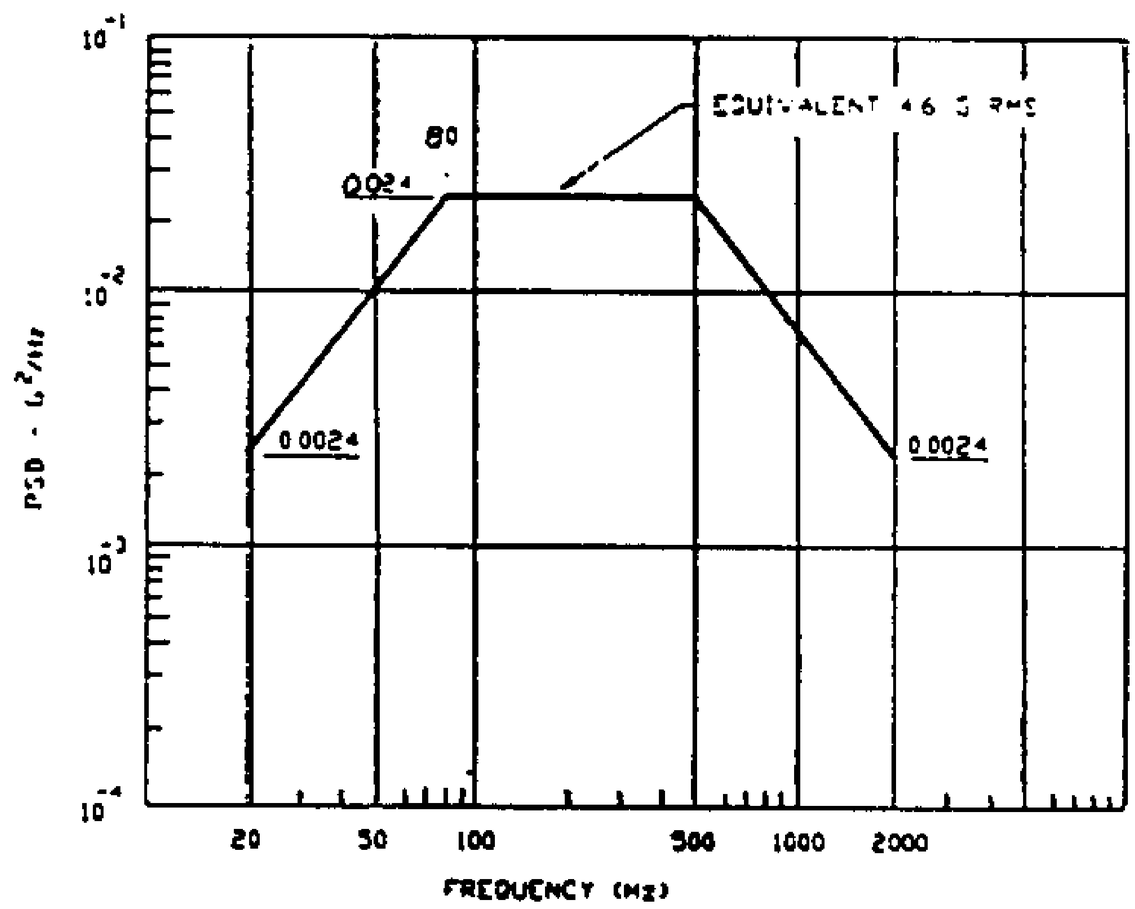

Figure 4.5-1 Mechanical Random Vibration at SIPE/SI Interface

IRN 106

IRN 100

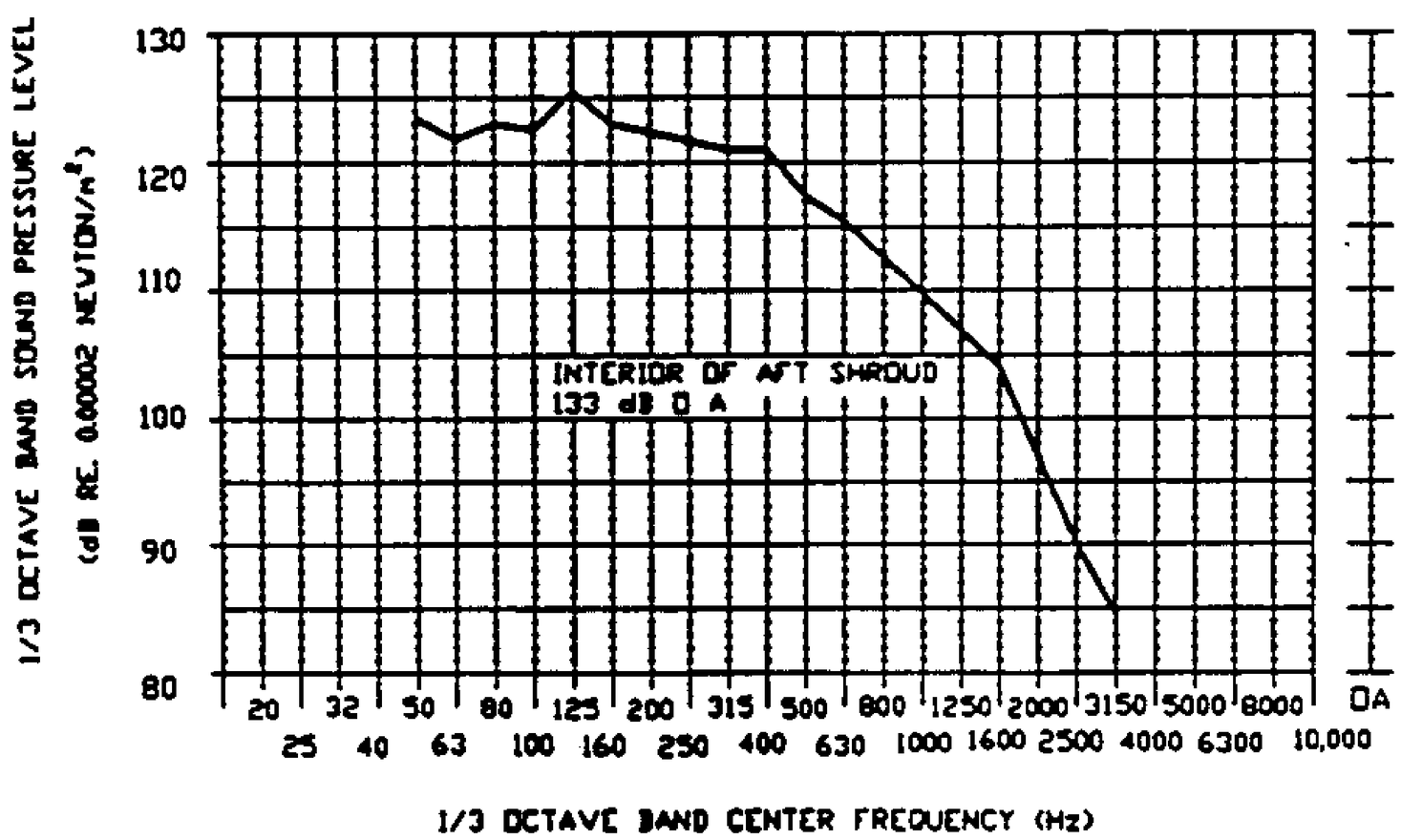

Figure 4.5-2 Axial SI Acoustic Levels During Ascent

IRN 106

(Supersedes Page 4.5-3 dated 29 May 1992)

4.5.2 Structural Characteristics. Axial stiffness (in P1 direction) of the SI structure between support points "A" and "B" shall not be less than 75000 lbs/in. The optical bench and exostructure lateral stiffness shall be such that the generalized mass of the first two lateral modes taken individually fall below the e curve of 4.5-3. Generalized mass is defined as follows: IRN 100

$$\overline{M} = \{\phi\}^T[M]\{\phi\}, \text{ where } \phi_{imax} = 1$$

$\{\phi\}$ = eigenvector of a given mode
$[M]$ = mass matrix of a discretized structural model
T = Superscript indicates a transposed matrix

Where the first mode is predominantly torsion (coupled in the two lateral directions) the generalized mass is defined as follows:

$$\overline{M} = \sum_i M_i \left(\phi_{iP2} + \phi_{iP3}\right)$$

Where ϕ_{iP2} and ϕ_{iP3} are the eigenvectors of the ith mass point for the nth mode (in this case the first mode) in the P2 and P3 directions. The requirements of Figure 4.5-3 apply.

Vibration modes are calculated neglecting flexibility in the latching mechanisms. When all SIs are installed in the HST, the combined OTA/SI first mode is 18 Hz. An SI shall not have any mechanism operating element that will excite this 18 Hz mode. IRN 106

4.5.2.1 SI/OTA Latch Flexibility. The nominal stiffness characteristics that include both sides of the OTA contractor supplied latches at Points "A", "B", and "C" are as follows: IRN 100

Mount Point "A"
V1 = 245,000 lbs/in tension, V1 - 245,000 lbs/in compression
V2 = 223,000 lbs/in
V3 - 117,000 lbs/in

Mount Point "B"
V1 = Preload
V2 = 114,000 lbs/in
V3 = 66,000 lbs/in

Mount Point "C"
45° bisector to V2 and V3
Flexure = 8000 lb/in (preload 30 lbs)
Fitting = 158,000 lbs/in

(Supersedes Page 4.5-4 dated 29 May 1992)

ST-ICD-02E
27 FEBRUARY 1985
IRN 100
29 MAY 1992

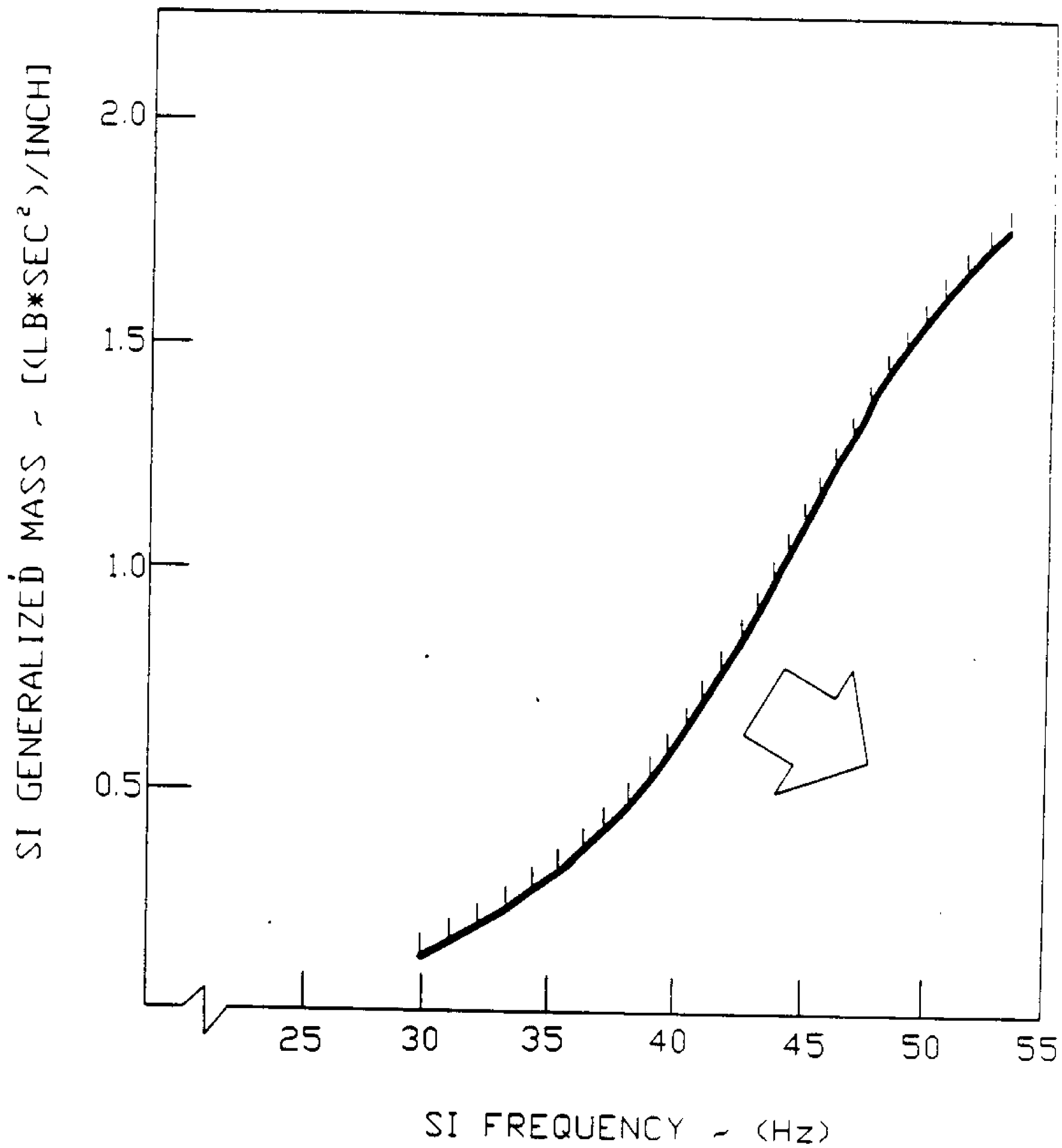

IRN 100

Figure 4.5-3 SI Generalized Mass Vs SI Mode Frequency

(NEW PAGE CREATED BY IRN 100)

4.5.3 Mass Properties

4.5.3.1 Weight. The maximum weight of a single axial SI, not including the GFE listed below, is normally 700 lbs.(318 Kg) with an allowable center of gravity range defined by the coordinates: IRN 100

P1 = -20 to -50 inches
P2 = 12 ± 5 inches
P3 = 12 ± 5 inches

However, since the maximum weight of an SI is actually limited by the allowable latch loads, which are dependent on the c.g. position, the maximum weight of an SI, not including the GFE, may be increased to 760 lbs. (345 kg) if the center of gravity is held within the following range:

P1 = -20 to -50 inches
P2 = 12 ± 1 inches
P3 = 12 ± 1 inches

If the center of gravity of the SI is not covered by either of the above cases then the following procedure shall be used to determine the maximum weight.

Using the larger absolute magnitude of the deviation of the P_2 or P_3 value from the nominal 12 inch location as a parameter, $|P|$, a linear interpolation shall be made to determine the maximum weight of the SI.

$|P|$ can be stated mathematically as:

Let: $\Delta P_3 = |P_3 - 12|$
and: $\Delta P_2 = |P_2 - 12|$

If: $\Delta P_3 \geq \Delta P_2$ Then $|P| = \Delta P_3$
Else $|P| = \Delta P_2$

As a design aid, the maximum weight of an SI is plotted as a function of $|P|$ in Figure 4.5-4.

(NEW PAGE CREATED BY IRN 100)

The weight of each SI shall be measured to within ± 5 lbs. prior to installation into HST The weight of GFE supplied hardware items which are not included within the SI weight budget but which must be accounted for in the SI mass properties reporting are:

Connectors 6 @ .12 lbs.	0.7 lbs.
Ground Strap & Attachment Fitting	0.5 lbs.
Guide Strips & Guide Blocks	3.0 lbs.
Forward registration fitting	5.7 lbs.
Rear registration fitting	5.7 lbs.
Tangential registration fitting	3.0 lbs.
Handles, each	2.0 lbs.
Purge Fitting	0.2 lbs.
Axial SI Handles	12 lbs.
ASCS Interface Plate for bay 3 SI	17.7 (TBR) lbs.
ASCS Interface Plate for bay 4 SI	TBD lbs.
Heatpipe Interface Plate for bay 1 SI	TBD lbs.

IRN 106

IRN 117

4.5.3.2 Center of Gravity. Each axial SI c.g. shall be within the volume defined by the coordinates: IRN 100

P1 = -20 to -50 inches
P2 = 12 ± 5 inches
P3 = 12 ± 5 inches

The location of the c.g. for each SI shall be determined and marked on the +P2 and +P3 surfaces to within ± 0 25 inches of true location prior to installation within HST. The c.g. marking is "⊕ CG" with block letters 1" high and a 1" diameter symbol.

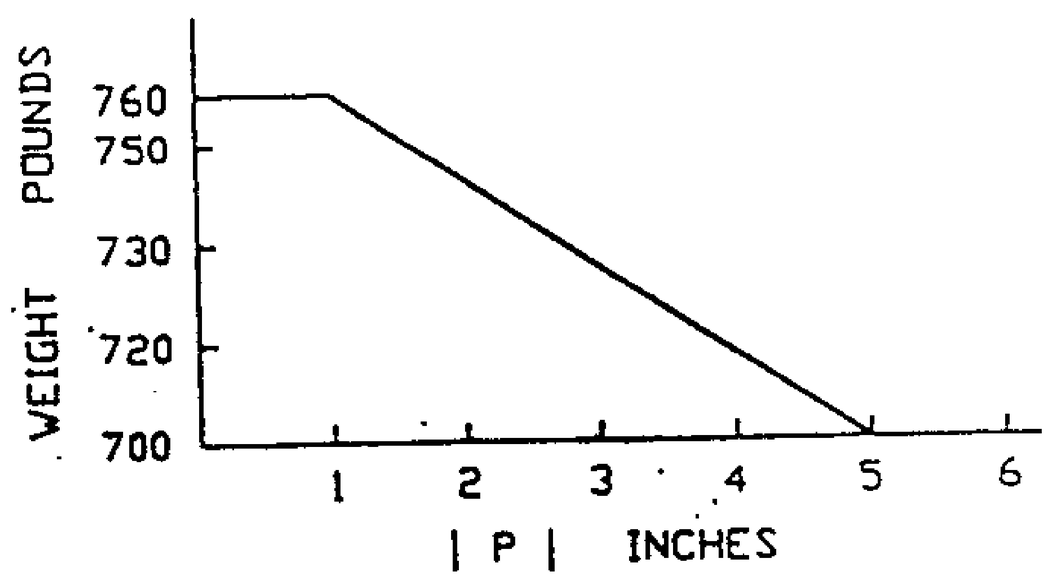

Figure 4.5-4 Maximum Allowable SI Weight vs CG Position

The location of the c.g. for each SI shall be determined and marked on the +P2 and +P3 surfaces within ±0.25 inches of true location prior to installation in the Axial SIPE. The c.g. marking shall be "⊕CG" with a 1" diameter symbol and 1" high block letters. IRN 106

4.6 Environmental Interface. The SI environmental conditions of thermal, contamination, magnetics, SSM internal pressure, ionized particle radiation, meteoroid and humidity are specified below.

4.6.1 Thermal Interfaces

IRN 100

4.6.1.1 Operational Thermal Interface. The thermal environment for in-orbit HST science mission operation is controlled by a balance between the heat generated by the combined OTA/SSM and SIs, and the heat radiated to space by the SSM aft shroud. Thermal radiation is permitted from the SIs in either or both ± V2 and ± V3 directions from the SI +P2 and/or +P3 faces within the limits discussed in paragraph 4.6.1.1.3.1 below.

4.6.1.1.1 Mount Point Conductance. At each of the three attachment points (A, B, C in Figure 4.3-1) the following conditions are maintained during science orbital operations:

a. The temperature at the OTA side of each attachment fitting is within the range 21°C ± 1°C.

b. The maximum effective thermal conductance of each attachment fitting provided by the OTA is as follows:

Point A Fitting:	0.050 W/°C
Point B Fitting:	0.080 W/°C
Point C Fitting:	0.050 W/°C

Figure 4.6-1a shows how this interface should be represented in the thermal model.

c. The temperature of the SI surface to which each OTA attachment fitting is mounted, shall be maintained within the range -20°C to +20°C and the variation during a single exposure (or 24 hours, which ever is less) shall be a maximum of 4°C. The 4°C limit applies to the operating SI and only if the operating SI requires full OTA focus and image stability compliance.

(NEW PAGE CREATED BY IRN 100)

IRN 100

4.6.1.1.2 Electrical Cable, Ground Strap, Vent Line and Purge Line Conductances. Cable effective conductances (K) are less than or equal to 0.1 watt/°C.

Ground strap effective conductances (K) are less than or equal to 0.1 watt/°C.

Vent line conductance (K) shall be determined by the SI needing the vent line.

The purge line effective conductance, if connected, is equal to or less than 0.01 W/°C.

These conductors represent the heat path between the SI and Aft Shroud environment. Figure 4.6-1b shows how these interfaces should be represented in a thermal model of the SI.

(NEW PAGE CREATED BY IRN 100)

IRN 100

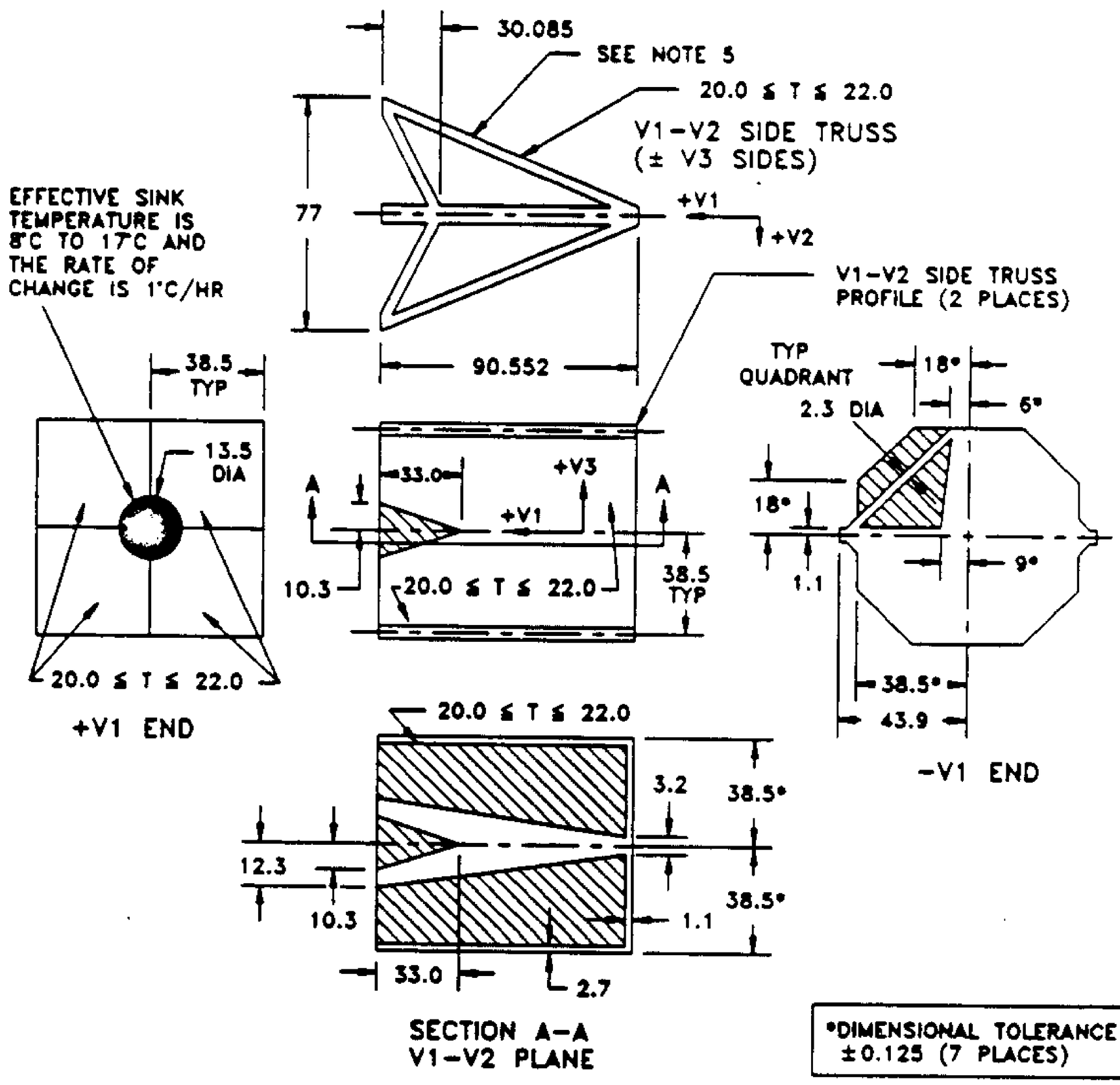

NOTES:
1. SHADED AREAS ARE PASSIVE THERMAL BARRIERS
2. TEMPERATURES ARE IN °C
3. ALL DIMENSIONS INCLUDE MLI ENVELOPE
4. SURFACE FINISH UNLESS NOTED
   - $\varepsilon = 0.85$
   - $\varepsilon^* = 0.015$
5. ALL TRUSS MEMBERS 7.00 MAX DIAMETER INCLUDING MLI

Figure 4.6-1 OTA FPS Thermal Configuration

(NEW PAGE CREATED BY IRN 100)

4.6.1.1.3 Radiative Heat Transfer

4.6.1.1.3.1 Obscurations and Surface Characteristics. The FPS thermal barrier and FPS obscurations and surface characteristics are shown in Figure 4.6-1. IRN 100

The ± V3 direction view of the SI enclosure to the SSM wall is obscured by the FPS, and the -V3 direction view is obscured by the equipment shelf containing FHSTs and RSUs, which are included in the effective sink temperatures. However, critical radiating surfaces of the SIs should be placed so as to avoid being obscured by these components. Some features of the obscuring structures can be found in the Aft Shroud Metrology Book.

Figures 4.6-1c, d, e, and f show how the FPS thermal barrier should be represented in the thermal math model.

The SIs exterior structure temperature and surface property requirements during HST science mission operations are shown in Figure 4.6-2.

4.6.1.1.3.2 Effective Sink Temperatures. The radiative heat transfer environment in the SSM aft shroud compartment is defined in terms of "effective sink temperatures". This temperature represents all thermal contributions including the -V3 equipment shelf, as a single parameter. The effective sink temperature (T_{sink}) for a given SI radiator should be used as follows:

- The view factor between the SI external node and the effective sink is 1.0.
- The radiative conductor between the SI node and the (T_{sink}) is the product of the node area and its emittance. The emittance of the effective sink node is 1.0.
- The SI node coupled to an effective sink should not be radiatively coupled to any other external node.

The effective sink temperature ranges for an axial SI in the Operational and Hold modes are defined in Figure 4.6-3. The values shown in Figure 4.6-3 represent the orbital average effective sink temperatures averaged for all the nodes on the particular SI surface.

(NEW PAGE CREATED BY IRN 100)

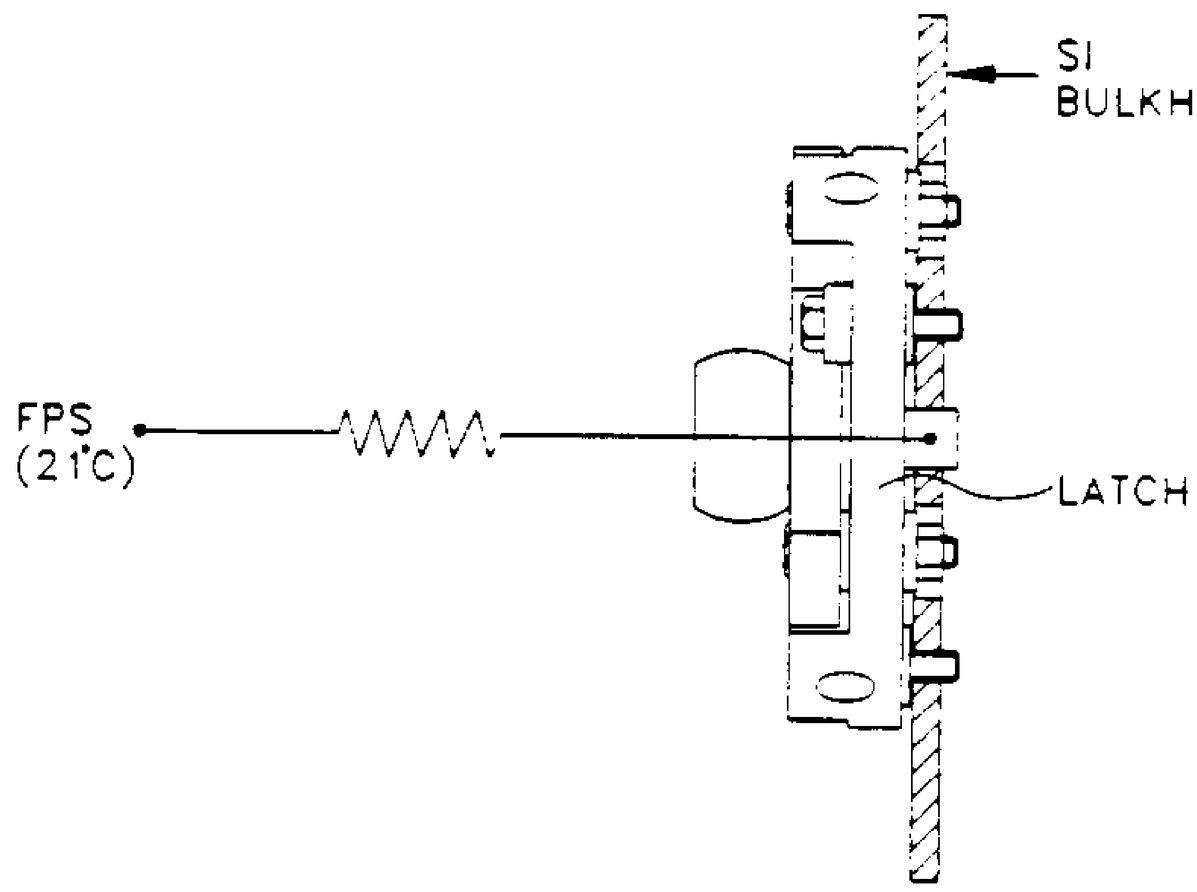

Figure 4.6-1a Mount Point Interfaces

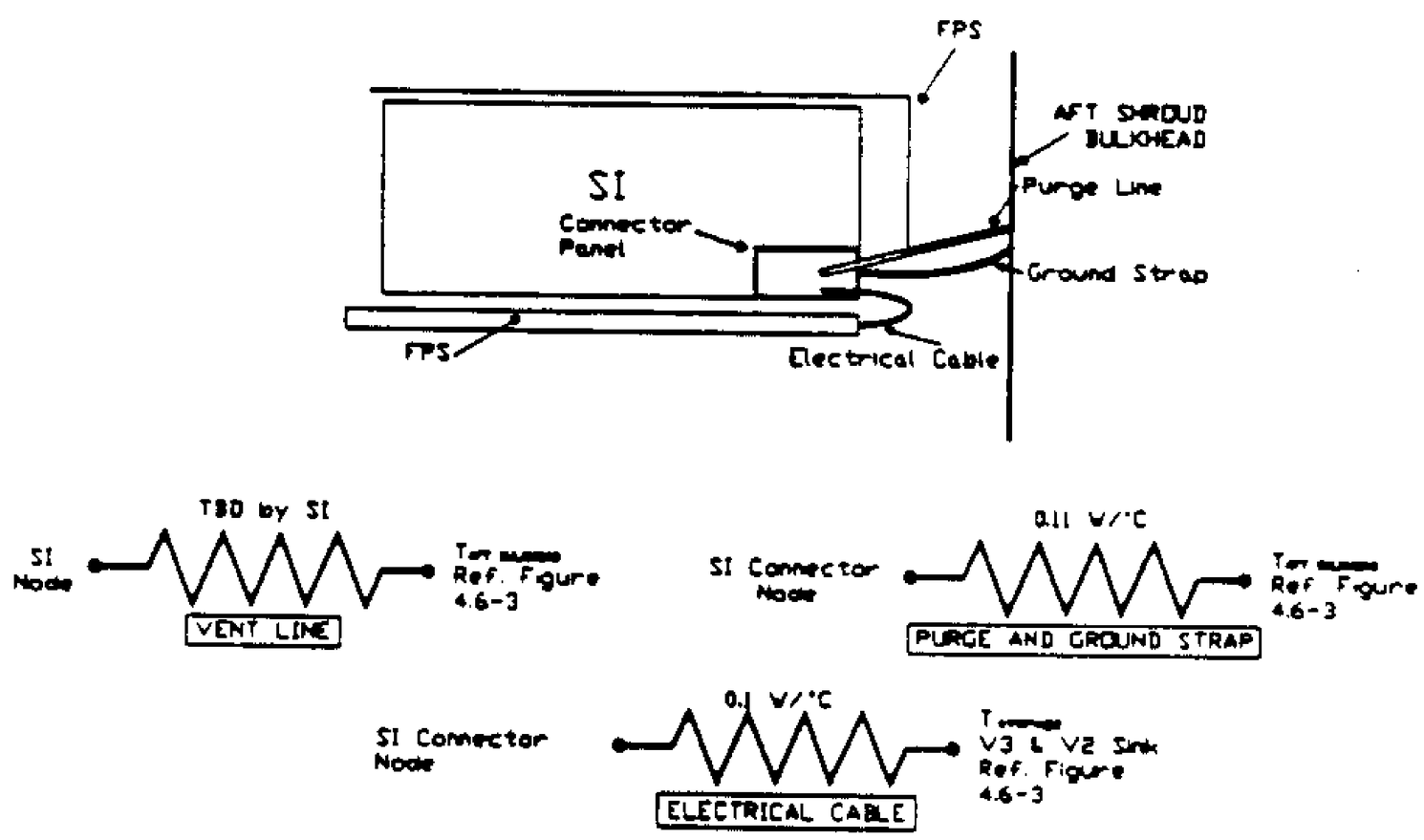

Figure 4.6-1b Ground Strap, Vent Line And Electrical Cable Interface

(NEW PAGE CREATED BY IRN 100)

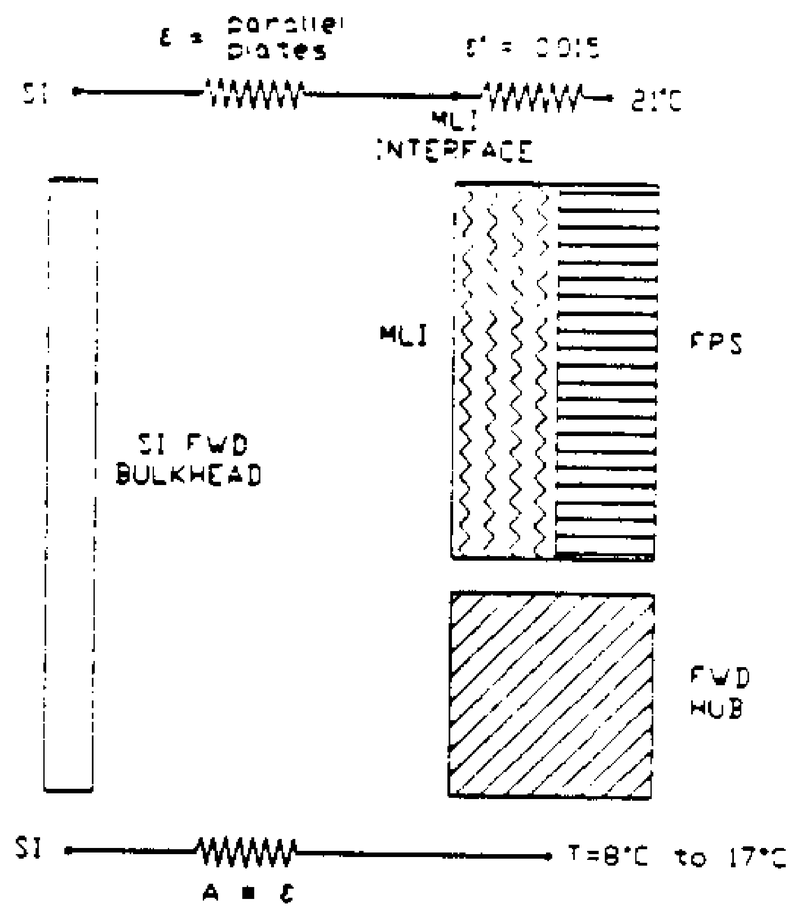

Figure 4.6-1c Forward Bulkhead Interface

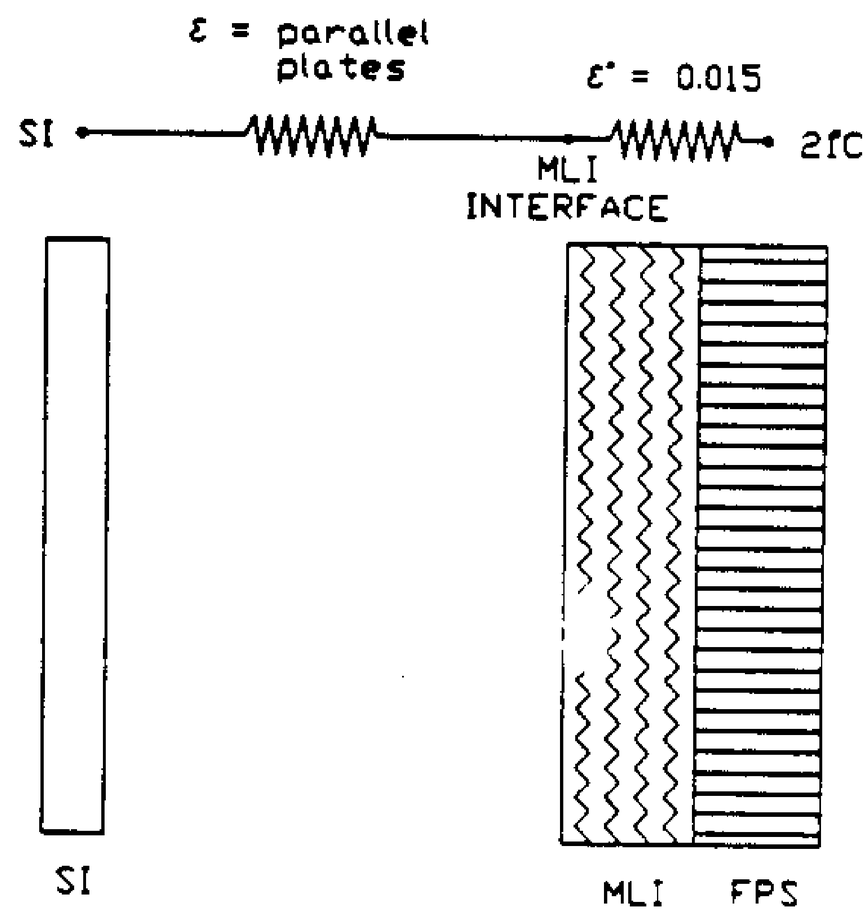

Figure 4.6-1d Controlled Barrier Interface

IRN 100

(NEW PAGE CREATED BY IRN 100)

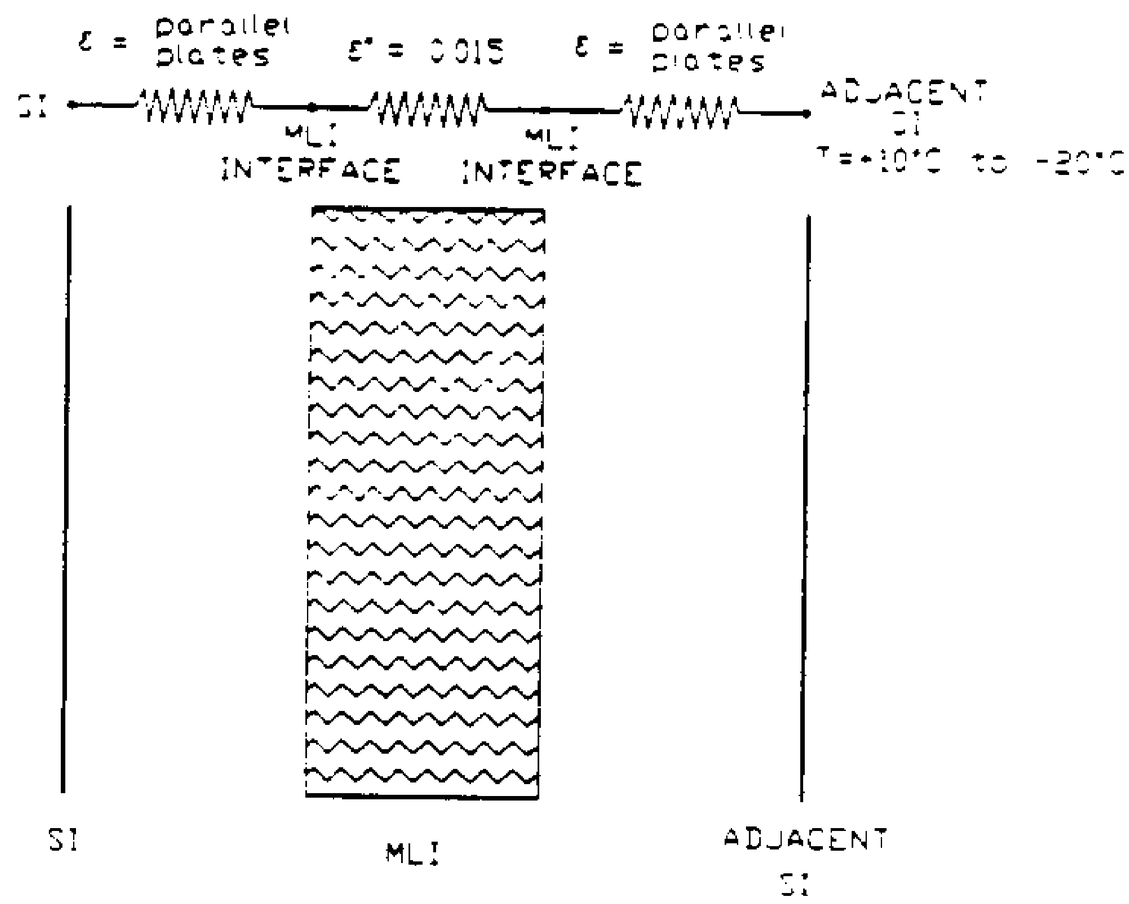

Figure 4.6-1e Uncontrolled Barrier Interface

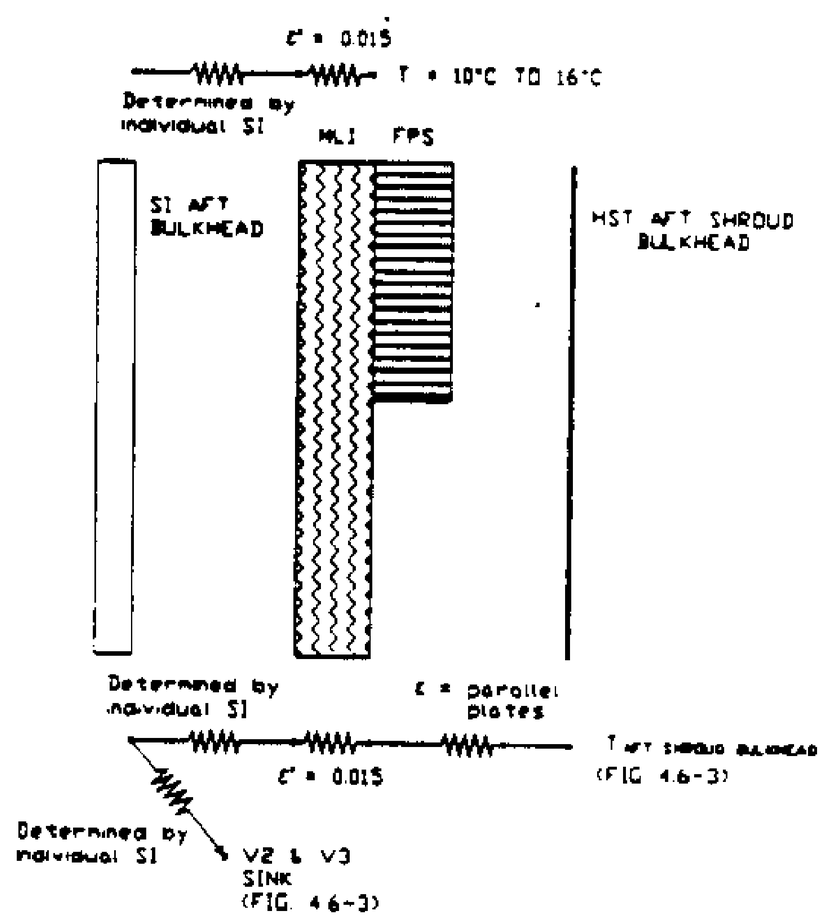

Figure 4.6-1f Aft Bulkhead Interface

(NEW PAGE CREATED BY IRN 100)

IRN 100

IRN 106, 100

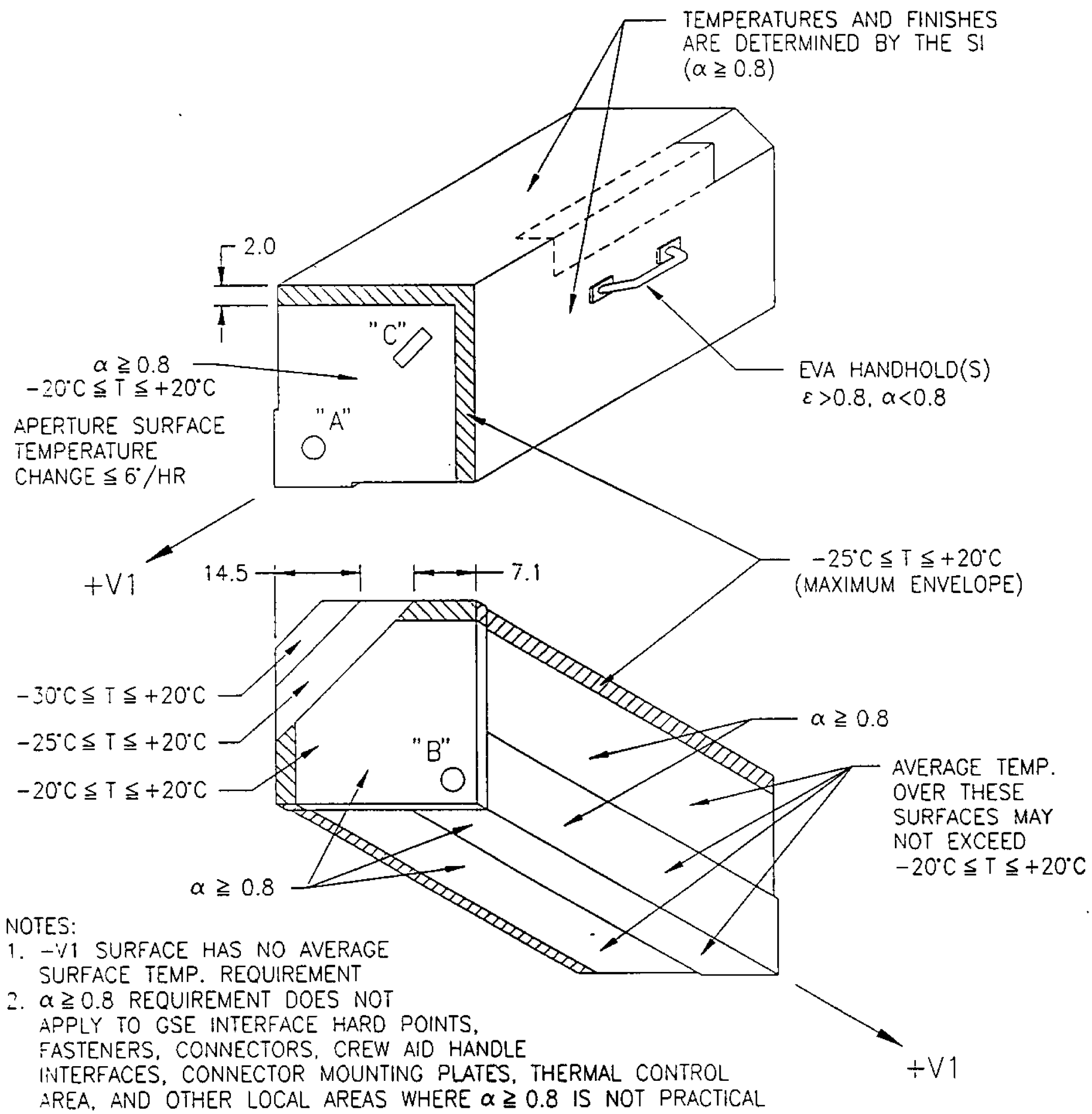

NOTES:
1. −V1 SURFACE HAS NO AVERAGE SURFACE TEMP. REQUIREMENT
2. α ≧ 0.8 REQUIREMENT DOES NOT APPLY TO GSE INTERFACE HARD POINTS, FASTENERS, CONNECTORS, CREW AID HANDLE INTERFACES, CONNECTOR MOUNTING PLATES, THERMAL CONTROL AREA, AND OTHER LOCAL AREAS WHERE α ≧ 0.8 IS NOT PRACTICAL

Figure 4.6-2 ORI Exterior Surface Temperature and Properties
(Supersedes Page 4.6-8 dated 29 May 1992)

The operational effective sink temperatures shown in Figure 4.6-3 (1 and 2) define the radiative environment for an SI which complies with the Operational Power constraints specified in section 4.6.1.1.4. IRN 100

The Hold temperatures in Figure 4.6-3 represent the cold case temperatures for these power modes. For a constant power dissipation from each SI (constant in time and distribution) the orbital fluctuation in the effective sink temperatures is less than ± 8°C. For time varying power dissipations up to the maximum SI power levels defined in section 4.6.1.1.4 (20% over orbital average, 50% duty cycle) the orbital fluctuation in the effective sink temperatures is less than ± 12°C.

The effective sink temperatures in Figure 4.6-3 (1, 2 and 3) are averaged over the entire SI surface. Sink temperature for individual nodes on the same SI surface will vary by no more than the values shown in Figure 4.6-3 (4 and 5). The sink temperatures increase in the forward (+V1) direction. The maximum difference in the effective sink temperatures, as seen by any two nodes anywhere on the SI surfaces, is less than or equal to 20 °C with the ± V3 axes' sink temperatures warmer than the ± V2 axes' sink temperatures.

	$\pm V_3$	$\pm V_2$	AFT BULKHEAD
1. HOT OPERATION	-11	-18	-10
2. COLD OPERATION	-28	-38	-30
3. COLD HOLD	-28	-38	-30
4. HOT OPERATION GRADIENTS	± 3	± 2	N/A
5. COLD OPERATION AND HOLD GRADIENTS	± 5	± 3	N/A
6. CRYOGENIC DEWAR DESIGN LIFE	-11	-20	-13

ALL TEMPERATURES ARE AVERAGED OVER THE ENTIRE SURFACE, AND AVERAGED OVER THE ORBIT.

GRADIENTS ARE OVER THE ENTIRE SURFACE.

Figure 4.6-3 Effective Sink Temperature (°C) Distribution-Non Applicable to FOC

(NEW PAGE CREATED BY IRN 100)

Effective sink temperatures in Figure 4.6-3 (6) are provided for the evaluation of cryogenic dewar life. IRN 100

4.6.1.1.4 Thermal Power. The SIs have two different power modes during HST Science Mission Operations.

4.6.1.1.4.1 Thermal Power Mode Definitions. The SI power modes are defined as follows:

Power Mode	Thermal Definitions
Operational	SI components within operating temperature limits and preserve interface temperature
Hold	SI components achieve operational mode in less than 2 orbits and preserve interface temperatures.

4.6.1.1.4.2 Thermal Power Mode Constraints. The SI power constraints for each of these modes are as follows:

Power Mode	Constraints
Operational	Not to exceed 150 watts/SI average power per orbit including RM (RIU) 174 watts/SI maximum sustained power including RM (But not to exceed 150 Watts avg/orbit)
Hold	Not to exceed 58 watts/SI average power per orbit including RM

The transition from hold mode to operational mode has operational power constraints. These thermal constraints on SI power are in addition to the electrical constraints of Section 4.7.

4.6.1.1.4.3 Normal Science Mission Thermal Power Configuration. The aft shroud compartment radiative heat transfer interface, as defined in Section 4.6.1.1.3, is based on a normal science mission configuration for the SIs which consists of:

One axial SI at operational power
Three axial SIs at hold power
One radial SI at operational power
Three FGSs operating
Three FHSTs operating
Four of the six gyro channels operating

(NEW PAGE CREATED BY IRN 100)

However, this does not specifically prohibit operations that include having the radial SI and more than one axial SI at operate power simultaneously, as long as all equipment within the aft shroud remains within acceptable temperature limits. IRN 100

The number of SIs that can be in operate mode simultaneously is also limited by power constraints, and will be an operational decision based on the electrical power system load capability as well as thermal considerations.

4.6.1.2 Non-Operational Thermal Interfaces. The non-operational modes occur when no science mission operations are being conducted; however, the SI's must be able to be returned to an operate condition. There is no requirement for the SI to maintain the interface temperatures. The OTA & SI interface temperatures are greater than -20°C except for safing when the OTA and SI interface temperatures are greater than -25°C.

4.6.1.2.1 Pre-Flight. The pre-flight environments include transportation, storage, pre-launch and ground testing.

4.6.1.2.1.1 Transportation and Storage. The SI environment shall be held within the temperature range of 10°C (50°F) to 32°C (90°F); the relative humidity shall be ≤50%; and the pressure shall be .34 to 1.07 Atmospheres. IRN 106

4.6.1.2.1.2 Prelaunch and Ground Testing. The SI environment shall be held within the temperature range of 18°C (65°F) to 27°C (80°F); the relative humidity shall be ≤50%; and the pressure shall be 0.34 to 1.07 Atmospheres. IRN 106

4.6.1.2.2 Flight. The non-operational flight modes are defined as launch, ascent, initial deployment, unscheduled maintenance, retrieval, scheduled maintenance, orbiter re-entry and return to earth, post landing and safing. IRN 100

4.6.1.2.2.1 Launch and Ascent. Lift-off effective sink temperatures are between 21°C and 25°C.

4.6.1.2.2.2 Deployment. The SI will be housed in the SIPE during the deployment phase. The SIPE will maintain all SI components between 18 to 25°C. During transport of the SI from the SIPE to the HST, and until hold mode power is applied, the mission timeline will be designed to maintain the SI within the non-operational temperature limits specified by the SI.

(Supersedes Page 4.6-11 dated 29 May 1992)

4.6.1.2.2.3 Retrieval. The SI effective sink temperatures during HST retrieval are between -50°C (TBR) and 0°C, (TBR). During retrieval, when power is available, the power provided will be hold mode power. Additional power is provided, if available, to prevent damage prior to a power-off period. The maximum time power-off during retrieval is three hours. IRN 100

(NEW PAGE CREATED BY IRN 106)

4.6.1.2.2.4 Scheduled Maintenance. The SI effective sink temperatures during HST maintenance are between -50°C (TBR) and 0°C (TBR). During maintenance when power is available, the power provided will be hold mode power. Additional power is provided to prevent damage prior to a power-off period. The maximum time power is off is 6 hours. The minimum time power is on prior to the power-off period is 18 hours. IRN 100

4.6.1.2.2.5 Safing. The SI effective steady state sink temperatures during HST Safing Condition (HST in sun pointing orientation) are between -40°C to 0°C. During the transition from hold or operate mode to safe mode, the effective sink temperature is defined by:

$$\frac{T - T_0}{T_s - T_0} = 1 - e^{-\sqrt{0.25t}}$$

Where
T = sink temperature at time t
T_0 = sink temperature at time time t = 0 (Ref. Figure 4.6-3)
T_s = sink temperature in safe mode
t = elapsed time from entering safe mode (Hr)

SIs are limited to hold power during safing.

4.6.1.2.2.6 Entry. The SI effective sink temperatures during entry are between -40°C and 50°C. The entry period is a maximum of 45 minutes.

4.6.1.2.2.7 Post Landing. The SI effective sink temperatures during Post-Landing are between 10°C and 32°C after 4 hours from start to entry.

4.6.1.3 Contingency Retrieval. Contingency retrieval is a mode after which the HST is in gravity gradient orientation and is not required to be returned to science mission operations. The SI effective sink temperatures during contingency retrieval are between -65°C and -40°C. SIs are limited to hold power. SIs shall maintain structural integrity and not become a hazard to the shuttle during return to earth.

(NEW PAGE CREATED BY IRN 100)

4.6.2 Magnetic Environment. The cumulative magnetic field on an SI is obtained by adding the fields given below. IRN 100

4.6.2.1 Magnetic Fields. All axial SI components, when subjected to the following magnetic fields, shall be without any degradation in their performances:

a. The earth's magnetic field which is composed of a maximum time varying component of 0.33 gauss and a constant component of 0.21 gauss with a subtended angle of 65 degrees.

b. A time varying magnetic field generated by magnetization of soft magnetic materials and by electromagnetic devices within the HST as given in Figure 4.6-4. This field is in addition to the earth's field.

c. A magnetic field that remains fixed with respect to the HST axes for any HST orientation as given by Figure 4.6-5. This field is in addition to the earth's field.

4.6.2.2 SSM and SI Magnetic Field Intensity. The maximum magnetic field caused by the SI in any orientation at the SI envelope shall not exceed 0.8 gauss. The maximum total magnetic field caused by the SSM in any orientation within the SIs volume shall not exceed 0.2 gauss.

4.6.2.3 OTA Magnetic Field Intensity. The maximum magnetic field generated by the OTA at any HST attitude orientation, when operating in the earth's magnetic field, does not exceed the levels specified below.

a. A level of 1.0 gauss time-varying field at the boundary of the envelope allocated to the axial SI as shown in Figure 4.3-1 but bounded by the VI station plane 198.44 and the aft end of the SI(-VI).

b. A level of 0.1 gauss constant magnetic field at the boundary of the envelope allocated to the axial SI as shown in Figure 4.3-1.

4.6.2.4 Magnetic Induction Field. The "Spike Test" requirement of MIL-STD-461A/3, Method RS02 shall be applied to all standard wire cable bundles interfacing with the unit under test. Sixty volts peak will be used for these tests. IRN 106

(Supersedes Page 4.6-13 dated 29 May 1992)

IRN 100

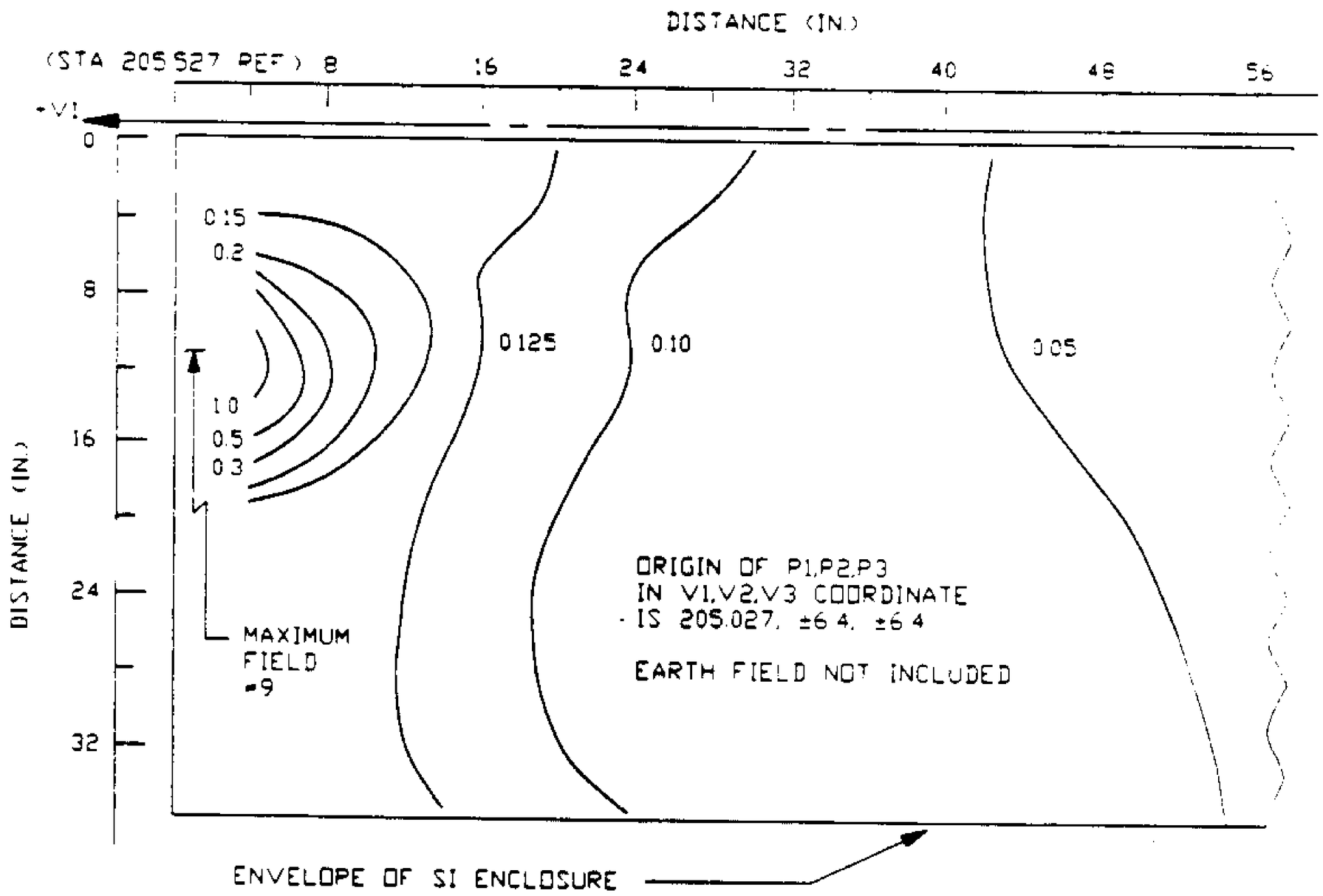

Figure 4.6-4 Time varying Magnetic Field at Axial SI in Gauss

(NEW PAGE CREATED BY IRN 100)

IRN 100

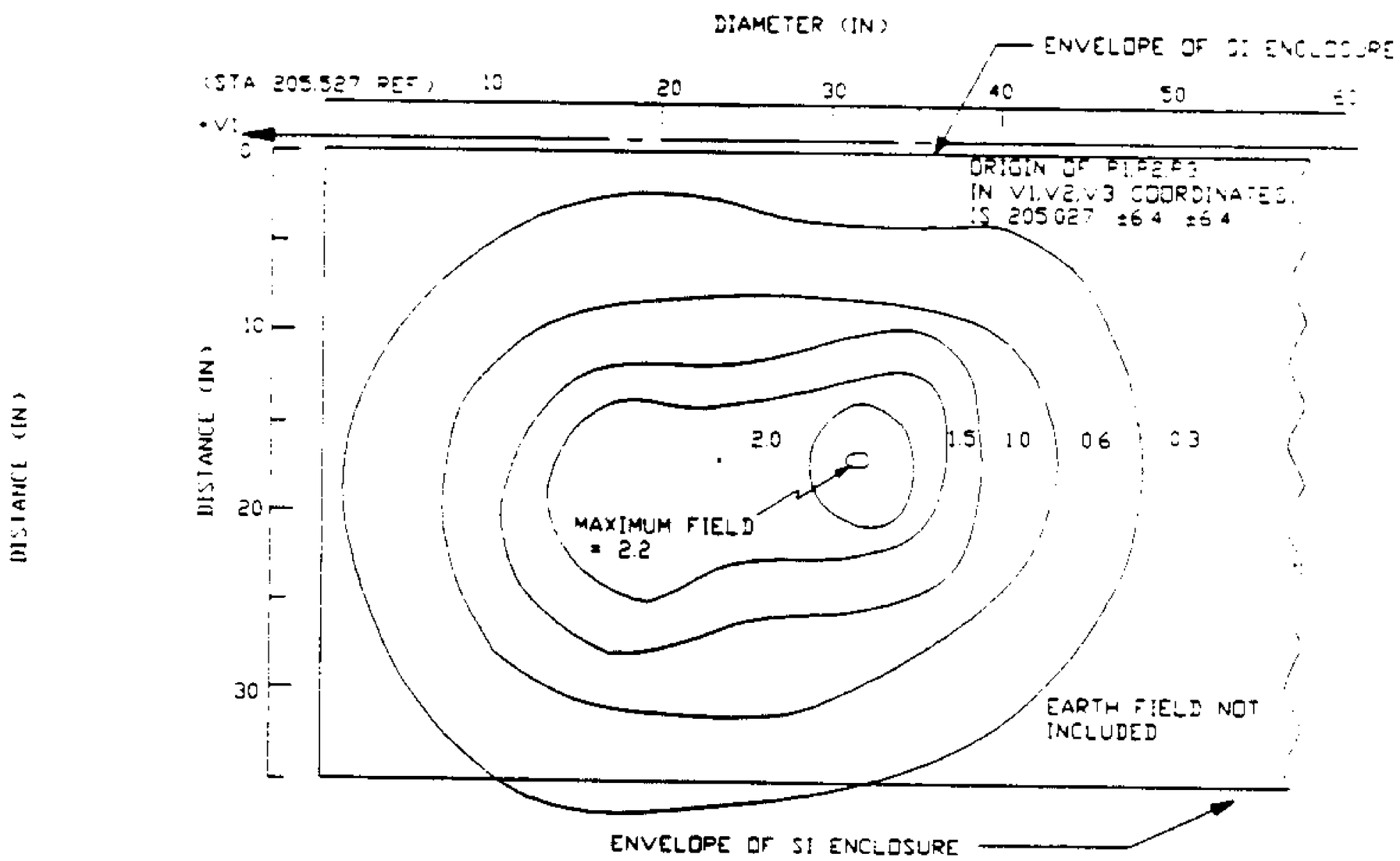

Figure 4.6-5 Fixed Magnetic Field at Axial SI in Gauss

(NEW PAGE CREATED BY IRN 100)

4.6.3 Contamination Control. IRN 100

4.6.3.1. Volumetric Cleanliness. The contamination environment to which the SIs are subjected during all ground operations and during ascent and orbital operations is class 10K volumetric cleanliness per Figure 4.6-6. This cleanliness requirement does not apply during reentry and landing.

4.6.3.2 Surface Cleanliness. For axial ORIs the external surfaces shall conform to level 400 B per MIL STD 1246 B. Internal surfaces shall also conform to the requirements of level 400 B as a minimum, however the individual instrument contractor may specify a tighter internal requirement.

4.6.3.3 Material Outgassing. Each non-metallic material used must have a Total Mass Loss of less than 1% and a Collected Volatile Condensable Materials of less than 0.1% when tested under the following conditions. Material temperature shall be 125°C + 1°C, with collector plate temperature at 25°C + 1°C, pressure at $5x10^{-5}$ torr or less and vacuum exposure time of 24 hours.

4.6.4 Ionizing Particle Radiation

The omni-directional ionizing particle environment within the aft shroud is specified in Table 4.6-1.

4.6.4.1 Galactic Cosmic Environment. Electronic parts used shall meet full performance in the galactic cosmic environment specified herein. A plot of the integral flux versus LET (Linear Energy Transfer) of the various energetic ions is shown in Figure 4.6-8 as a function of several shielding thicknesses. Except for the imaging components (mirrors, baffles etc.), all electronic components (CCDs, electro-optical devices, ICs, discrete semiconductors etc.) that support scientific measurements, navigation and guidance must operate through the galactic cosmic environment without impacting system operation. IRN 117

All designs must attempt to select parts with LET threshold greater than 25 MeVcm2/mg. However, if a LET threshold of greater than 25 MeVcm2/mg can not be achieved, the following approach shall be taken. Due to the sharp drop in the integral flux intensity of the environment at a LET of 1.5 MeVcm2/mg, all electronic parts must have a LET threshold greater than 3 MeVcm2/mg. Applications where parts with less than 25 MeVcm2/mg, such as opto-couplers (< 1MeVcm2/mg), Dynamic Random Access Memory (DRAM) or Static Random Access Memory (SRAM) (1-4MeVcm2/mg) must be used, such applications shall employ hardening techniques to mitigate the possibility of single event effects. An analysis shall be performed to determine the system risk and the rate of the single event effect to the system.

ST-ICD-02E
27 FEBRUARY 1985
IRN 100
29 MAY 1992

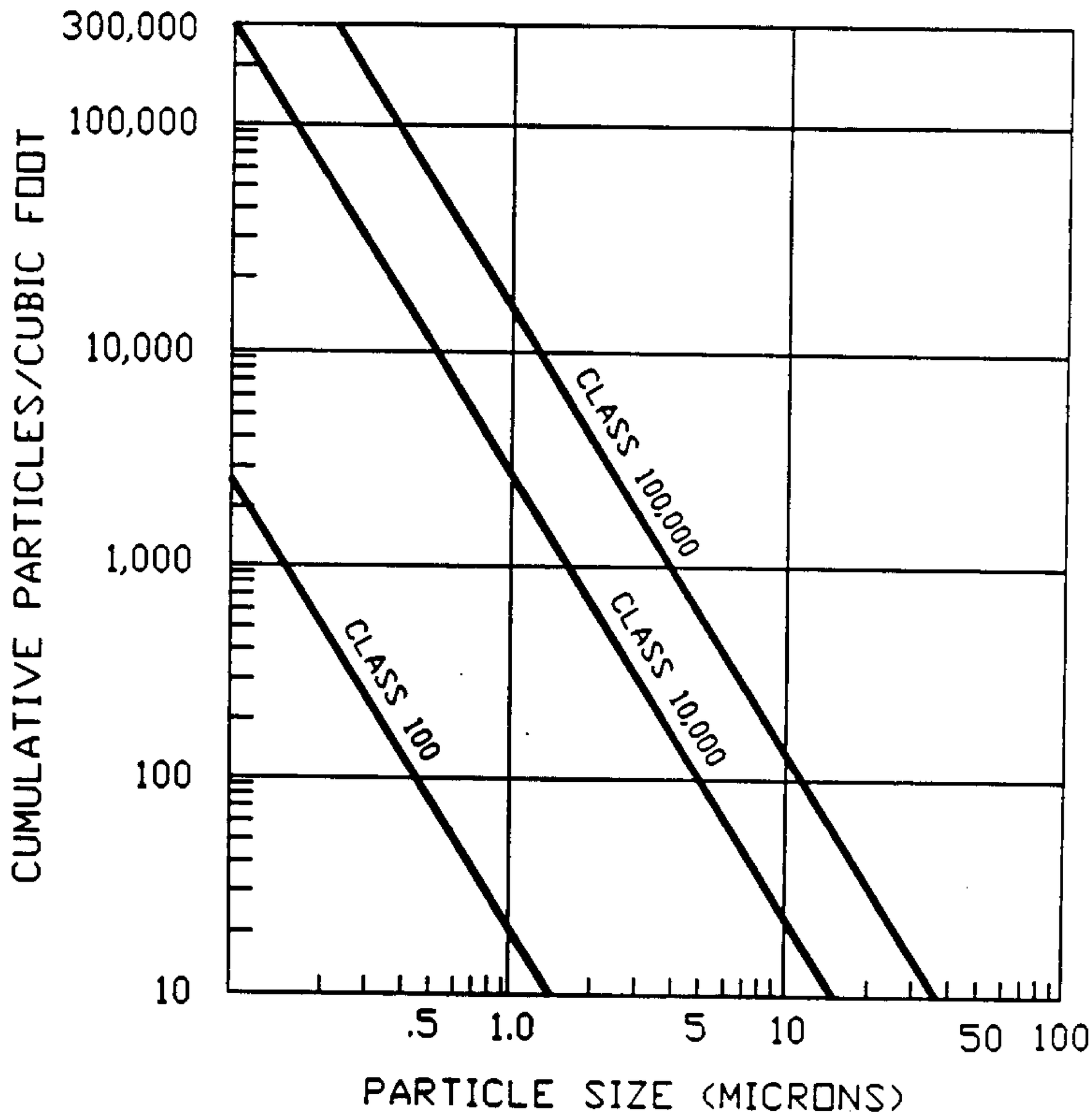

IRN 100

Figure 4.6-6 Particle Size Distribution Curves

(NEW PAGE CREATED BY IRN 100)

IRN 100

TABLE 4.6-1

MAXIMUM INTERNAL IONIZING PARTICLE RADIATION
AFT SHROUD

Trapped Electrons

Cumulative Fluence:	1.2×10^{10} e/cm² :	E>0.5 MeV
	6.3×10^{9}	1
	1.2×10^{9}	2
	1.95×10^{8}	3
	2.08×10^{6}	4

Trapped Electron Ionizing Dose: 6.5×10^{2} rads(Si)
Maximum Electron Flux: 1.35×10^{4} e/cm²-sec: E>0.5 MeV
Maximum Dose Rates: 7.3×10^{-4} rads(Si)/sec

Trapped Protons

Cumulative Fluence:	2.2×10^{10} p/cm² :	E>4 MeV
	2.03×10^{10}	10
	1.91×10^{10}	20
	1.78×10^{10}	40
	1.12×10^{10}	100

Trapped Proton Ionizing Dose: 4.3×10^{3} rads(Si)
Maximum Proton Flux: 3.6×10^{3} p/cm²-sec: E> 4 MeV
Maximum Dose Rate: 7×10^{-4} rads(Si)/Sec

Total T pped Proton plus Trapped Electron
Ionizing Dose: 4.95×10^{3} rads(Si)

NOTES:

(1) The values stated above are based on predicted external radiation conditions for a five year period during a Solar Minimum.

(2) For scientific instruments whose mission time is not five years in space, the total ionizing dose can be determined by multiplying the appropriate value by the mission lifetime, in years, and dividing by five.

(3) The maximum dose rates are calculated for traversals through the South Atlantic geomagnetic anomaly.

(NEW PAGE CREATED BY IRN 100)

4.6.5 Meteoroid. Meteoroid protection is supplied by the SSM when subjected to the meteoroid flux model as defined in Section 2.5 of NASA TMX-64627. The SSM shall provide a probability of no failure of SI components of at least 0.95 for 2 years. During servicing meteoroid protection is afforded an SI while it is in a SIPE. IRN 106

4.6.6 Pressure Environment and SI Differential Pressure. The operational pressure environment for an Axial SI, which is carried within an Axial SIPE during launch, varies in accordance with the pressure characteristics of the Shuttle cargo bay. The cargo bay ascent and descent pressure profiles are shown in NSTS 07700, Volume XIV, Figures 10.6.1.2-1 and 10.6.1.3-1. Maximum SI wall differential pressure, excluding dewar, versus a ratio of vent area to volume is given in Figure 4.6-7.

4.6.7 Humidity. During all ground, transportation, storage, and prelaunch operations the relative humidity is 0 to 50 percent maximum. IRN 100

During entry, descent and landing the humidity of the air on entering the SIPE is uncontrolled. All SI surfaces which are at temperatures below the dewpoint of the incoming air are subject to condensation. After touchdown, a post landing purge maintains the absolute humidity of the cargo bay at less than 34 grains of water vapor per pound of air.

(Supersedes Page 4.6-19 dated 29 May 1992)

ST-ICD-02E
27 FEBRUARY 1985
IRN 100
29 MAY 1992

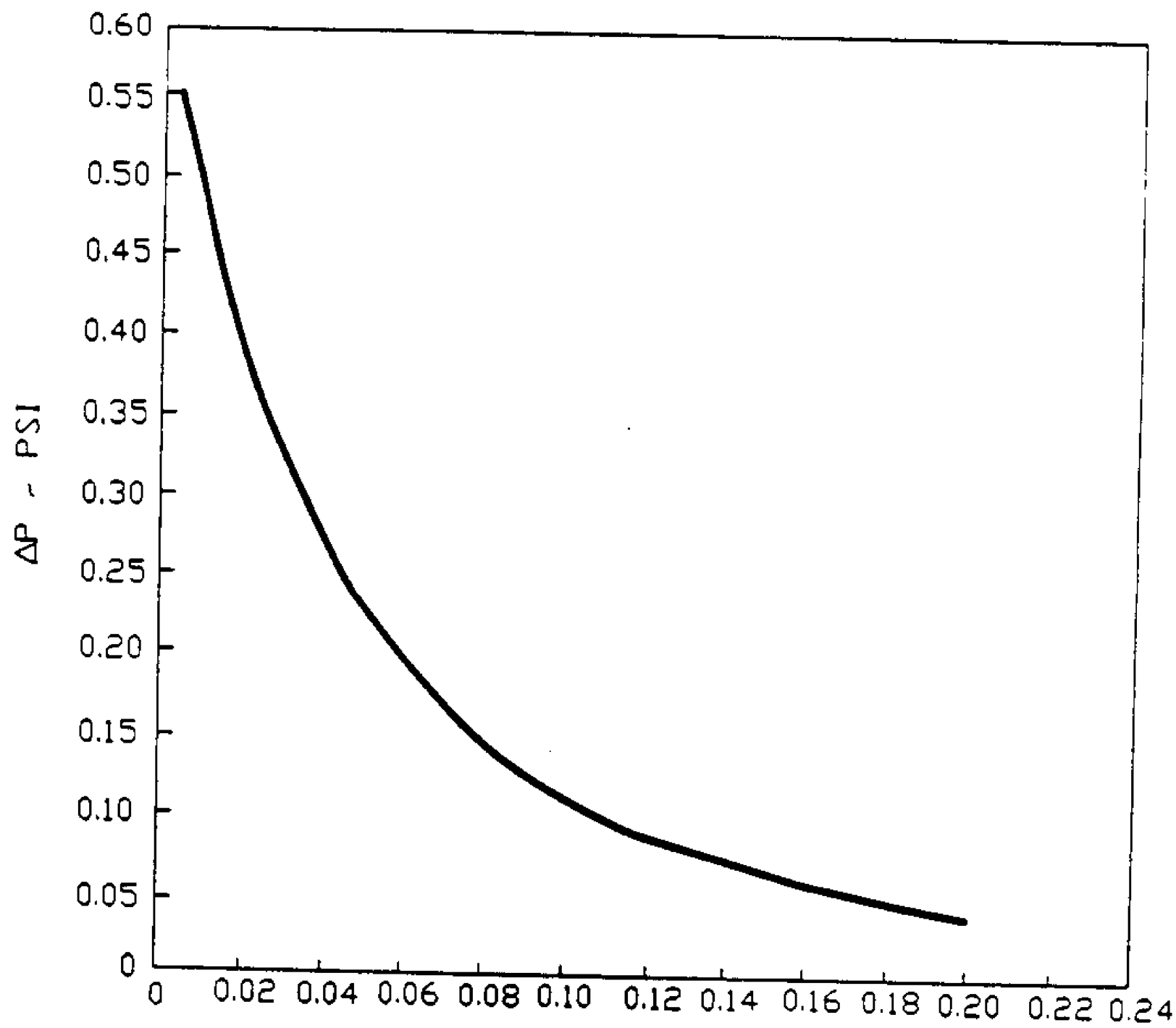

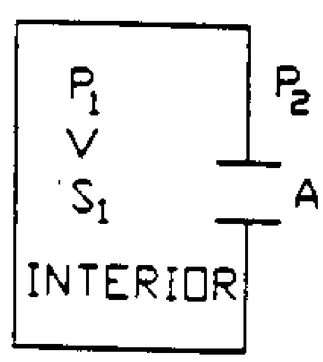

$\Delta P = P_1 - P_2$ ~ PSI

A = SI VENT AREA ~ IN^2 (UNFILTERED)

V = SI COMPARTMENT VOLUME ~ FT^3

NOTE: FOR A FILTERED OPENING, THE VENT AREA (A) IS EQUAL TO THE EFFECTIVE AREA OF THE FILTER.

Figure 4.6-7 Maximum SI Wall Differential Pressure Versus a Ratio of Vent Area to Volume

(NEW PAGE CREATED BY IRN 100)

IRN 100

IRN 117

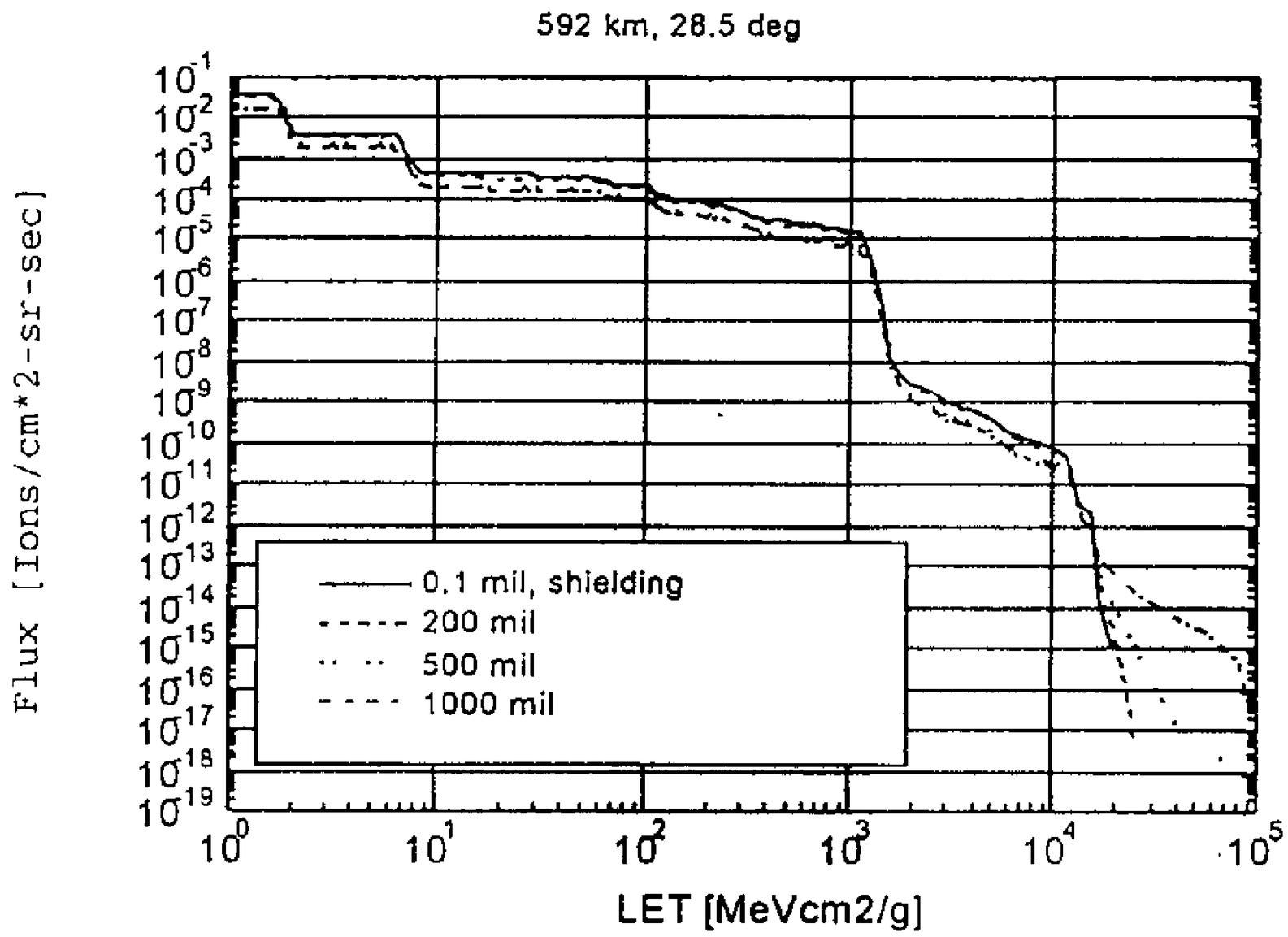

Figure 4.6-8 Galactic Cosmic Environment

4.7 Electrical Power. The power consumed by each SI, including any peak power excursions, shall not exceed 150 watts (TBR) (averaged over one orbit period). This 150 watt (TBR) allocation includes any power required by the SI-C&DH Remote Module (RM) mounted in each SI. A peak power of 250 watts/SI for 2 minutes per orbit is permitted as long as the thermal constraints of 4.6.1 are maintained. IRN 100

4.7.1 Power Buses. The SSM supplies each SI two switched power buses for SI operating power and two switched power buses for the RM power as shown in Figure 4.7-1. Each bus conforms to the requirements specified in the following paragraphs. Under normal operating conditions the SSM powers all power buses simultaneously. Each SI ensures that all primary power returns are isolated from structure by a minimum of 1 megohm and returned through the interface connector to the SSM negative return bus. IRN 106

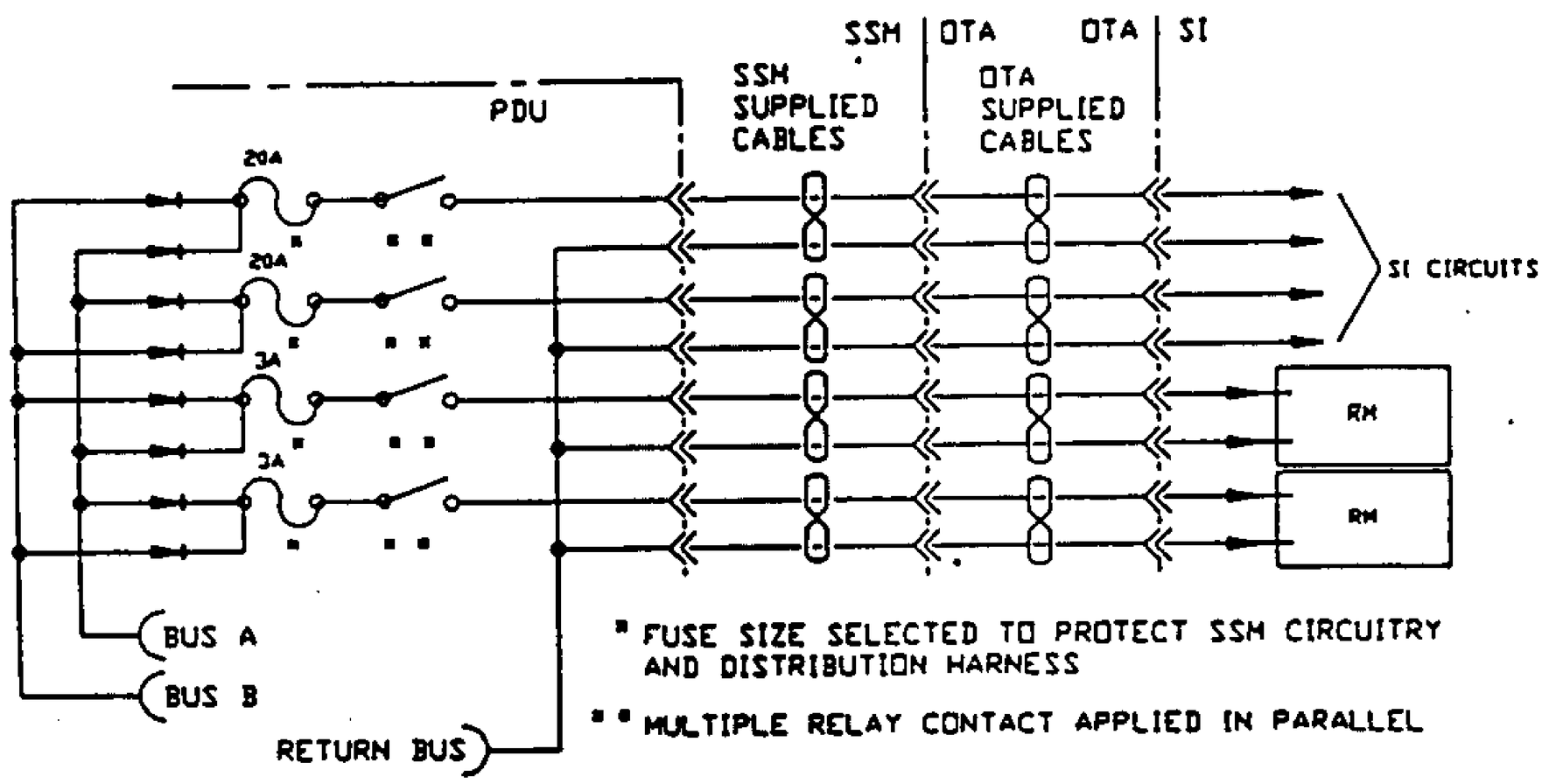

IRN 100

Figure 4.7-1 Typical SSM/OTA/SI Power Interface

(Supersedes Page 4.7-1 dated 29 May 1992)

4.7.2 SI Interchangeability. All SI power interfaces are identical such that any SI can operate from either power bus and from any axial bay in the FPS.

4.7.3 Fusing. Each power bus is fused in the SSM EPS to protect harnessing and other HST equipment from shorts occurring in SI equipment. The SSM fuse size ensures that steady state current, surge current, and in-rush currents (of the SI having the highest load) have no deleterious effects on fuse operation. Fuse size and characteristics are as shown in Figure 4.7-1 and Table 4.7-1. The input filter capacitance in the RM is limited to a maximum of 500 microfarads to keep from blowing the three ampere fuse. IRN 100

Table 4.7-1

CIRCUIT PROTECTION

BLOW TIME	RATED FUSE SIZE (AMPS)	BLOW CURRENT (AMPS)
0.1 sec*	3	8.3
0.1 sec*	20	72

* Fuse blow current based on -55 °C and a max rating factor of 110 %.

4.7.4 Switching. SSM switching devices used for control of the primary and redundant buses are capable, as a minimum, of switching currents up to the fuse rating to ensure "soft shorts" below the fuse rating can be removed from the SSM power buses. Each switch contact is capable of switching the rated currents shown in Table 4.7-1. The internal SI power control shall be capable of switching in-rush currents and turn-on voltage transients.

4.7.5 Operating Voltage. The SSM supplies to each SI power interface connector a nominal operating voltage of +24 to +32 Vdc under maximum load conditions. Each SI shall be capable of surviving, but is not required to operate within specification, during application of voltages of +21 to +24 and +32 to +35 Vdc.

4.7.6 Bus Control Circuit. No single point failure within an SI shall simultaneously blow both primary and redundant bus fuses.

4.7.7. Section not used.

(NEW PAGE CREATED BY IRN 100)

4.7.8 Grounding of SIs to HST Structure. The HST will utilize a central single point grounding system. All primary power returns must be isolated from the SI structure by a minimum of 1 meg Ω. The SI cases shall be grounded to the aft shroud by the existing short copper grounding straps in the OTA. The bonding straps are removable for in-orbit maintenance. The bonding resistance between the bonding strap and each end connection to structure shall not exceed 2.5 milliohms. The bond strap dimensions are 22.0 inch max. x 1.62 inch min. x 0.010 inch. IRN 106

The bond strap resistance does not exceed 2.0 milliohms and the inductance does not exceed 0.4 microhenries when determined by analysis in accordance with the following formula: IRN 100

$$L = .00508\ l\left(2.303\ \log \frac{2\ l}{w + t} + 0.5 + .2235\ \frac{w + t}{l}\right)$$

Where l = length in inches between attach points
w = width in inches
t = thickness in inches
L = Inductance in microhenries

4.7.8.1 Mount Point Fitting Resistance. Minimum resistance of each mount point fitting is 1K ohm. IRN 117

4.7.8.2 Multi-Layer Insulation (MLI). For multi-layer insulation forming an exterior surface, all the conductive MLI Layers shall be grounded to each other and the SI structure to prevent static charge buildup. The resistance between the MLI ground connection and the outer conductive MLI Layer shall be 100 K ohms or less. The measurement is from the ground connection to a point 1 inch distant on the MLI. The resistance from the ground connection to the SI structure ground shall be 1.0 ohm or less. IRN 100

4.7.8.3 Nonconductive Surfaces. The SI inboard surfaces shall be electrically non-conductive as shown in Figure 4.7-2, with a minimum resistance of 1000 ohms.

IRN 100

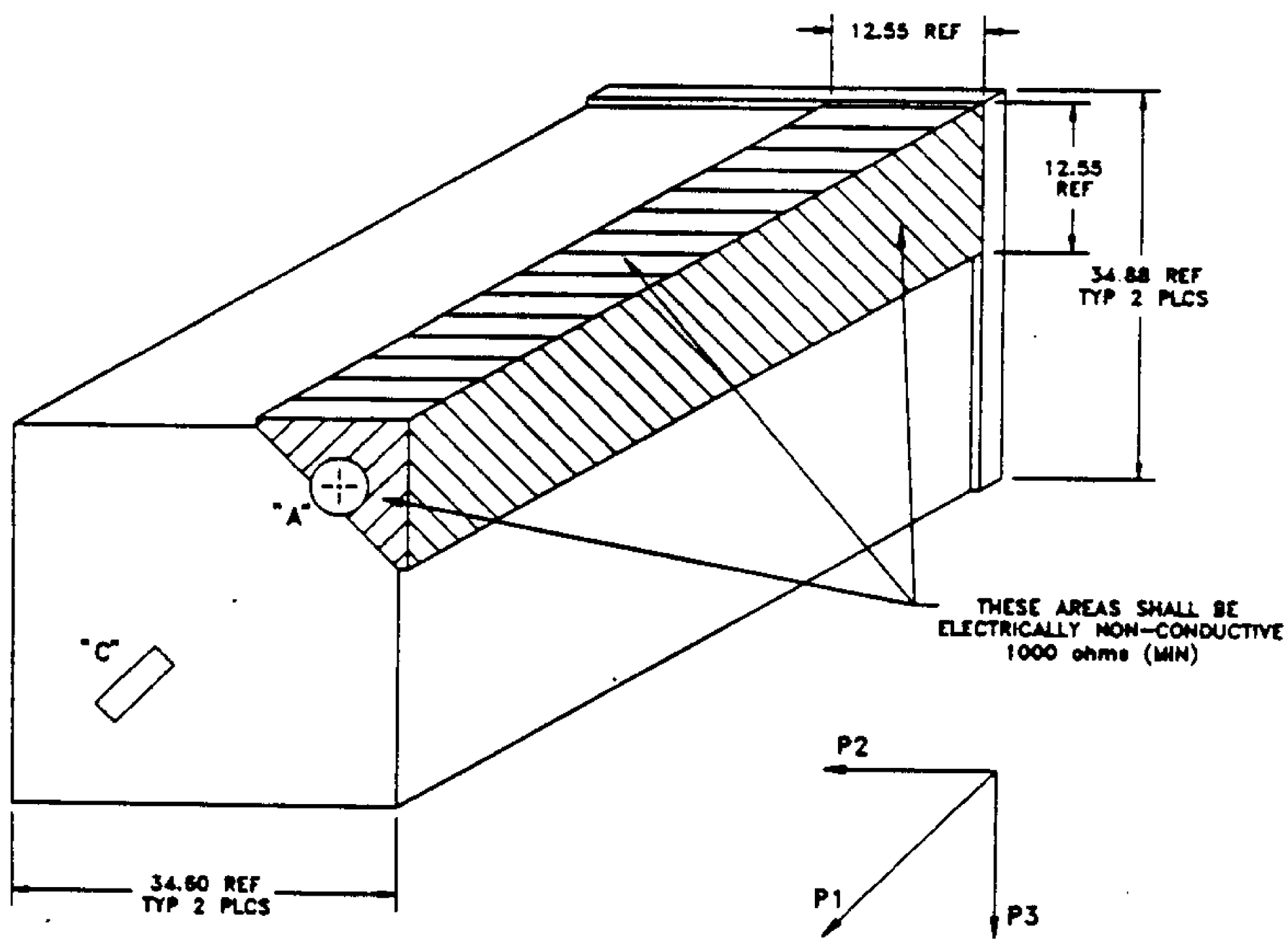

NOTE: AFT GUIDE STRIP FLANGE NOT REQUIRED TO BE NON-CONDUCTIVE

Figure 4.7-2 ORI Non Conductive Surfaces

(NEW PAGE CREATED BY IRN 100)

4.7.9 EMC. The SI shall be electromagnetically compatible with the SSM as specified in the following paragraphs.

4.7.9.1 Dynamic Impedance. The impedance of the power line (Figure 4.7-1) as seen by the SI is shown in Figure 4.7-3. These values include the bus impedance and the cable impedance between the SSM Power Distribution Unit and the SI connector. IRN 100

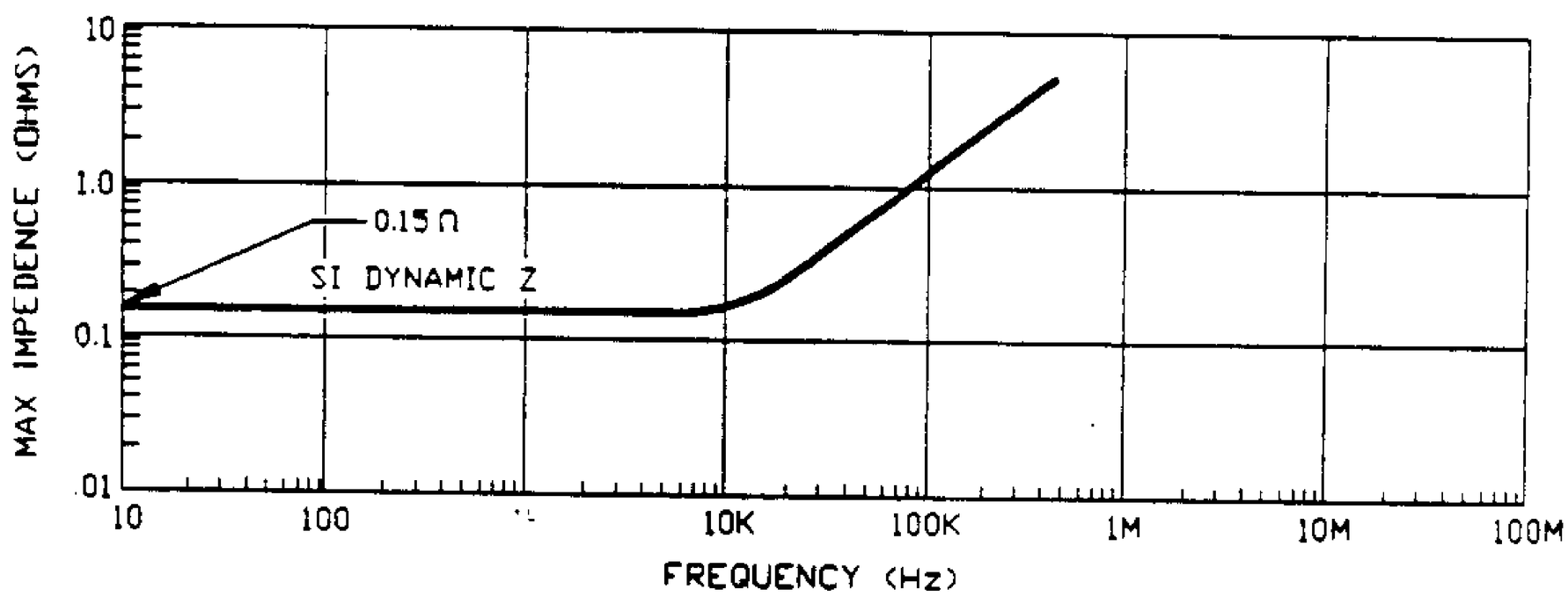

Figure 4.7-3 HST Power Dynamic Impedence at SI Connector

4.7.9.2 In-Rush Current. With power applied, the SI shall limit in-rush currents on any single bus during turn-on and during switching events to values within the envelope shown in Figure 4.7-4. Rate of rise shall not exceed 6 amps/μsec. These values apply at 30 ± .5 Vdc.

(NEW PAGE CREATED BY IRN 100)

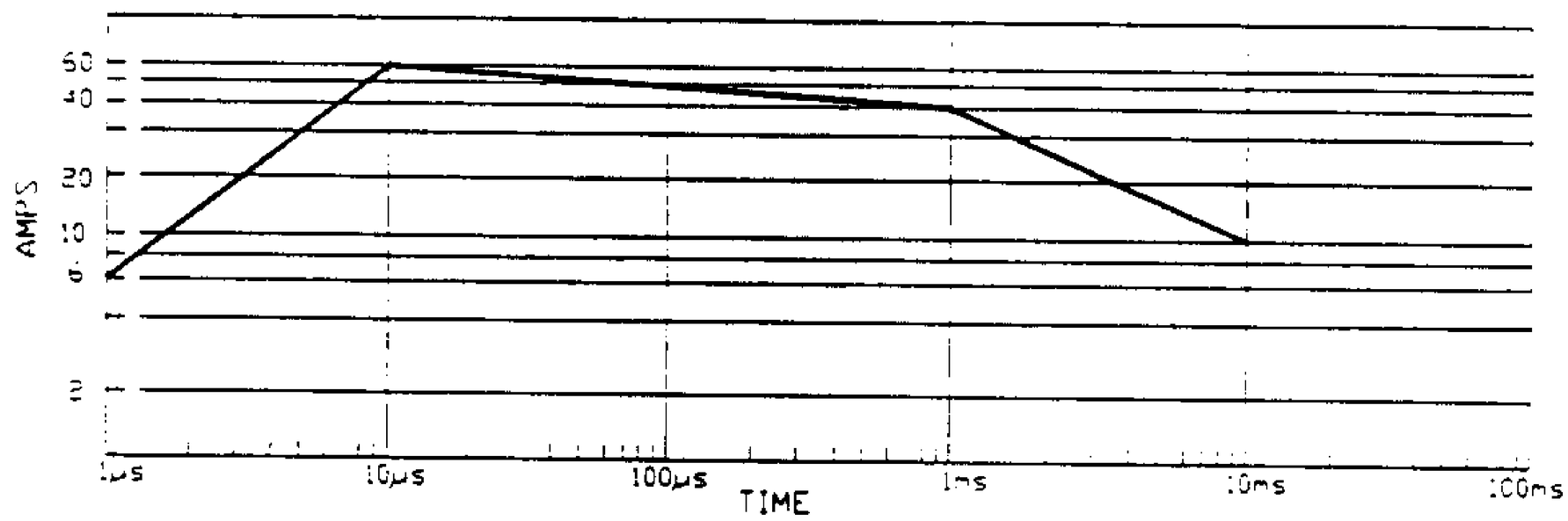

IRN 100

Figure 4.7-4 In-rush Time Current Profile

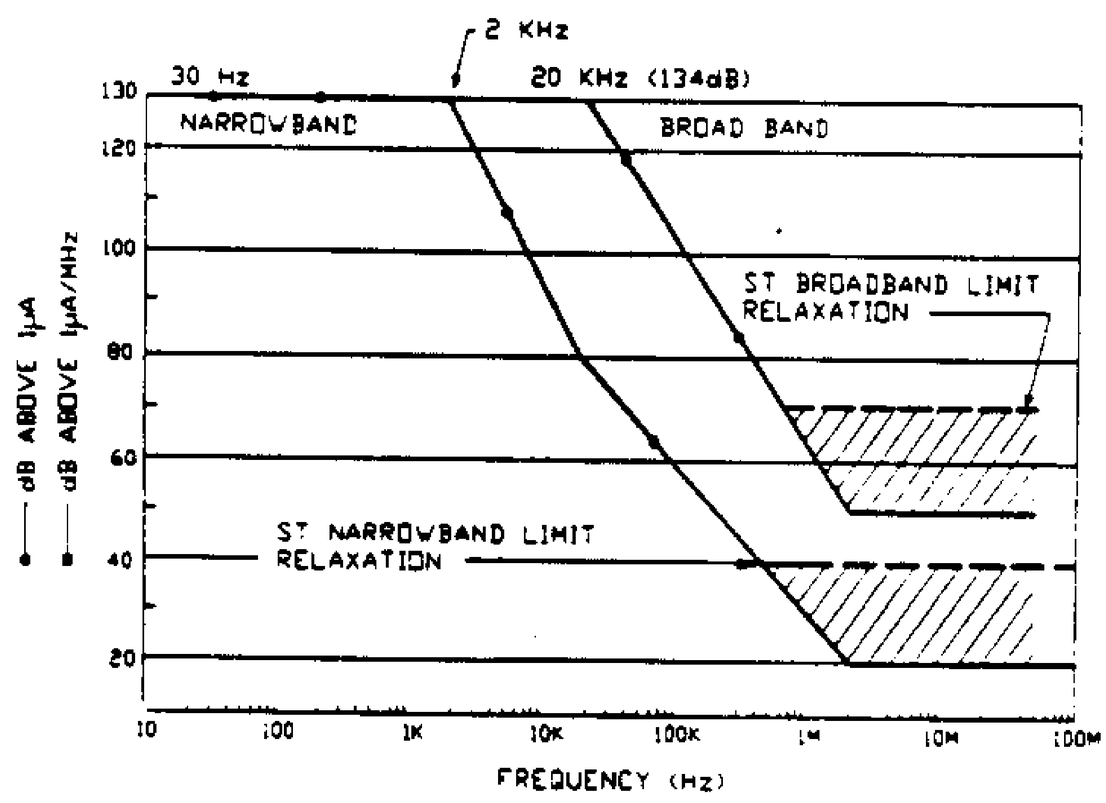

Figure 4.7-5 SI Generated Ripple and Noise Limits

4.7.9.3 SI Generated Ripple & Noise. The SI shall not generate ripple and noise on any single power bus in excess of the values shown in Figure 4.7-5. These values apply at 30 ± .5 Vdc.

4.7.9.4 Ripple and Noise Susceptibility. The SI shall not be susceptible to ripple and noise on the power lines. Susceptibility limits are shown in Figure 4.7-6. These values apply at 24.0 ± .1 Vdc. IRN 100

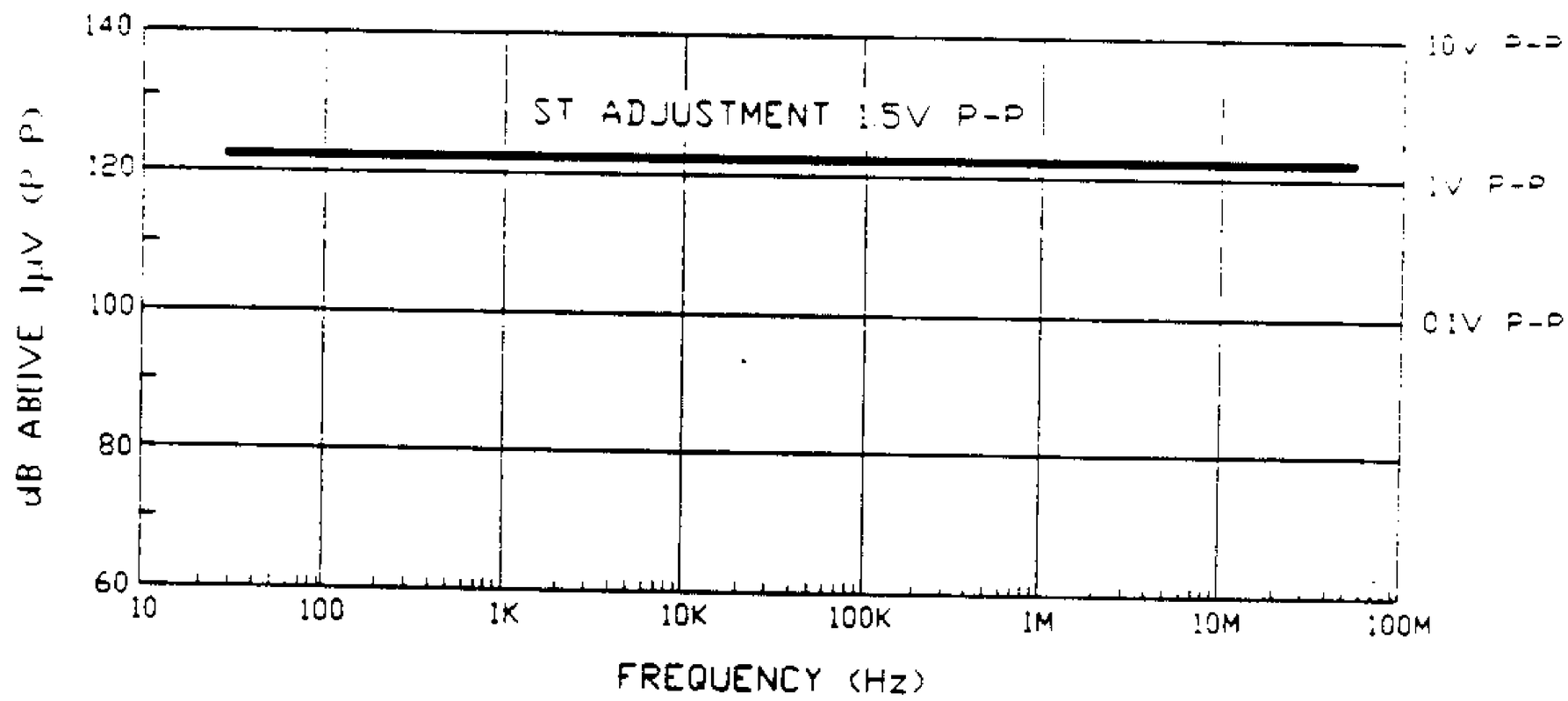

Figure 4.7-6 SI Equipment Ripple and Noise Susceptibility

(NEW PAGE CREATED BY IRN 100)

4.7.9.5 Transient Susceptibility. The SI shall not be susceptible to transients that may appear on the power lines, and between power line return and structure. Figure 4.7-7 defines the transient waveforms. These values apply at 24.0 ± .1 Vdc. IRN 100

4.7.9.6 Survival. The SIs must survive power interruptions up to 500 milliseconds duration, assuming diode isolation between power source and SI.

4.7.9.7 Radiated Susceptibility (E-Field), (Peak Field Strengths). The SI shall not be degraded in performance when subjected to the following radiated fields:

14 KHz to 35 MHz:	1 volt/meter CW (continuous wave)
35 MHz to 1 GHz:	1 volt/meter AM (modulation peak amplitude)
1 GHz to 3 GHz:	5 volts/meter AM (modulation peak amplitude)
*1.8 GHz to 2.3 GHz	10 volts/meter ("S" band) IRN 106
*14.5 GHz to 15.5 GHz	35 volts/meter ("KU" band)

Modulation 30 to 100 percent at 1.0 KHz (square wave)

*These requirements apply only during servicing operations with the shuttle. IRN 106

(Supersedes Page 4.7-8 dated 29 May 1992)

IRN 100, 117

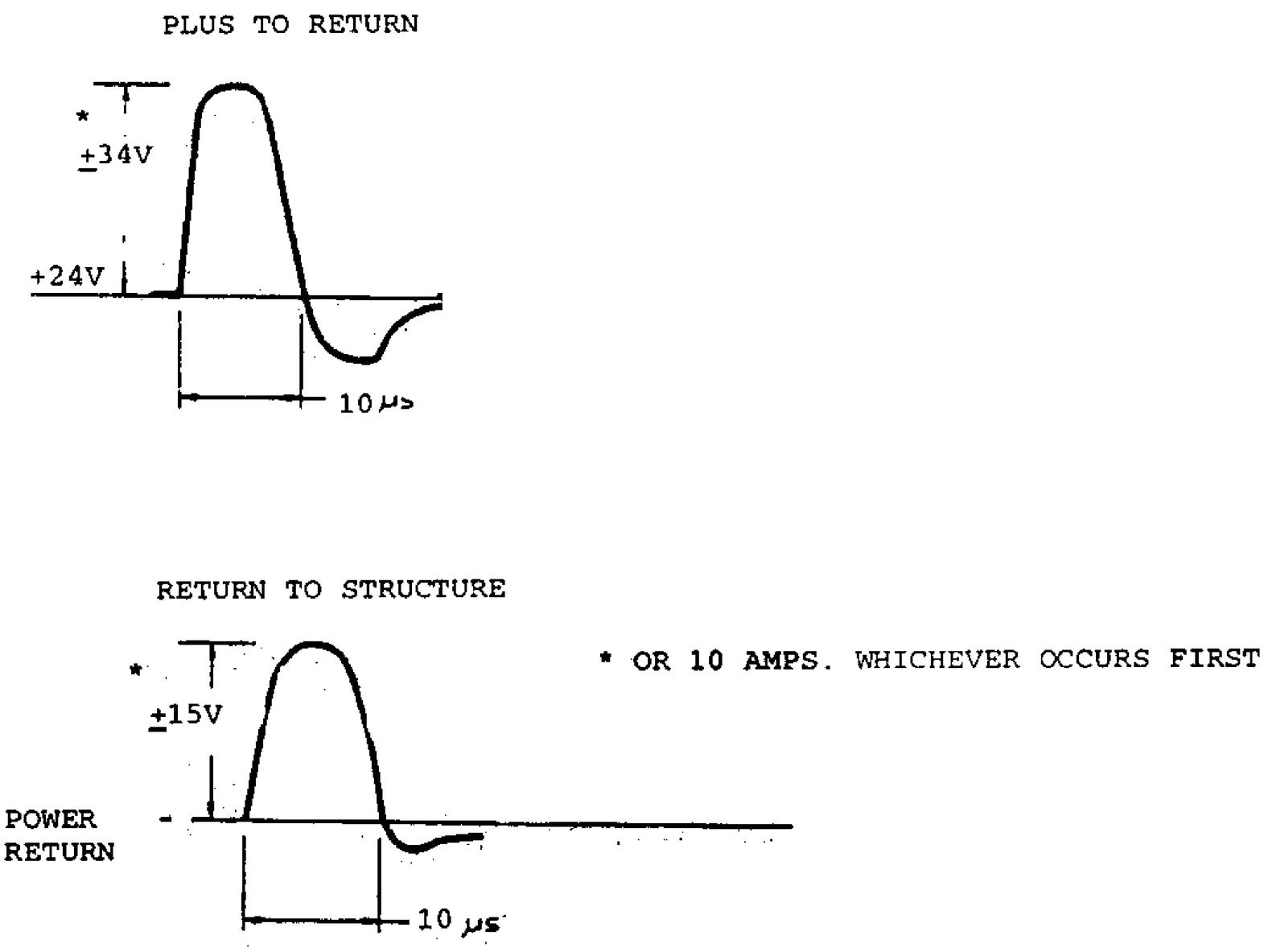

NOTE: PULSE REPETITION RATES: 2 TO 6 PULSES/SEC

Figure 4.7-7 Transient Susceptibility Test Waveforms

4.7.9.8 Radiated Electric Field Emissions. The SI shall not produce radiated electric field emissions, both narrowband and broadband, in excess of the limits shown in Figure 4.7-8 and 4.7-9. Test method will be in accordance with MIL-STD-462, Method RE02.

4.7.9.9 Return System DC Offsets. Equipment shall withstand without susceptibility DC offsets between any two return systems or between returns and structure of up to ± 0.5 VDC. (This does not apply to returns tied together or to structure inside the unit.) IRN 106

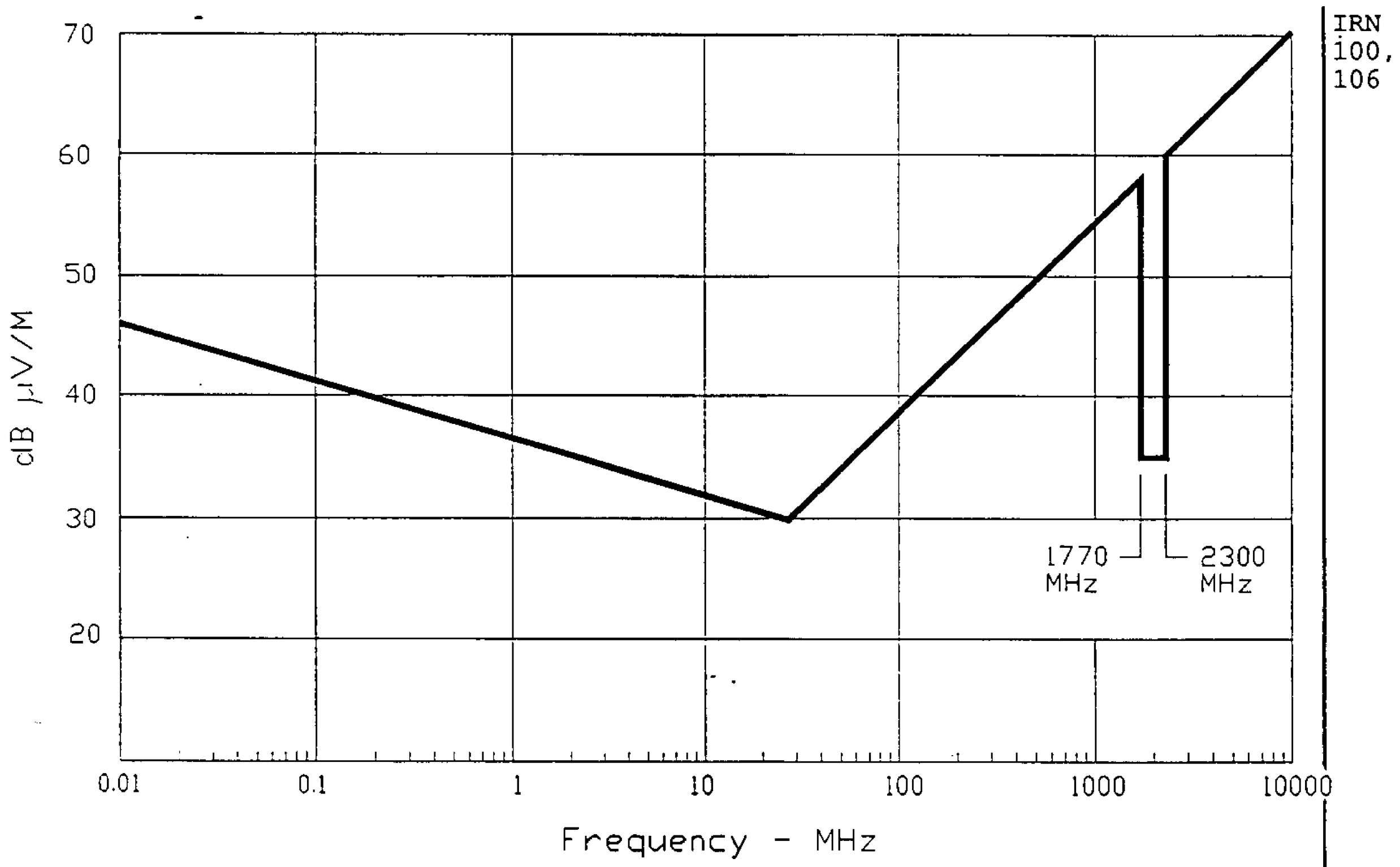

Figure 4.7-8 Limit for RE02 Narrow Band Radiated Emission

IRN 100, 106

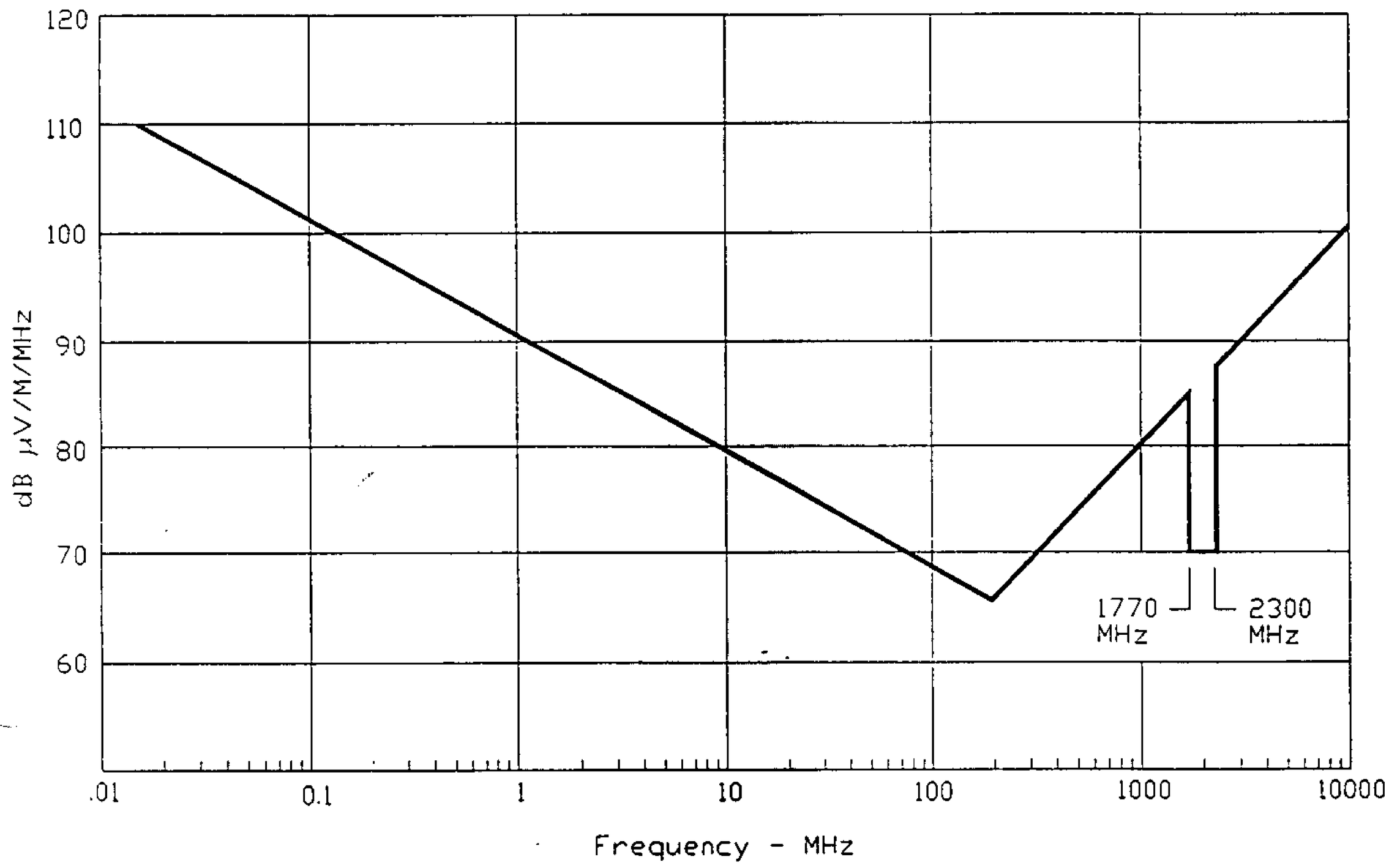

Figure 4.7-9 Limit for RE02 Broad Band Radiated Emission

(Supersedes Page 4.7-11 dated 29 May 1992)

4.8 Pointing Control. The HST Pointing Control System (PCS) has a functional interface with the SIs via the SI-C&DH. This interface includes the peak-up mode, Mode II target acquisition and verification, and the scan request flag in the Processor Interface Table (PIT). IRN 100

The HST PCS has a functional interface with the SI via the Space Telescope Operations Control Center (STOCC). This interface includes fine pointing, Modes I and III target acquisition and verification, scans, maneuvers, and solar system object tracking.

4.8.1 Fine Pointing. The SSM shall position stars in the FGSs' field of view such that the target star is located in an entrance aperture of any SI with an accuracy of 0.01 arc sec. IRN 106

4.8.2 Modes I, II and III Target Acquisition and Verification. The following modes of operation are required:

Mode I – The SI C&DH will transmit an image of the target field via the SSM to the ground control system where offset pointing corrections are computed based on the analysis of the scene and transmitted to the SSM. Real-time operation is presumed although delays in transmission can be accommodated on an infrequent basis.
Mode II – The SSM shall point the ST to a predetermined target position. The SI C&DH subsystem shall determine the exact location of the target in the SI aperture and transmit an offset correction (with respect to the SI coordinate system) to reposition the telescope. Command and data request message formats shall be established between the SSM and SI C&DH computers to insure positive control over this mode of operation.
Mode III – Pointing of the telescope is based on the program target coordinates alone. The locations of each aperture with respect to the field coordinates as defined by the FGSs are updated on an infrequent basis by a calibrating search scheme involving the positive acquisition of the target star by the instrument sensor.

4.8.3 Scans. The SSM PCS has capability for performing three scan modes: linear scan, continuous scan, and dwell scan. These modes are used for target acquisition and verification and for science observations. IRN 100

4.8.3.1 Linear Scan. A linear scan is a slew of the HST optical axis from point A to point B on the celestial sphere at a constant commanded rate. The HST scan begins before point A and continues after point B to attain and maintain a constant rate between A and B. Pointing accuracy during linear scans is given in Figure 4.8-1.

(Supersedes Page 4.8-1 dated 29 May 1992)

4.8.3.2 Continuous Scan. A continuous scan (same as serpentine or raster scan) consists of a series of linear scans alternating in direction and offset from one another by a commanded small-angle separation (see Figure 4.8-2). The principal scan direction is arbitrary with respect to the HST axes. There is a "dead-time" at the end of each linear scan line during the turn around (decelerate, small angle maneuver, accelerate). Turn around times are given in Figure 4.8-1.

(NEW PAGE CREATED BY IRN 106)

IRN 100

Scan Rate (arc sec/sec)	+ HST Single Axis Pointing Accuracy (arc sec rms)	Turn-around Time (sec)
0.00 - 0.02	0.020	20
0.02 - 0.21	0.030	20
0.21 - 20	* 0.2	20
20 - 40	* 1.0	60

\+ Pointing accuracy is defined relative to the commanded HST orientation. All values do not include effects of orbit ephemeris error contributions or parallax.

* Includes attitude reference drifts for scan durations of 60 sec

Control Device	Dwell Scan
FGS	0.007 sec stability (24 hours) rms
RGA	0.030 sec/sec drift rate rms

Figure 4.8-1 Pointing Accuracy and Stability During Scans

4.8.3.3 Dwell Scan. The dwell scan pattern is shown on Figure 4.8-2. The basic unit of a dwell scan is a commanded incremental maneuver and a commanded dwell (integration) time. This basic unit is repeated until the number of increments is completed. A small-angle maneuver is then commanded to offset the HST optical axis to the next line where a series of basic units is repeated in the opposite direction. A dwell scan of one line only is also permitted. The science observation occurs at the dwell points.

The time required to move between dwell points as a function of angle between dwell points is given in Figure 4.8-3.

4.8.3.4 Scan Control Parameters. The following typical parameters are provided to the SI in the downlink data:

For a linear scan, start and stop time of data collection region of each line.

For a dwell scan, arrival and departure time for each dwell point for data integration purposes.

Scans are commanded from the STOCC and executed by the SSM computer.

4.8.3.5 Scan Times. Total scan time is composed of two parts: time spent within the scan field and turn-around time. Time within the field is determined by the scan rate for continuous scans. For dwell scans, time is determined by the integration time at each dwell point, the number of dwell points, and the distance and rate between dwell points as given in Figures 4.8-3 and 4.8-4. The line change in a dwell scan is done by a small-angle maneuver with times given in Figures 4.8-3 and 4.8-4. IRN 100

Turn-around times are given in Figure 4.8-1, for continuous scans.

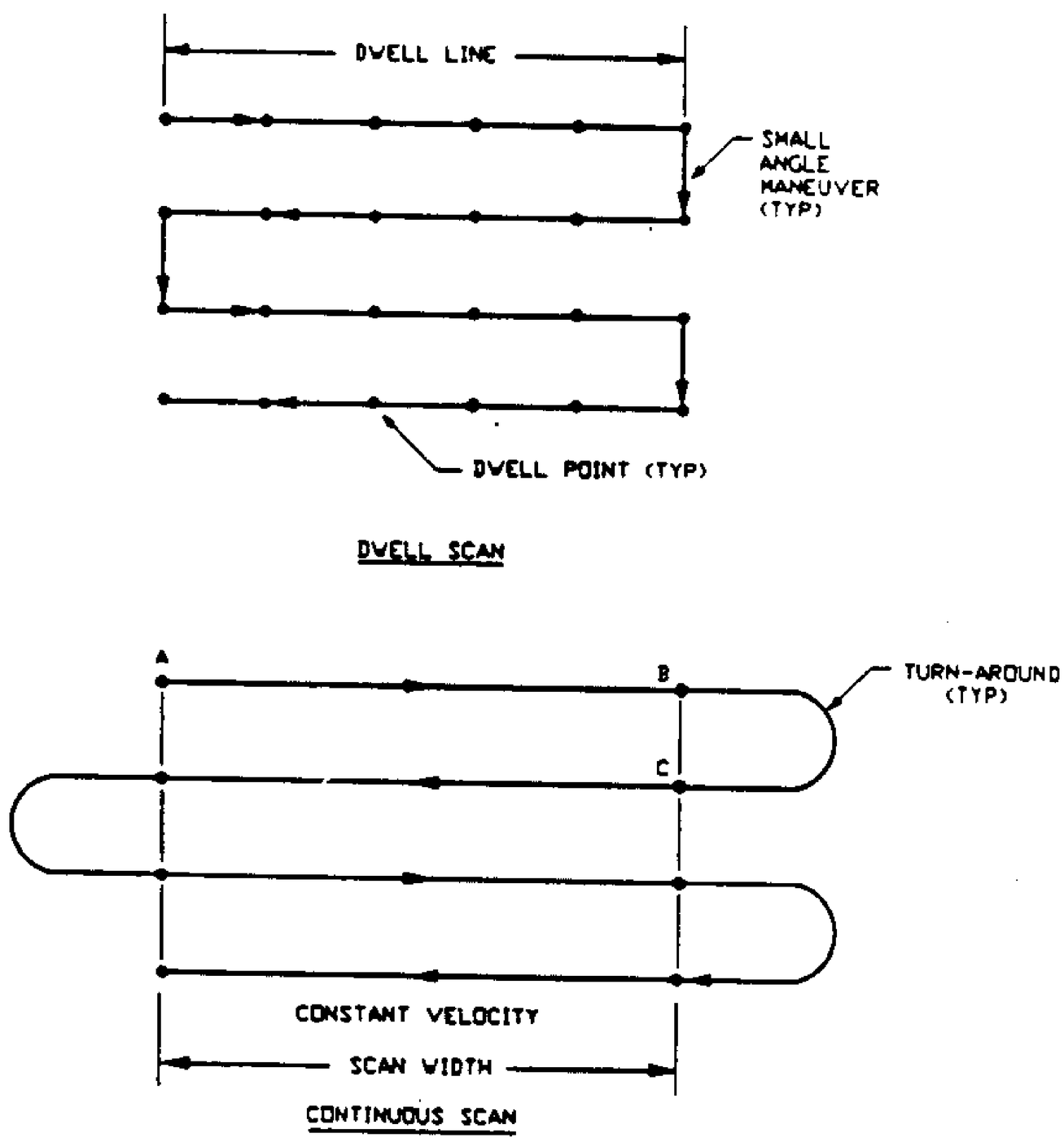

Figure 4.8-2 Scan Patterns

(NEW PAGE CREATED BY IRN 100)

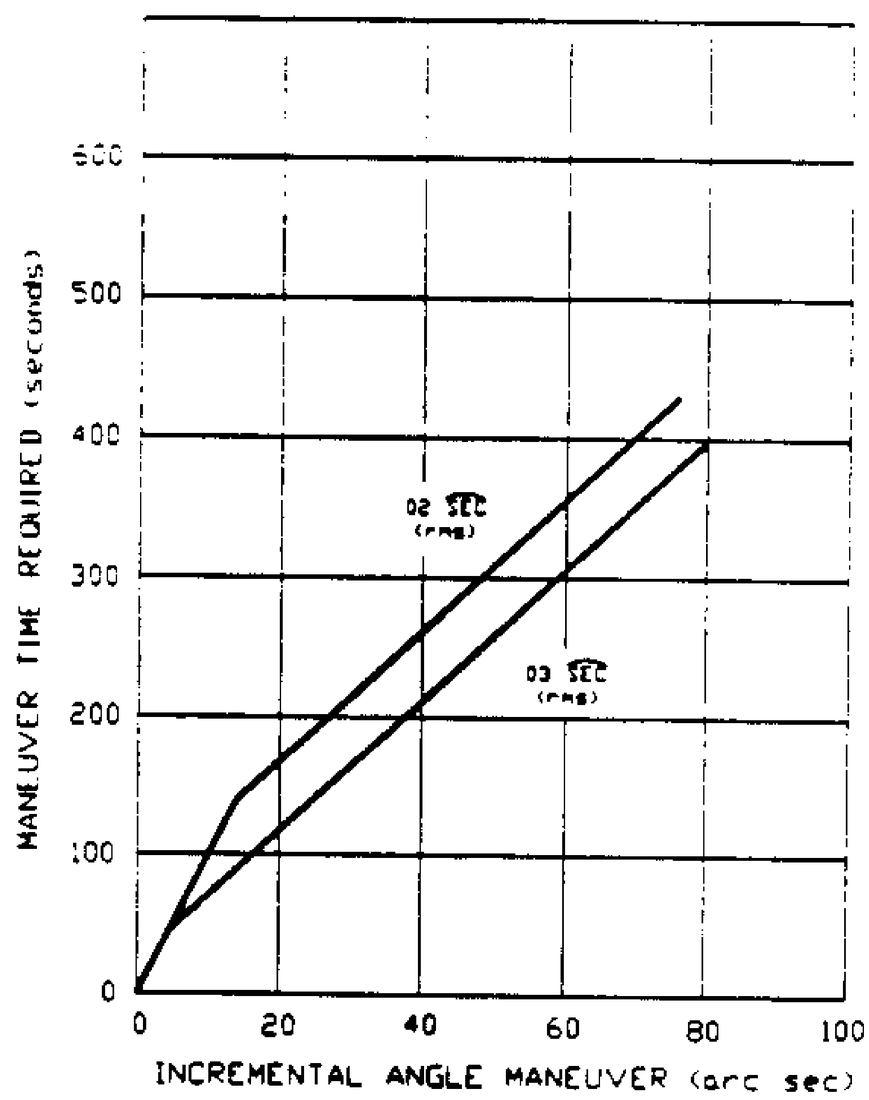

Figure 4.8-3 Maneuver Time Required to Limit Rate to 0.21 arc sec/sec

Small-Angle Maneuver (Arcsec)	Maneuver Time (Sec)
0 - 1	7
1 - 60	20
60 - 90	60

Figure 4.8-4 Preliminary Small-Angle Maneuver Criteria

(NEW PAGE CREATED BY IRN 100)

IRN 100

4.8.3.6 Peak-up Mode. A peak-up scan consists of any scan followed by a peak-up slew. The peak-up slew is commanded by passing a time word from the SI (SI-C&DH) to the SSM to identify the position of peak intensity within the scan as determined by the SI. IRN 100

The SSM stores or maintains an algorithm by which to locate the equivalent of 400 points uniformly distributed within the scan.

4.8.4 Solar System Object Tracking. Solar system object tracking is the same mode as a linear scan (para.4.8.3.1).

(NEW PAGE CREATED BY IRN 100)

4.9 Maneuver Characteristics. Small-angle maneuvers are for rotations of 900 arc-sec or less. Time for small-angle maneuvers under RGA control are given in Figure 4.8.4 IRN 100

Time as a function of angle is given in Figure 4.9-1 for large-angle maneuvers (greater than 900 arc-sec).

The HST position command word resolution for all maneuvers is less than 0.002 arc-sec.

The maneuver curves given apply to any axis, including roll.

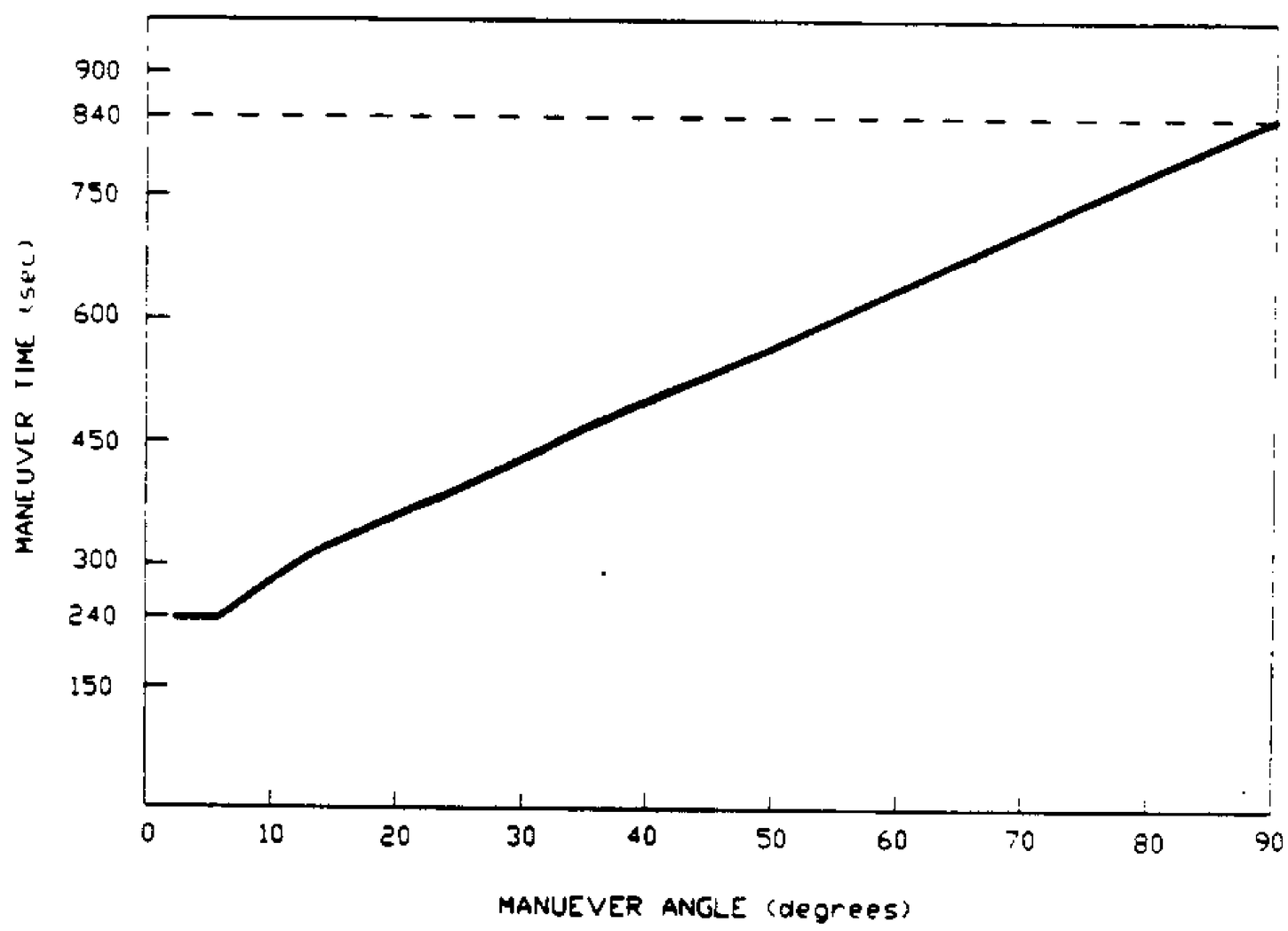

Figure 4.9-1 Maneuver Time Profile

(NEW PAGE CREATED BY IRN 100)

4.10 Alignment Stability of SIs/Uncompensated Momentum. The stability of each SI (treated as a rigid body) shall be controlled by the OTA structure such that the HST image stability and pointing repeatability are obtainable. IRN 106

The requirements are:

Image stability for periods up to 24 hours = 0.007 arc sec rms.
HST pointing repeatability for periods up to 100 hours = 0.01 arc sec.
These HST requirements, in terms of line of sight (LOS) errors, are subdivided among the contributing modules as shown in Table 4.10-1.

Table 4.10-1 HST Stability Requirements

	Pointing repeatability: arc sec for 100 hours	Image Stability: arc sec rms for 24 hours
HST	0.010	0.007
SSM	0.000	0.006
OTA	0.008	0.003
SI*	0.002	0.002

*NOTE: SI values are requirements only to the extent that the SI needs to take advantage of full HST capability.

The SSM component includes all SSM errors that produce maximum image distortion during an observation.

These include:

a) Those generated by the SSM which result in image motions of the guide star with spectral content beyond the control system bandwidth.

b) Those which produce image motion of the guide star with respect to the FGS with frequency components within the control system bandwidth, and which are due to sources within the control system itself (including the FGSs), torques and forces internal to the SSM, and external or environmental torques and forces.

The OTA portions of the budgets shown in the table represent the motion of a data star image at the OTA f/24 focus measured in the P1, P2, and P3 SI coordinate system due to thermal/structural disturbances generated with the OTA.

The SI portion of the budgets shown in the table represent the image motion introduced within the SI by thermal/structural deformation.

(Supercedes Page 4.10-1 dated 29 May 1992)

IRN 106

SIs shall not generate dynamic disturbances which produce image stability error in excess of those required by the primary observing SI.

The boundaries of the field of view for each SI shall be defined by each SI contractor, in the SI coordinate system, to an accuracy of 0.5 mm.

The science observation may be interrupted for the movement of mechanisms internal to an SI which will induce HST pointing errors greater than 0.0007 arc-sec (rms). Non-primary SIs must obtain the approval of the primary SI before performing such mechanism movements. If the HST pointing error produced by the activation of a mechanism is less than 0.0007 arc-sec (rms), no approval is required.

(New Page Created by IRN 106)

4.11 Interface Connectors and Pin Assignments. IRN 100

4.11.1 Connectors. Type LJT (per OTA SCD No 679-6004) for SIs are provided by NASA as GFE and are supplied with loose contacts (10% overage) and insertion tools.

2 power receptacles, each containing 21, 16 AWG contacts:
LJTPQ00RT23-21P/453(-101) (Power Connection A)
LJTPQ00RT23-21PA/453(-102) (Power Connection B)

2 signal receptacles, each containing 21, 20 AWG contacts and 2, 16 AWG contacts:
LJTPQ00RT17-99P/453(-106) (Signal Connector A)
LJTPQ00RT17-99PA/453(-107) (Signal Connector B)

1 RG 316 U Coax Pin contact:
21-33122-563

1 test receptacle containing 55, 22 AWG contacts:
LJTPQ00RT17-35P/453(-105)

4.11.2 Pin Assignments. Each redundant power connector contains the connections as indicated in Table 4.11-1 and -2.

Each redundant signal/command connector contains the connections as indicated in Table 4.11-3 and -4.

(Supersedes Page 4.11-1 dated 29 May 1992))

IRN 106

TABLE 4.11-1
POWER CONNECTOR "A"

FUNCTION	PIN ASSIGNMENT
POWER BUS	X
POWER RETURN	W
POWER BUS	V
POWER RETURN	U
POWER BUS	T
POWER RETURN	S
POWER BUS	R
POWER RETURN	P
REMOTE INTERFACE UNIT POWER BUS	N
REMOTE INTERFACE UNIT RETURN BUS	M
REMOTE INTERFACE UNIT POWER BUS	L
REMOTE INTERFACE UNIT RETURN BUS	K
SPARE	J
SPARE	H
SPARE	G
SPARE	F
SPARE	E
SPARE	D
SPARE	C
SPARE	B
SPARE	A

IRN 100

(Supersedes Page 4.11-2 dated 29 May 1992)

IRN 106

TABLE 4.11-2
POWER CONNECTOR "B"

FUNCTION	PIN ASSIGNMENT	
		IRN 100
POWER BUS	X	
POWER RETURN	W	
POWER BUS	V	
POWER RETURN	U	
POWER BUS	T	
POWER RETURN	S	
POWER BUS	R	
POWER RETURN	p	
REMOTE INTERFACE UNIT POWER BUS	N	
REMOTE INTERFACE UNIT RETURN BUS	M	
REMOTE INTERFACE UNIT POWER BUS	L	
REMOTE INTERFACE UNIT RETURN BUS	K	IRN 117
SPARE	J	IRN 100
SPARE	H	
SPARE	G	
SPARE	F	
SPARE	E	
SPARE	D	
SPARE	C	
SPARE	B	
SPARE	A	

TABLE 4.11-3
SIGNAL/COMMAND "A" CONNECTOR

FUNCTION	PIN ASSIGNMENT
SPARE	Z
SCIENCE DATA READY TRUE	Y
SCIENCE DATA READY COMPLEMENT	X
SPARE	W
SCIENCE DATA GATE TRUE	V
SCIENCE DATE GATE COMPLEMENT	U
SCIENCE DATA CLOCK TRUE	T
SCIENCE DATA CLOCK COMPLEMENT	S
SCIENCE DATA TRUE	R
SCIENCE DATA COMPLEMENT	P
LINE START TRUE	N
LINE START COMPLEMENT	M
FRAME START TRUE	L
FRAME START COMPLEMENT	K
COMMON SHIELD FOR SI DATA LINES	J
SIGNAL GROUND	H
SUPERVISORY BUS "A" TRUE	G
SUPERVISORY BUS "A" COMPLEMENT	F
SUPERVISORY BUS "A" SHIELD	E
REPLY BUS "A" TRUE	D
REPLY BUS "A" COMPLEMENT	C
REPLY BUS "A" SHIELD	B
SPARE	A

IRN 100

(Supersedes Page 4.11-4 dated 29 May 1992)

IRN 106

TABLE 4.11-4
SIGNAL/COMMAND "B" CONNECTOR

FUNCTION	PIN ASSIGNMENT
SPARE	Z
SCIENCE DATA READY TRUE	Y
SCIENCE DATA READY COMPLEMENT	X
SPARE	W
SCIENCE DATA GATE TRUE	V
SCIENCE DATE GATE COMPLEMENT	U
SCIENCE DATA CLOCK TRUE	T
SCIENCE DATA CLOCK COMPLEMENT	S
SCIENCE DATA TRUE	R
SCIENCE DATA COMPLEMENT	P
LINE START TRUE	N
LINE START COMPLEMENT	M
FRAME START TRUE	L
FRAME START COMPLEMENT	K
COMMON SHIELD FOR SI DATA LINES	J
SIGNAL GROUND	H
SUPERVISORY BUS "B" TRUE	G
SUPERVISORY BUS "B" COMPLEMENT	F
SUPERVISORY BUS "B" SHIELD	E
REPLY BUS "B" TRUE	D
REPLY BUS "B" COMPLEMENT	C
REPLY BUS "B" SHIELD	B
SPARE	A

IRN 100

(NEW PAGE CREATED BY IRN 106)

IRN 106

4.12 SI Math Models.

4.12.1 Structural Math Models. The SI structural models provided by SI Contractors to the HST Project shall be simplified representations of the detailed models used by SI Contractors in the design, development and performance analysis of the instruments. IRN 100

The first lateral and torsion modes determined from these simplified models shall agree within ± 3 %, with those predicted by the more detailed models. Agreement is determined by comparing natural frequency and modal effective weight properties.

The simplified models shall be a reduced model using, for example, NASTRAN ASET reduction technique. The simplified model shall consist of up to 900 degrees of freedom and may be in the form of either a mass and a stiffness matrix (in double precision) or a Craig-Bampton model with appropriate LTM. In either case, the model must be able to predict motion of major mass items, motors and points of mechanical disturbance, and all elements in the optical path(s). If the Craig-Bampton form is used, modes to 200 Hz must be included. Data shall be transmitted by magnetic tape (9-track, 1600 BPI, fixed record format, logical record length = 80, blocksize = 800).

In addition, the output data from the more detailed model shall be supplied for comparison to the simplified model data.

4.12.2 Thermal Math Models. The SI thermal models provided by SI Contractors to the HST Project shall be simplified representations of the detailed models used by SI Contractors in the design, development and performance analysis of the instruments.

The simplified thermal models shall be in SINDA format and shall consist of a maximum of 55 nodes including no more than 40 surface nodes plus one node for each of the 3 FPS attachment point interfaces. The models shall be transmitted in the form of a diskette with a listing of the bulk data, a nodal schematic and a sample analysis output. Temperature dependent functions such as heaters, louvers, etc., shall be clearly indicated. The model represents all the power modes of section 4.6.1.1.4; Operational, and hold as a minimum.

In addition, the output data from the more detailed model shall be supplied for comparison to the simplified model data.

(NEW PAGE CREATED BY IRN 100)

	PAGE	
10. APPENDIX	10.1-1	
10.1 FOS Deviations and waivers. The Faint Object Spectrograph (FOS), STE-07, is relieved from the requirements of this ICD to the extent shown on the NASA approved Martin Marietta Aerospace deviations and waivers listed below and included on the following pages.	10.1-1	
10.1.1 Power Connector and Ground Strap, Deviation No. FOS-003.	10.1-2	
10.1.2 Deviation to SI Envelope, Deviation No. FOS-004.	10.1-4	
10.1.3 Generalized Mass Deviation, Deviation No. FOS-007.	10.1-6	
10.1.4 Heat Pipe Deviation, Deviation No. FOS-008.	10.1-7	
10.1.5 Magnetic Field Limit, Deviation No. FOS-010R1	10.1-8	
10.1.6 Delete P_2 Interface Hardware, Deviation No. FOS-019	10.1-11	
10.1.7 FOS Cold Hold Power Requirement, Deviation No. FOS-022	10.1-12	IRN 65
10.1.8 FOS Center of Gravity Position, Deviation No. FOS-024	10.1-13	IRN 66
10.1.9 FOS Generalized Mass vs SI Mode Frequency, Deviation No. FOS-007	10.1-14	IRN 72
10.1.10 Incorporate In-Plane Heat Pipes Configuration, Deviation No. FOS-004A	10.1-16	IRN 75
10.1.11 RE02 Exceedance, Deviation No. FOS-029	10.1-18	IRN 80
10.1.12 FOS Aperture Position, Deviation No. FOS-023C	10.1-21	IRN 86

(Supersedes pg. 10.1-1 dated 27 September 1985)

ST-ICD-02E
27 August 1984
Admin. Change

DEVIATION APPROVAL REQUEST

1. FOR: [XX] DEVIATION [ ] SUMMARY OF MINOR NONCONFORMANCES

FROM CONTRACTOR:	3. CONTRACT NUMBER:	4. REQUEST NUMBER:
Martin Marietta Aerospace	E07121-3143	FOS-003

5. NOMENCLATURE:	6. NUMBER:	7. REVISION:	8. DATE:
Faint Object Spectrograph		Original	Dec. 18, 1979

9. NONCONFORMANCE:	10. MRB ACTION NO.:	11. SERIAL NUMBER(S):	12. LOT NUMBER:	13. QUANTITY:
[XX] MINOR [ ] MAJOR				

14. SUPPLIER OR SUBCONTRACTOR (GIVE NAME AND ADDRESS):

Martin Marietta Aerospace

15. SPECIFIED REQUIREMENTS:

1) ICD-02, Axial SI to OTA & SSM, 11/30/79
   a. Fig. 3.3-1 Static Envelope: 15.00 in. minimum Connector Surface dimension.
   b. Fig. 3.3-17 Connector & Purge Fitting Arrangement Details: 15.00 in. min. (Ref): 10.25 in. to Purge Fitting, 10.50 in. to Ground Strap
2) MSFC-STD-512A: 1.0 in. clearance envelope around connectors.

16. DESCRIPTION OF DEPARTURE FROM REQUIREMENTS:

1) ICD-02
   a. 13.75 in. minimum Connector Surface dimension
   b. 13.75 in. minimum (Ref): 9.50 in. to Purge Fitting: 9.50 in. to Ground Strap
2) 3/8 in. overlap of power connector and purge fitting or ground strap clearance envelopes.

17. REASON FOR REQUEST AND/OR CORRECTIVE ACTION TAKEN:

Avoid weight and cost impacts.

18. REMARKS:

Adequate service loops exist in the purge line and ground strap to reach the proposed locations. The power connections and purge or ground strap connections would not be performed simultaneously-the clearance envelope overlap is, therefore, not a problem. See attached sketch. This responds to 11/1/79 IFWG Action Item A7 & has been coordinated with P-E & LMSC.

19. CONTRACTOR CERTIFICATION: THE CONTRACTOR HEREBY CERTIFIES THAT THE ABOVE DESCRIBED DEVIATION IS A DEPARTURE FROM THE CONTRACTUAL REQUIREMENTS IN THE QUANTITIES AND/OR CONDITIONS AS STATED ABOVE.

[ ] _____ COST ADJUSTMENT (EXPLAIN)
[XX] NO COST ADJUSTMENT

Program Manager	/s/M.H. Thorson	12/20/79
TITLE	SIGNATURE OF AUTHORIZED REPRESENTATIVE	DATE

20. GOVERNMENT QUALITY ASSURANCE REPRESENTATIVE COMMENTS:

Concurrence: /s/Charles. L. Ross

Retyped by MSFC for clarity

TITLE SIGNATURE DATE

21. MSFC REVIEW:

ORGANIZATION SYMBOL	REPRESENTATIVE	CONCURRENCE	NON-CONCURRENCE	DATE

22. CONTRACTING OFFICER'S REPRESENTATIVE OR OTHER DULY DELEGATED AUTHORITY:

[ ] DISAPPROVAL (RECOMMENDED)
[ ] APPROVAL (RECOMMENDED)(WITH) (WITHOUT) PRICE ADJUSTMENT. $ _____

SIGNATURE DATE

23. CONTRACTING OFFICER:

[ ] APPROVED
[ ] DISAPPROVED
[ ] SUBJECT TO CONDITIONS STATED ON MSFC FORM _____-1.

(Supersedes pg. 10.1-2 dated 29 June 1984)

SIGNATURE DATE

MSFC - Form 341 (Rev. May 1969)

FOS PURGE FITTING & GROUND STRAP LOCATIONS

ST-ICD-Q2E
29 June 1984

A. ICD-02 REQUIREMENTS

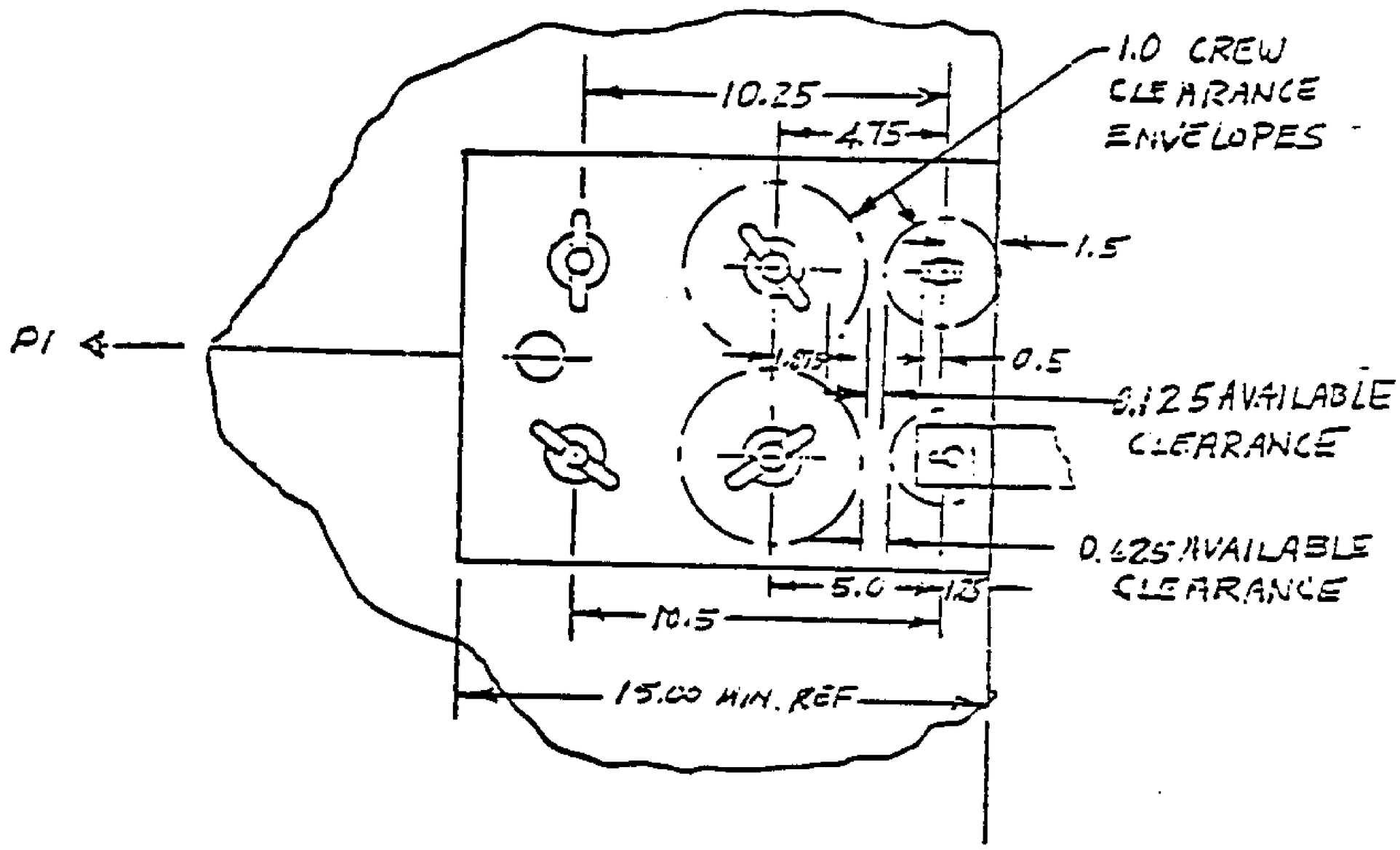

B. FOS DEVIATION

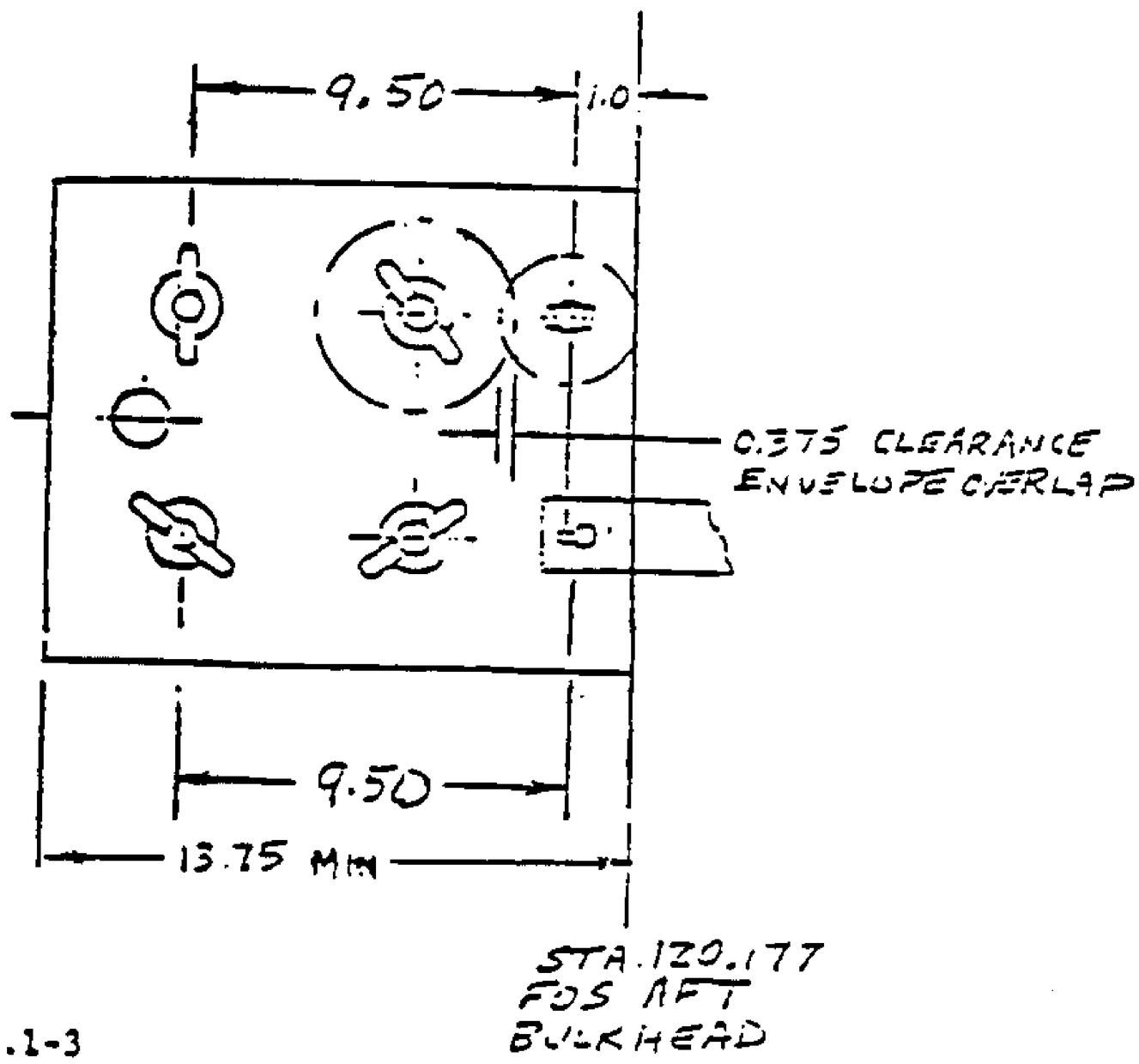

DEVIATION APPROVAL REQUEST

1. FOR: [XX] DEVIATION [ ] SUMMARY OF MINOR NONCONFORMANCES

FROM CONTRACTOR:	3. CONTRACT NUMBER:	4. REQUEST NUMBER:
Martin Marietta Aerospace	E07121-3143	FOS-004

5. NOMENCLATURE:	6. NUMBER:	7. REVISION:	8. DATE:
Faint Object Spectrograph		Original	Dec. 20, 1979

9. NONCONFORMANCE:	10. MRB ACTION NO.:	11. SERIAL NUMBER(S):	12. LOT NUMBER:	13. QUANTITY:
[XX] MINOR [ ] MAJOR				

14. SUPPLIER OR SUBCONTRACTOR (GIVE NAME AND ADDRESS):

Martin Marietta Aerospace

15. SPECIFIED REQUIREMENTS:

1) ICD-02, Axial SI to OTA & SSM, 11/30/79
   a. Fig. 3.3-2 Dynamic Envelope: Defines Static envelope at 29.50 max from point "A" and dynamic envelope 0.25 in. beyond that.
   b. Fig. 3.3-15 SI Handle and Minimum Clearance: Defines the clearance envelope around handles as 2.25 in. underneath by 8.0 in. wide.

16. DESCRIPTION OF DEPARTURE FROM REQUIREMENTS:

See Sheet 2

1) Heat Pipe condenser and saddle exceed static and dynamic envelopes in very localized regions. The radiator section between the handles slightly exceeds the static envelope.
2) Heat pipe bend and end protrude slightly into handle clearance envelope.

17. REASON FOR REQUEST AND/OR CORRECTIVE ACTION TAKEN:

Incorporate in-plane heat pipe configurations.

18. REMARKS:

Local static and dynamic envelope violations produce no known interferences. The handle clearance envelope violation is very localized and should present no problem in grasping the handle. Shortening the condenser would degrade performance & result in increased radiator height. Envelope deviations for condensers paralleling P1 had previously been coordinated with the IFWG.

19. CONTRACTOR CERTIFICATION: THE CONTRACTOR HEREBY CERTIFIES THAT THE ABOVE DESCRIBED DEVIATION IS A DEPARTURE FROM THE CONTRACTUAL REQUIREMENTS IN THE QUANTITIES AND/OR CONDITIONS AS STATED ABOVE.

[ ] _____ COST ADJUSTMENT (EXPLAIN)

[XX] NO COST ADJUSTMENT

Program Manager	/s/M.H. Thorson	1/3/80
TITLE	SIGNATURE OF AUTHORIZED REPRESENTATIVE	DATE

20. GOVERNMENT QUALITY ASSURANCE REPRESENTATIVE COMMENTS:

Concurrence: /s/Charles L. Ross

Retyped by MSFC for clarity

TITLE SIGNATURE DATE

21. MSFC REVIEW:

ORGANIZATION SYMBOL	REPRESENTATIVE	CONCURRENCE	NON-CONCURRENCE	DATE

22. CONTRACTING OFFICER'S REPRESENTATIVE OR OTHER DULY DELEGATED AUTHORITY:

[ ] DISAPPROVAL (RECOMMENDED)
[ ] APPROVAL (RECOMMENDED)(WITH) (WITHOUT) PRICE ADJUSTMENT. $ _____

SIGNATURE DATE

23. CONTRACTING OFFICER:

[ ] APPROVED
[ ] DISAPPROVED
[ ] SUBJECT TO CONDITIONS STATED ON MSFC FORM _____-1.

(Supersedes pg. 10.1-4 dated 29 June 1984)

SIGNATURE DATE

MSFC - Form 847 (Rev. May 1969)

FOS HEAT PIPE CONDENSER ENVELOPES

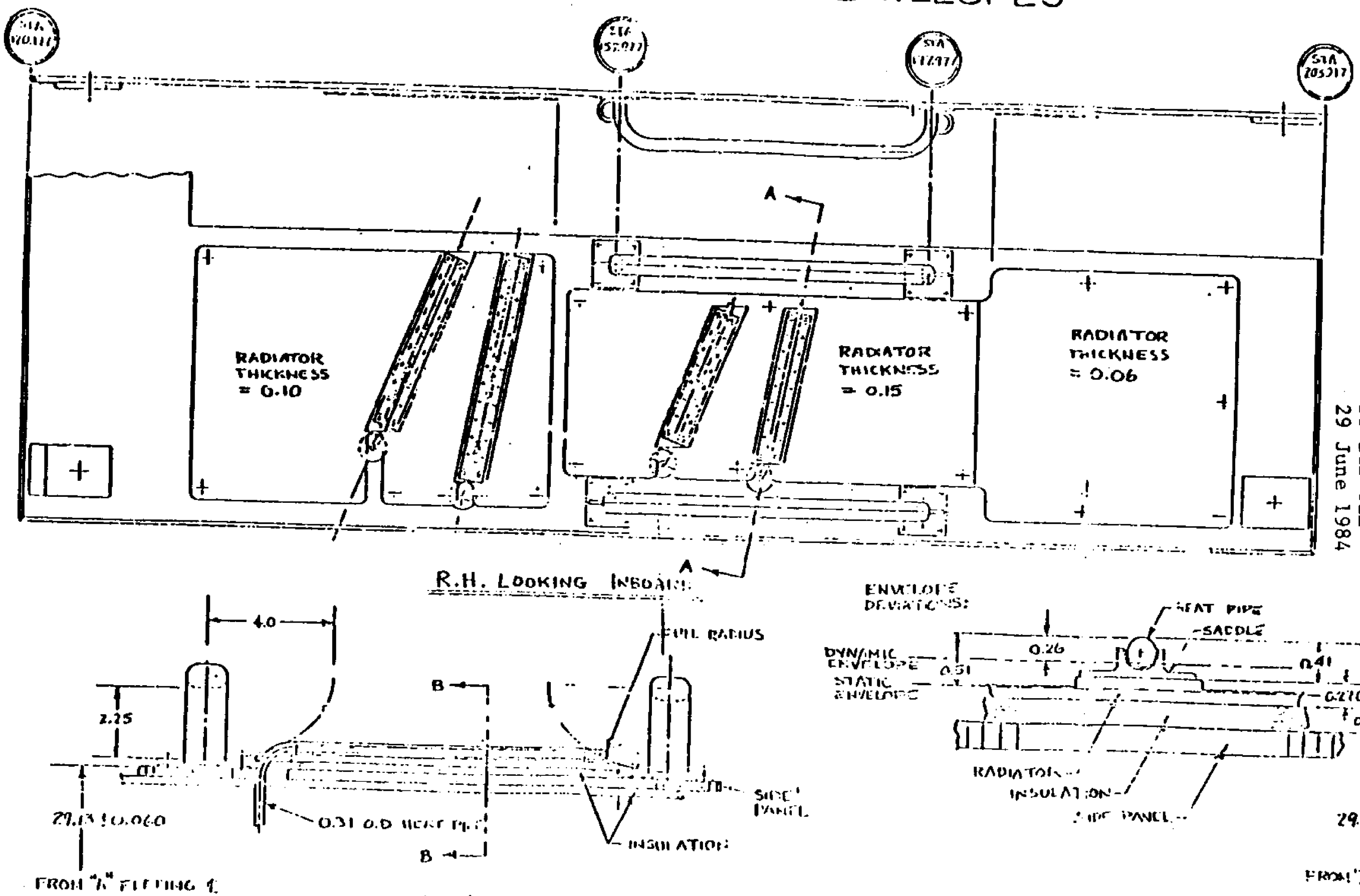

Insert new pg 10.1-5

DEVIATION APPROVAL REQUEST

1. FOR: [XX] DEVIATION [ ] SUMMARY OF MINOR NONCONFORMANCES

FROM CONTRACTOR: Martin Marietta Aerospace

3. CONTRACT NUMBER: E07121-3143

4. REQUEST NUMBER: FOS-007

5. NOMENCLATURE: Faint Object Spectrograph

6. NUMBER:

7. REVISION: A

8. DATE: 23 January 1980

9. NONCONFORMANCE: [XX] MINOR [ ] MAJOR

10. MRB ACTION NO.:

11. SERIAL NUMBER(S):

12. LOT NUMBER:

13. QUANTITY:

14. SUPPLIER OR SUBCONTRACTOR (GIVE NAME AND ADDRESS): Martin Marietta Aerospace

15. SPECIFIED REQUIREMENTS:
ICD-02, Axial SI to OTA & SSM , 11/30/79

Figure 3.5-3 Mode Frequency vs Resolved Modal Mass: The SI Generalized Mass is required to be below the curve at all frequencies.

16. DESCRIPTION OF DEPARTURE FROM REQUIREMENTS:
One resonance results in a generalized mass that exceeds the curve; at 40Hz the generalized mass is 294 lb.

17. REASON FOR REQUEST AND/OR CORRECTIVE ACTION TAKEN:
Analyses have shown that there is no change that can eliminate this exceedance without very significant optical bench redesign and the attendant cost impact.

18. REMARKS:
OTA dynamic analyses have shown that this FOS resonance will not cause a problem to the OTA. The minutes of the 29 January 1980 IFWG document Perkin-Elmer's acceptance of this deviation based on the FOS structural model received last summer.

19. CONTRACTOR CERTIFICATION: THE CONTRACTOR HEREBY CERTIFIES THAT THE ABOVE DESCRIBED DEVIATION IS A DEPARTURE FROM THE CONTRACTUAL REQUIREMENTS IN THE QUANTITIES AND/OR CONDITIONS AS STATED ABOVE.

[ ] _____ COST ADJUSTMENT (EXPLAIN)

[XX] NO COST ADJUSTMENT

Program Manager (TITLE) /s/M.H. Thorson (SIGNATURE OF AUTHORIZED REPRESENTATIVE) 1/23/80 (DATE)

20. GOVERNMENT QUALITY ASSURANCE REPRESENTATIVE COMMENTS:
Concurrence: /s/Charles L. Ross

Retyped by MSFC for clarity

TITLE SIGNATURE DATE

21. MSFC REVIEW:

ORGANIZATION SYMBOL	REPRESENTATIVE	CONCURRENCE	NON-CONCURRENCE	DATE

22. CONTRACTING OFFICER'S REPRESENTATIVE OR OTHER DULY DELEGATED AUTHORITY:

[ ] DISAPPROVAL (RECOMMENDED)

[ ] APPROVAL (RECOMMENDED)(WITH) (WITHOUT) PRICE ADJUSTMENT. $ _____

SIGNATURE DATE

23. CONTRACTING OFFICER:

[ ] APPROVED

[ ] DISAPPROVED

[ ] SUBJECT TO CONDITIONS STATED ON MSFC FORM _____-1.

(Supersedes pg. 10.1-6 dated 29 June 1984)

SIGNATURE DATE

DEVIATION APPROVAL REQUEST

1. FOR: [XX] DEVIATION [ ] SUMMARY OF MINOR NONCONFORMANCES

FROM CONTRACTOR:	3. CONTRACT NUMBER:	4. REQUEST NUMBER:
Martin Marietta Aerospace	E07121-3143	FOS-008

5. NOMENCLATURE:	6. NUMBER:	7. REVISION:	8. DATE:
Faint Object Spectrograph		Basic	7 April 1980

9. NONCONFORMANCE:	10. MRB ACTION NO.:	11. SERIAL NUMBER(S):	12. LOT NUMBER:	13. QUANTITY:
[ ] MINOR [XX] MAJOR				

14. SUPPLIER OR SUBCONTRACTOR (GIVE NAME AND ADDRESS):

Martin Marietta Aerospace

15. SPECIFIED REQUIREMENTS:

ICD-02, Axial SI to OTA and SSM, 28 March 80:

Paragraph 3.2.2.1 requires:

"Each SI is designed to be capable of being mounted in any of the four quadrants as shown in Figure 3.2-1 and meets all of the interfaces as defined in this document."

16. DESCRIPTION OF DEPARTURE FROM REQUIREMENTS:

The FOS heat pipe radiators must view either +V2 or -V2 sinks to achieve necessary photocathode temperatures. The heat pipes are designed to go to radiators on the surface normal to P3 which is compatible with positions 2 and 4, but not positions 1 and 3.

17. REASON FOR REQUEST AND/OR CORRECTIVE ACTION TAKEN:

Design and test of a second heat pipe configuration would incur substantial costs.

18. REMARKS:

FOS and SSM thermal analyses have located FOS in Position 2. With positions assigned for the first flight, there is no need at this time to incur the costs of designing and testing a second heat pipe configuration.

19. CONTRACTOR CERTIFICATION: THE CONTRACTOR HEREBY CERTIFIES THAT THE ABOVE DESCRIBED DEVIATION IS A DEPARTURE FROM THE CONTRACTUAL REQUIREMENTS IN THE QUANTITIES AND/OR CONDITIONS AS STATED ABOVE.

[ ] _____ COST ADJUSTMENT (EXPLAIN)

[XX] NO COST ADJUSTMENT

Program Director	/s/ M.H. Thorson	4/7/80
TITLE	SIGNATURE OF AUTHORIZED REPRESENTATIVE	DATE

20. GOVERNMENT QUALITY ASSURANCE REPRESENTATIVE COMMENTS:

Concurrence: /s/Charles L. Ross

Retyped by MSFC for clarity

TITLE SIGNATURE DATE

21. MSFC REVIEW:

ORGANIZATION SYMBOL	REPRESENTATIVE	CONCURRENCE	NON-CONCURRENCE	DATE

22. CONTRACTING OFFICER'S REPRESENTATIVE OR OTHER DULY DELEGATED AUTHORITY:

[ ] DISAPPROVAL (RECOMMENDED)

[ ] APPROVAL (RECOMMENDED)(WITH) (WITHOUT) PRICE ADJUSTMENT. $ _____

SIGNATURE DATE

23. CONTRACTING OFFICER:

[ ] APPROVED

[ ] DISAPPROVED

[ ] SUBJECT TO CONDITIONS STATED ON MSFC FORM _____-1.

(Supersedes pg. 10.1-7 dated 29 June 1984)

SIGNATURE DATE

MSFC - Form 847 (Rev. May 1969)

ST-ICD-02E
27 August 1984
Admin. Change

DEVIATION APPROVAL REQUEST

1. FOR: [XX] DEVIATION [ ] SUMMARY OF MINOR NONCONFORMANCES

2. FROM CONTRACTOR:	3. CONTRACT NUMBER:	4. REQUEST NUMBER:
Martin Marietta Aerospace	E07121-3143	FOS-010R1

5. NOMENCLATURE:	6. NUMBER:	7. REVISION:	8. DATE:
Faint Object Spectrograph		Original	June 30, 1980

9. NONCONFORMANCE:	10. MRB ACTION NO.:	11. SERIAL NUMBER(S):	12. LOT NUMBER:	13. QUANTITY:
[ ] MINOR [XX] MAJOR				

14. SUPPLIER OR SUBCONTRACTOR (GIVE NAME AND ADDRESS):

Martin Marietta Aerospace

15. SPECIFIED REQUIREMENTS:
ICD-02, Axial SI to OTA & SSM, 10 April 1980 Paragraph 3.6.2.2 limits the SI produced magnetic field at the SI envelope to no more than 0.8 gauss.

16. DESCRIPTION OF DEPARTURE FROM REQUIREMENTS:
The FOS magnetic field exceeds the 0.8 gauss limit in localized areas adjacent to the detector, as shown in the attached Figures, and may slightly exceed the limit adjacent to the Invar joints of the optical bench (~ 1.2 gauss).

17. REASON FOR REQUEST AND/OR CORRECTIVE ACTION TAKEN:
Shielding of the Detector Permanent Magnet Focus Assembly has been improved as much as is practical and cost effective. The remaining exceedance is quite localized. The Invar joints are required to balance thermal expansion with the graphite epoxy bench members.

18. REMARKS:
Data from the development PMFA (~10% higher dipole moment than the current design) were evaluated by LMSC with no indication of an interface problem. The exceedance was also discussed at the April 80 IFWG with no interface problem identified.

19. CONTRACTOR CERTIFICATION: THE CONTRACTOR HEREBY CERTIFIES THAT THE ABOVE DESCRIBED DEVIATION IS A DEPARTURE FROM THE CONTRACTUAL REQUIREMENTS IN THE QUANTITIES AND/OR CONDITIONS AS STATED ABOVE.

[ ] _____ COST ADJUSTMENT (EXPLAIN)
[XX] NO COST ADJUSTMENT

Program Director	/s/ M. H. Thorson	6/30/80
TITLE	SIGNATURE OF AUTHORIZED REPRESENTATIVE	DATE

20. GOVERNMENT QUALITY ASSURANCE REPRESENTATIVE COMMENTS:
Concurrence: /s/Charles L. Ross

Retyped by MSFC for clarity

TITLE SIGNATURE DATE

21. MSFC REVIEW:

ORGANIZATION SYMBOL	REPRESENTATIVE	CONCURRENCE	NON-CONCURRENCE	DATE

22. CONTRACTING OFFICER'S REPRESENTATIVE OR OTHER DULY DELEGATED AUTHORITY:

[ ] DISAPPROVAL (RECOMMENDED)
[ ] APPROVAL (RECOMMENDED)(WITH) (WITHOUT) PRICE ADJUSTMENT. $ _____

SIGNATURE DATE

23. CONTRACTING OFFICER:

[ ] APPROVED
[ ] DISAPPROVED
[ ] SUBJECT TO CONDITIONS STATED ON MSFC FORM _____-1.

(Supersedes pg. 10.1-8 date 29 June 1984)

SIGNATURE DATE

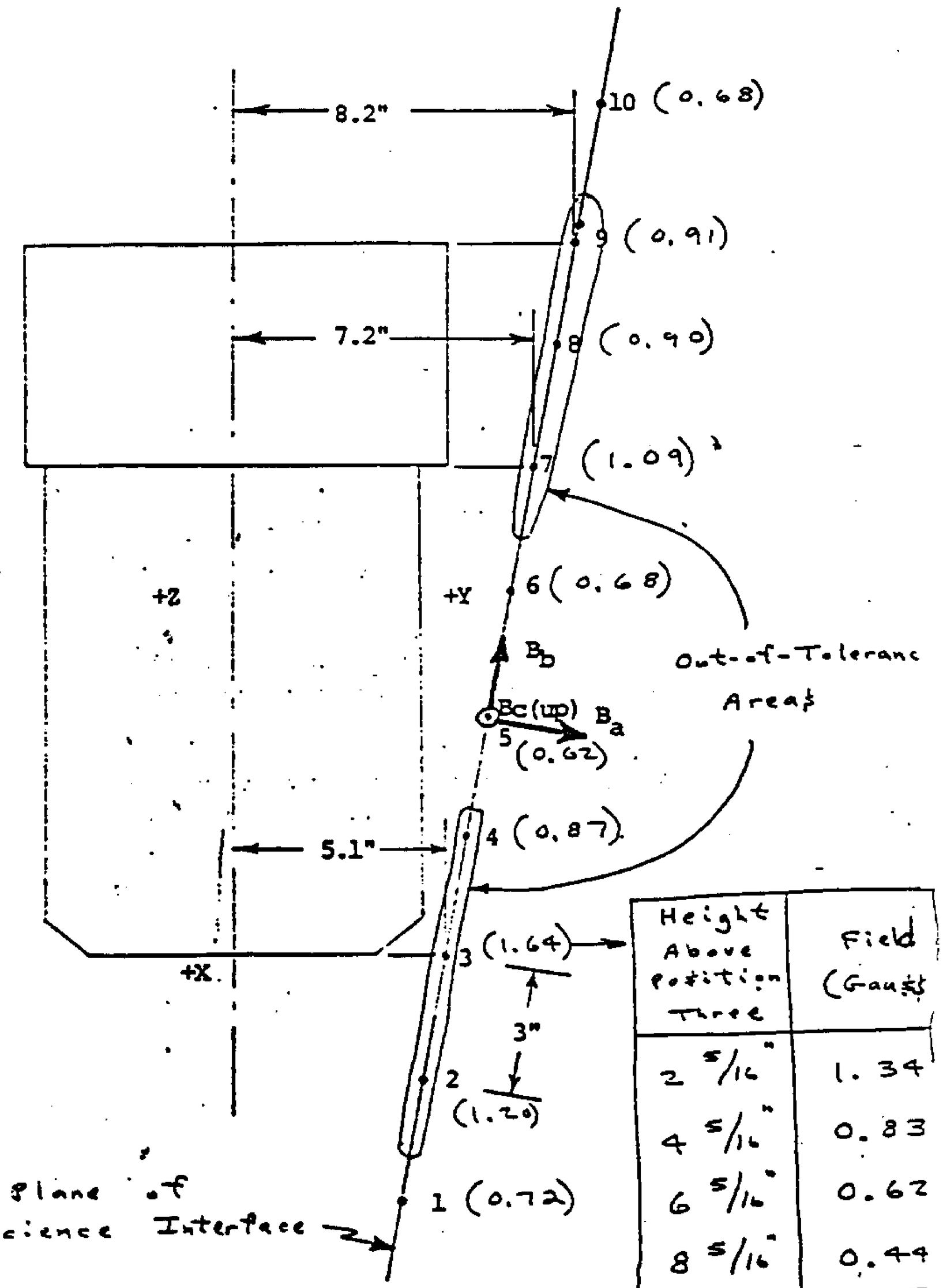

Height Above Position Three	Field (Gauss)
2 5/16"	1.34
4 5/16"	0.83
6 5/16"	0.62
8 5/16"	0.44

Figure 4-4 SI Interface
Largest Field Readings
(Remanent - Plus - Induced)

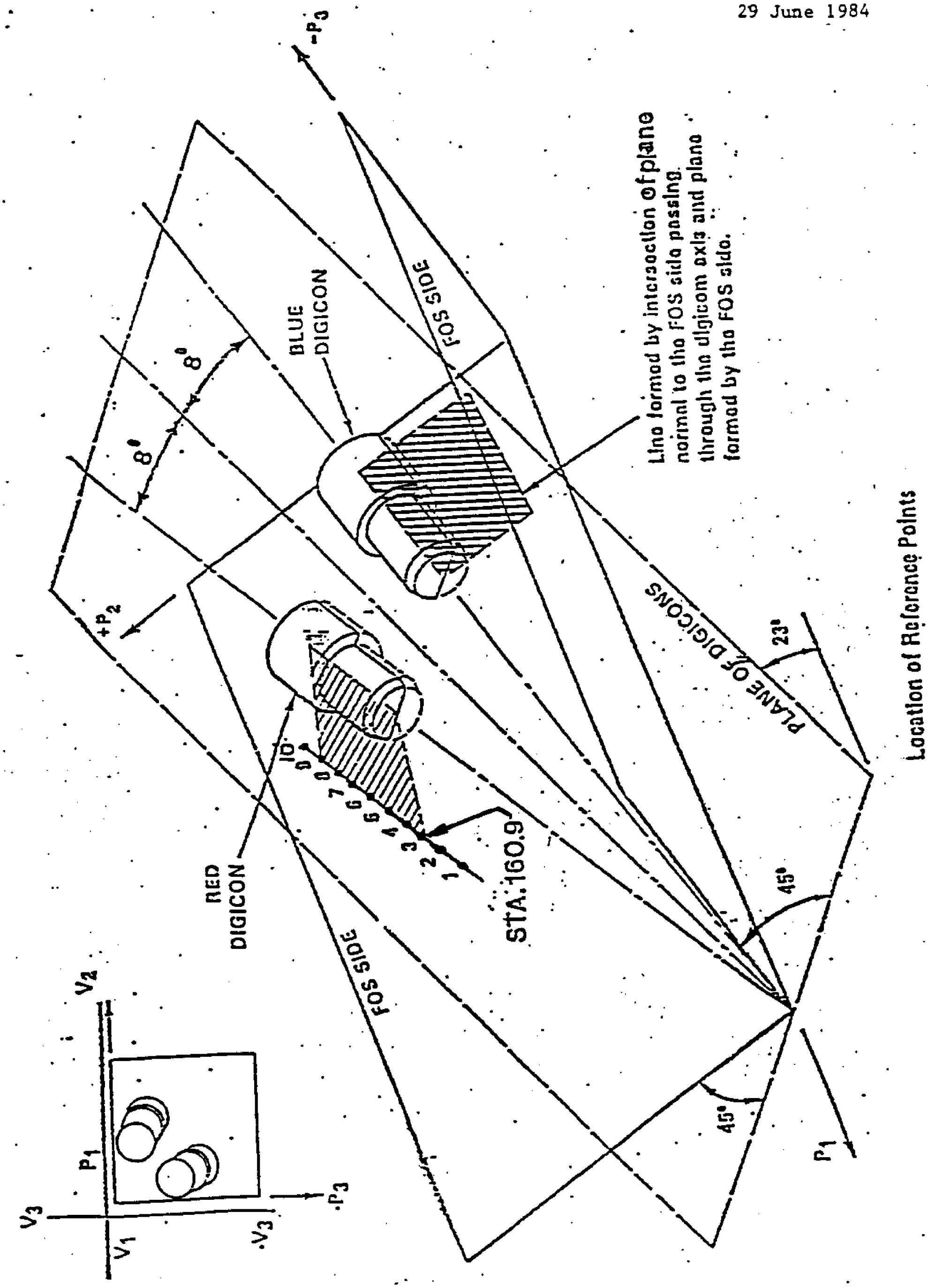
$-P_3$
BLUE DIGICON
FOS SIDE
8°
8°
Line formed by intersection of plane normal to the FOS side passing through the digicon axis and plane formed by the FOS side.
$+P_2$
PLANE OF DIGICONS
23°
Location of Reference Points
PIRN 21,26
RED DIGICON
ID
0
0
7
6
5
4
3
2
1
STA. 160.9
45°
FOS SIDE
45°
P_1
V_2
P_1
V_3
V_1
V_3
P_3

DEVIATION APPROVAL REQUEST

1. FOR: [XX] DEVIATION [ ] SUMMARY OF MINOR NONCONFORMANCES

FROM CONTRACTOR:	3. CONTRACT NUMBER:	4. REQUEST NUMBER:
Martin Marietta Aerospace	E07121-3143	FOS-019

5. NOMENCLATURE:	6. NUMBER:	7. REVISION:	8. DATE:
Faint Object Spectrograph Deletion of P2(-V3) Interface Hardware		Basic	13 Aug 1981

9. NONCONFORMANCE:	10. MRB ACTION NO.:	11. SERIAL NUMBER(S):	12. LOT NUMBER:	13. QUANTITY:
[XX] MINOR [ ] MAJOR				

14. SUPPLIER OR SUBCONTRACTOR (GIVE NAME AND ADDRESS):

Martin Marietta Aerospace

15. SPECIFIED REQUIREMENTS:

ST-ICD-02C
Paragraph 3.2.2.1 Requires:
"Each SI is designed to be capable of being mounted in any of the four quadrants as shown in Figure 3.2-1 and meets all of the interfaces as defined in this document."

16. DESCRIPTION OF DEPARTURE FROM REQUIREMENTS:

FOS deletes the guide rails, crew hand-holds and GSE interface points and support provisions for these items from the surface normal to P2(-V3).

17. REASON FOR REQUEST AND/OR CORRECTIVE ACTION TAKEN:

The FOS is assigned to Position 2 making guide rails, crew handholds and GSE Interface fittings on the P2(-V3) side unnecessary.

18. REMARKS:

This deviation avoids the weight of the guide rails, GSE interface fittings and structural provisions for mounting these items and the crew handholds.

19. CONTRACTOR CERTIFICATION: THE CONTRACTOR HEREBY CERTIFIES THAT THE ABOVE DESCRIBED DEVIATION IS A DEPARTURE FROM THE CONTRACTUAL REQUIREMENTS IN THE QUANTITIES AND/OR CONDITIONS AS STATED ABOVE.

[ ] _____ COST ADJUSTMENT (EXPLAIN)
[XX] NO COST ADJUSTMENT

Program Director (TITLE) /s/ (SIGNATURE OF AUTHORIZED REPRESENTATIVE) 8/17/81 (DATE)

20. GOVERNMENT QUALITY ASSURANCE REPRESENTATIVE COMMENTS:

Concurrence: /s/Charles L. Ross

Retyped by MSFC for clarity

(TITLE) (SIGNATURE) (DATE)

21. MSFC REVIEW:

ORGANIZATION SYMBOL	REPRESENTATIVE	CONCURRENCE	NON-CONCURRENCE	DATE

22. CONTRACTING OFFICER'S REPRESENTATIVE OR OTHER DULY DELEGATED AUTHORITY:

[ ] DISAPPROVAL (RECOMMENDED)
[ ] APPROVAL (RECOMMENDED)(WITH) (WITHOUT) PRICE ADJUSTMENT. $ _____

(SIGNATURE) (DATE)

23. CONTRACTING OFFICER:

[ ] APPROVED
[ ] DISAPPROVED
[ ] SUBJECT TO CONDITIONS STATED ON MSFC FORM _____-1.

(Supersedes pg. 10.1-11 date 29 June 1984)

(SIGNATURE) (DATE)

DEVIATION APPROVAL REQUEST

1. FOR: [XX] DEVIATION [ ] SUMMARY OF MINOR NONCONFORMANCES

2. FROM CONTRACTOR: Martin Marietta Corporation

3. CONTRACT NUMBER: E07121-3143

4. REQUEST NUMBER: FOS-022

5. NOMENCLATURE: FOS Cold Hold Power Requirement

6. NUMBER:

7. REVISION: Original

8. DATE: 10-10-83

9. NONCONFORMANCE: [ ] MINOR [ ] MAJOR

10. MRB ACTION NO.:

11. SERIAL NUMBER(S):

12. LOT NUMBER:

13. QUANTITY:

14. SUPPLIER OR SUBCONTRACTOR (GIVE NAME AND ADDRESS):

15. SPECIFIED REQUIREMENTS:

ST-ICD-02D, 22 December 1982, para. 3.6.1.1.4.2 states: hold Power mode "not to exceed 58 Watts/ SI average power per orbit including RM."

16. DESCRIPTION OF DEPARTURE FROM REQUIREMENTS:

Results of Thermal vacuum testing indicate a power of 64 W during cold hold, or 6 W over ICD requirement

17. REASON FOR REQUEST AND/OR CORRECTIVE ACTION TAKEN:

Modification of hardware would incur substantial additional cost.

18. REMARKS:

UCSD Approval: /s/ L.K. Randall, FOS Program Manager

19. CONTRACTOR CERTIFICATION: THE CONTRACTOR HEREBY CERTIFIES THAT THE ABOVE DESCRIBED DEVIATION IS A DEPARTURE FROM THE CONTRACTUAL REQUIREMENTS IN THE QUANTITIES AND/OR CONDITIONS AS STATED ABOVE.

[ ] _____ COST ADJUSTMENT (EXPLAIN)

[XX] NO COST ADJUSTMENT

TITLE _____ SIGNATURE OF AUTHORIZED REPRESENTATIVE _____ DATE 10/20/83

20. GOVERNMENT QUALITY ASSURANCE REPRESENTATIVE COMMENTS:

Retyped by MSFC for clarity

TITLE _____ SIGNATURE _____ DATE _____

21. MSFC REVIEW:

ORGANIZATION SYMBOL	REPRESENTATIVE	CONCURRENCE	NON-CONCURRENCE	DATE

22. CONTRACTING OFFICER'S REPRESENTATIVE OR OTHER DULY DELEGATED AUTHORITY:

[ ] DISAPPROVAL (RECOMMENDED)

[ ] APPROVAL (RECOMMENDED)(WITH) (WITHOUT) PRICE ADJUSTMENT. $ _____

SIGNATURE _____ DATE _____

23. CONTRACTING OFFICER:

[ ] APPROVED

[ ] DISAPPROVED

[ ] SUBJECT TO CONDITIONS STATED ON MSFC FORM _____-1.

(New Page created by IRN 65)

SIGNATURE _____ DATE _____

MSFC - Form 847 (Rev. May 1969)

DEVIATION APPROVAL REQUEST

1. FOR: [XX] DEVIATION [ ] SUMMARY OF MINOR NONCONFORMANCES

2. FROM CONTRACTOR: Martin Marietta Corporation

3. CONTRACT NUMBER: E07121-3143

4. REQUEST NUMBER: FOS-024

5. NOMENCLATURE: FOS CG Position

6. NUMBER:

7. REVISION: Original

8. DATE: 10-20-83

9. NONCONFORMANCE: [XX] MINOR [ ] MAJOR

10. MRB ACTION NO.:

11. SERIAL NUMBER(S):

12. LOT NUMBER:

13. QUANTITY:

14. SUPPLIER OR SUBCONTRACTOR (GIVE NAME AND ADDRESS):

15. SPECIFIED REQUIREMENTS:
ST-ICD-02D, 22 December 1982:
Paragraph 3.5.3.2 Center of Gravity requires:

P1 CG = 30.00 to -42.80 inches

16. DESCRIPTION OF DEPARTURE FROM REQUIREMENTS:
From measurements of the assembled FOS corrected for tares:

P1 CG without GFE = -43.2 inches
P1 GC with GFE = -43.0 inches

17. REASON FOR REQUEST AND/OR CORRECTIVE ACTION TAKEN:
Movement of any items that would bring the CG into spec is impractical. Addition of ballast (16 lbs. on the forward bulkhead), although FOS has the weight margin, appears to be unwarranted.

18. REMARKS:

UCSD Approval: /s/L.K. Randall, Program Manager

19. CONTRACTOR CERTIFICATION: THE CONTRACTOR HEREBY CERTIFIES THAT THE ABOVE DESCRIBED DEVIATION IS A DEPARTURE FROM THE CONTRACTUAL REQUIREMENTS IN THE QUANTITIES AND/OR CONDITIONS AS STATED ABOVE.

[ ] _____ COST ADJUSTMENT (EXPLAIN)
[XX] NO COST ADJUSTMENT

FOS Program Manager (TITLE) /s/ (SIGNATURE OF AUTHORIZED REPRESENTATIVE) 10/20/83 (DATE)

20. GOVERNMENT QUALITY ASSURANCE REPRESENTATIVE COMMENTS:

Retyped by MSFC for clarity

TITLE SIGNATURE DATE

21. MSFC REVIEW:

ORGANIZATION SYMBOL	REPRESENTATIVE	CONCURRENCE	NON-CONCURRENCE	DATE

22. CONTRACTING OFFICER'S REPRESENTATIVE OR OTHER DULY DELEGATED AUTHORITY:

[ ] DISAPPROVAL (RECOMMENDED)
[ ] APPROVAL (RECOMMENDED)(WITH) (WITHOUT) PRICE ADJUSTMENT. $ _____

SIGNATURE DATE

23. CONTRACTING OFFICER:

[ ] APPROVED
[ ] DISAPPROVED
[ ] SUBJECT TO CONDITIONS STATED ON MSFC FORM _____-1.

(New Page created by IRN 66)

SIGNATURE DATE

MSFC - Form 847 (Rev. May 1969)

DEVIATION APPROVAL REQUEST

1. FOR: [XX] DEVIATION [ ] SUMMARY OF MINOR NONCONFORMANCES

2. FROM CONTRACTOR:	3. CONTRACT NUMBER:	4. REQUEST NUMBER:
Martin Marietta Corporation	E07121-3143	FOS-007

5. NOMENCLATURE:	6. NUMBER:	7. REVISION:	8. DATE:
FOS Generalized Mass vs. SI Mode Frequency		C	January 23, 198-

9. NONCONFORMANCE:	10. MRB ACTION NO.:	11. SERIAL NUMBER(S):	12. LOT NUMBER:	13. QUANTITY:
[XX] MINOR [ ] MAJOR				

14. SUPPLIER OR SUBCONTRACTOR (GIVE NAME AND ADDRESS):

15. SPECIFIED REQUIREMENTS:

ST-ICD-02D, para. 3.5.2, Fig. 3.5.3

16. DESCRIPTION OF DEPARTURE FROM REQUIREMENTS:

From Modal Survey and Structural Linearity Tests, FOS Generalized Mass vs. Frequency exceeds limits defined by the curve in Fig. 3.5.3 as follows: (see Enclosure (1) hereto)

Freq. (H_z)		Generalized Mass ($LB\text{-}SEC^2/IN$)	Mode
30.2	(Modal)	0.45	Optical
28	(Modal)		Bench
26	(Linearity)		Torsion

17. REASON FOR REQUEST AND/OR CORRECTIVE ACTION TAKEN:

Redesign of the Optical Bench Structure would incur substantial cost and schedule impact.

18. REMARKS:

Assessment of the Structural Math Model showed that the reduced modal data in use at L.M.S.C. adequately produces this resonance.

19. CONTRACTOR CERTIFICATION: THE CONTRACTOR HEREBY CERTIFIES THAT THE ABOVE DESCRIBED DEVIATION IS A DEPARTURE FROM THE CONTRACTUAL REQUIREMENTS IN THE QUANTITIES AND/OR CONDITIONS AS STATED ABOVE.

[ ] _____ COST ADJUSTMENT (EXPLAIN)

[XX] NO COST ADJUSTMENT

TITLE	SIGNATURE OF AUTHORIZED REPRESENTATIVE	DATE
FOS Program Manager	/s/ L.H. Ripp	1/30/84

20. GOVERNMENT QUALITY ASSURANCE REPRESENTATIVE COMMENTS:

Retyped by MSFC for clarity

UCSD APPROVAL

TITLE	SIGNATURE	DATE
FOS Program Manager	/s/ Lawrence K. Randall	2/17/84

21. MSFC REVIEW:

ORGANIZATION SYMBOL	REPRESENTATIVE	CONCURRENCE	NON-CONCURRENCE	DATE

22. CONTRACTING OFFICER'S REPRESENTATIVE OR OTHER DULY DELEGATED AUTHORITY:

[ ] DISAPPROVAL (RECOMMENDED)

[ ] APPROVAL (RECOMMENDED) (WITH) (WITHOUT) PRICE ADJUSTMENT. $ _____

SIGNATURE

23. CONTRACTING OFFICER:

[ ] APPROVED

[ ] DISAPPROVED

[ ] SUBJECT TO CONDITIONS STATED ON MSFC FORM _____-1.

(New Page created by IRN 72)

SIGNATURE DATE

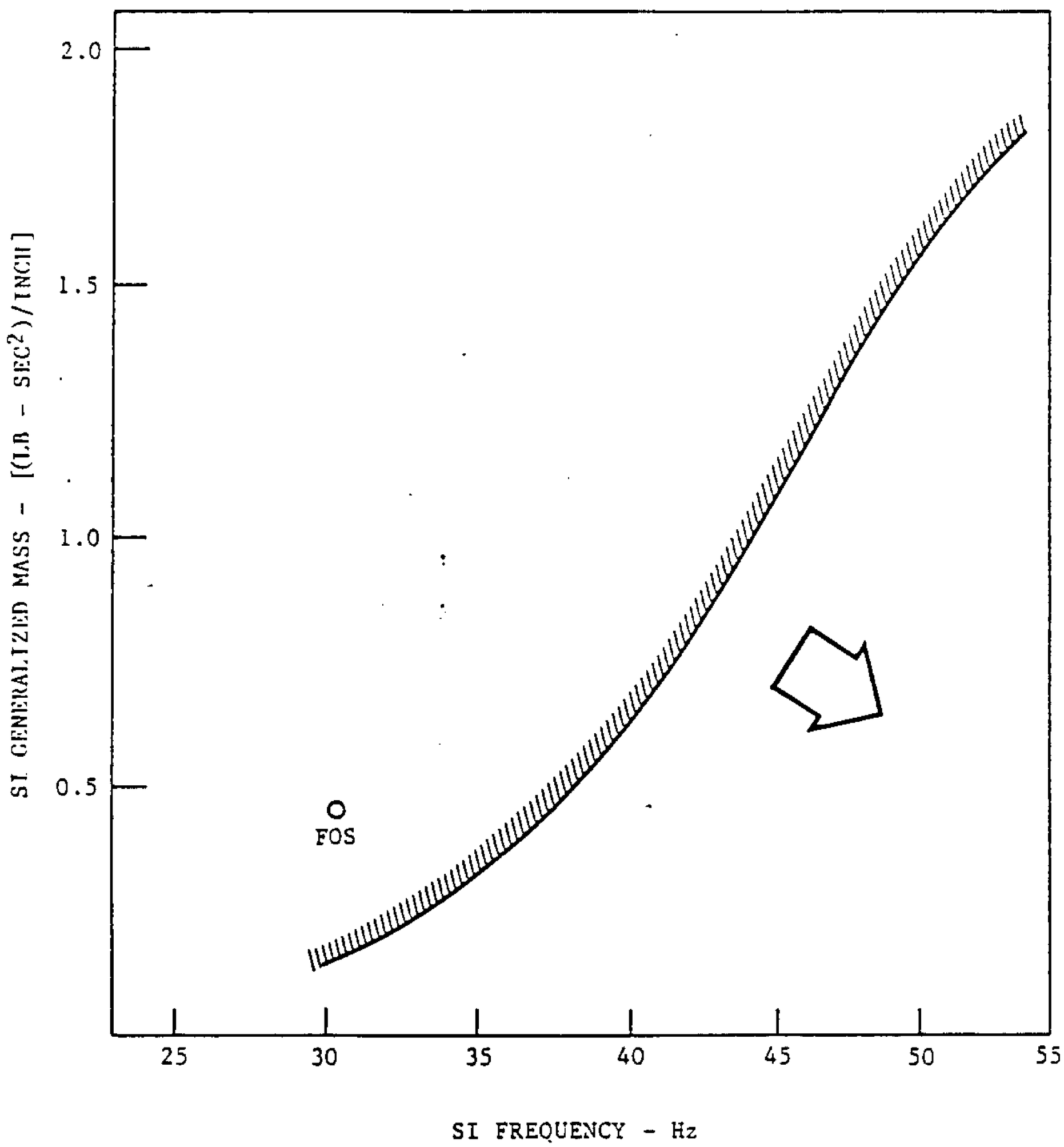

Figure 3.5-3 SI Generalized Mass Vs SI Mode Frequency

(New Page created by IRN 72)

DEVIATION APPROVAL REQUEST

1. FOR: [XX] DEVIATION [ ] SUMMARY OF MINOR NONCONFORMANCES

2. FROM CONTRACTOR:	3. CONTRACT NUMBER:	4. REQUEST NUMBER:
Martin Marietta Aerospace	E07121-3143	FOS-004

5. NOMENCLATURE:	6. NUMBER:	7. REVISION:	8. DATE:
Faint Object Spectrograph	-	A	Sept. 5, 1984

9. NONCONFORMANCE:	10. MRB ACTION NO.:	11. SERIAL NUMBER(S):	12. LOT NUMBER:	13. QUANTITY:
[XX] MINOR [ ] MAJOR				

14. SUPPLIER OR SUBCONTRACTOR (GIVE NAME AND ADDRESS):

Martin Marietta Aerospace

15. SPECIFIED REQUIREMENTS:

ICD-02, Axial SI to OTA & SSM

1) Fig. 3.3-2 Dynamic Envelope: Defines static envelope at 29.50 max from point "A" and dynamic envelope 0.25 in. beyond that.
2) Figure 3.3-15 SI Handle and Minimum Clearance: Defines the clearance envelope around handles as 2.25 in underneath by 8.0 in wide.

16. DESCRIPTION OF DEPARTURE FROM REQUIREMENTS:

See Sheet 2

1) Heat Pipe condenser and saddle exceed static and dynamic envelopes in very localized regions. The forward radiator exceeds the static envelope.
2) Heat pipe bend and end protrude slightly into handle clearance envelope.

17. REASON FOR REQUEST AND/OR CORRECTIVE ACTION TAKEN:

Incorporate in-plane heat pipe configurations

18. REMARKS:

Local static and dynamic envelope violations produce no known interferences. The handle clearance envelope violation is very localized and should present no problem in grasping the handle. The envelope violation previously approved in the basic DAR FOS-004 increased when the new red detector was installed.

19. CONTRACTOR CERTIFICATION: THE CONTRACTOR HEREBY CERTIFIES THAT THE ABOVE DESCRIBED DEVIATION IS A DEPARTURE FROM THE CONTRACTUAL REQUIREMENTS IN THE QUANTITIES AND/OR CONDITIONS AS STATED ABOVE.

[ ] _____ COST ADJUSTMENT (EXPLAIN)

[XX] NO COST ADJUSTMENT

TITLE _____ SIGNATURE OF AUTHORIZED REPRESENTATIVE /s/J.M. Velliuga for L.H. Ripp DATE 9-6-84

20. GOVERNMENT QUALITY ASSURANCE REPRESENTATIVE COMMENTS:

Concurrence: L.K. Randall /s/
Prog. Manager, UCSD

Retyped by MSFC for clarity

TITLE _____ SIGNATURE _____ DATE _____

21. MSFC REVIEW:

ORGANIZATION SYMBOL	REPRESENTATIVE	CONCURRENCE	NON-CONCURRENCE	DATE

22. CONTRACTING OFFICER'S REPRESENTATIVE OR OTHER DULY DELEGATED AUTHORITY:

[ ] DISAPPROVAL (RECOMMENDED)
[ ] APPROVAL (RECOMMENDED)(WITH) (WITHOUT) PRICE ADJUSTMENT. $ _____

SIGNATURE _____ DATE _____

23. CONTRACTING OFFICER:

[ ] APPROVED
[ ] DISAPPROVED
[ ] SUBJECT TO CONDITIONS STATED ON MSFC FORM _____-1.

(New Page created by IRN 75)

SIGNATURE _____ DATE _____

MSFC - Form 847 (Rev. May 1969)

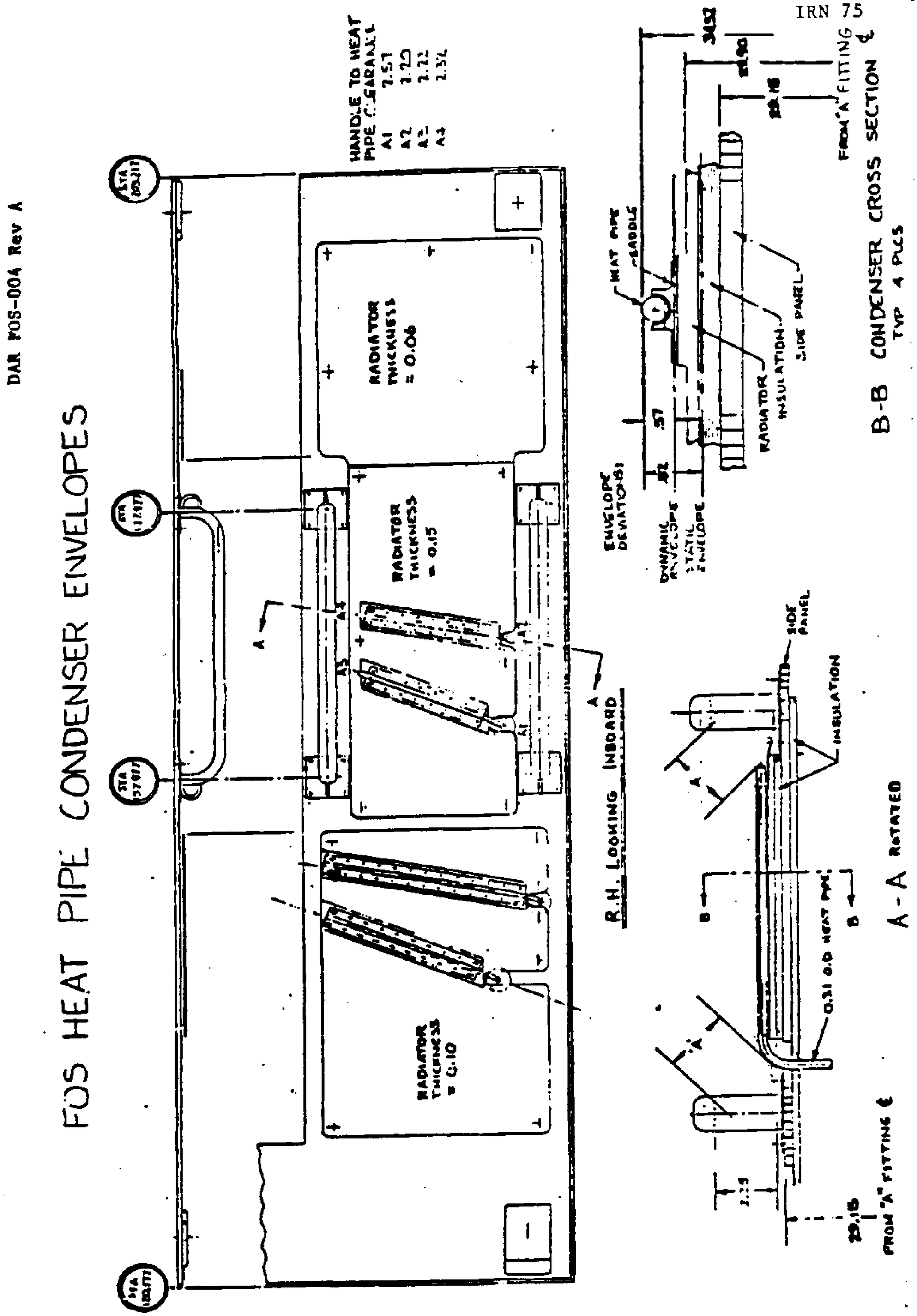

(New Page created by IRN 75)

DEVIATION APPROVAL REQUEST

1. FOR: [XX] DEVIATION [ ] SUMMARY OF MINOR NONCONFORMANCES

2. FROM CONTRACTOR:	3. CONTRACT NUMBER:	4. REQUEST NUMBER:
Martin Marietta Corporation	E07121-3143	FOS-029

5. NOMENCLATURE:	6. NUMBER:	7. REVISION:	8. DATE:
RE02 Exceedance		Original	3-10-85

9. NONCONFORMANCE:	10. MRB ACTION NO.:	11. SERIAL NUMBER(S):	12. LOT NUMBER:	13. QUANTITY:
[XX] MINOR [ ] MAJOR				

14. SUPPLIER OR SUBCONTRACTOR (GIVE NAME AND ADDRESS):

15. SPECIFIED REQUIREMENTS:

ST-ICD-02E, 29 June 1984, paragraph 3.7.9.8 Radiated Electric Field Emissions, Figures 3.7-7 Narrow Band and 3.7-8 Broad Band

16. DESCRIPTION OF DEPARTURE FROM REQUIREMENTS:

The attached marked up Figures 3.7-7 and 3.7-8 show the measured FOS narrow band and broad band emission envelopes that encompass all modes and the RIU emissions measured during FOS EMI testing.

17. REASON FOR REQUEST AND/OR CORRECTIVE ACTION TAKEN:

Requirements for RE02 Electric Field Radiated Emission levels were added after delivery of FOS.

18. REMARKS:

During FOS EMI testing, RE02 tests were run for information only and the exceedances were isolated to the RIU's. After FOS integration and test were essentially complete, incorporation of in-line filters or shielding the cables was considered but the impact was large and no fixes were implemented.

19. CONTRACTOR CERTIFICATION: THE CONTRACTOR HEREBY CERTIFIES THAT THE ABOVE DESCRIBED DEVIATION IS A DEPARTURE FROM THE CONTRACTUAL REQUIREMENTS IN THE QUANTITIES AND/OR CONDITIONS AS STATED ABOVE.

[ ] _____ COST ADJUSTMENT (EXPLAIN)

[XX] NO COST ADJUSTMENT

FOS Program Manager (Acting) — TITLE

/s/ for J.M. Vellinga — SIGNATURE OF AUTHORIZED REPRESENTATIVE

CONCURRENCE: /s/L.K. Randall
L.K. Randall
8/12/85 — DATE

20. GOVERNMENT QUALITY ASSURANCE REPRESENTATIVE COMMENTS:

Retyped by MSFC for clarity

TITLE — SIGNATURE — DATE

21. MSFC REVIEW:

ORGANIZATION SYMBOL	REPRESENTATIVE	CONCURRENCE	NON-CONCURRENCE	DATE

22. CONTRACTING OFFICER'S REPRESENTATIVE OR OTHER DULY DELEGATED AUTHORITY:

[ ] DISAPPROVAL (RECOMMENDED)
[ ] APPROVAL (RECOMMENDED)(WITH) (WITHOUT) PRICE ADJUSTMENT. $ _____

SIGNATURE — DATE

23. CONTRACTING OFFICER:

[ ] APPROVED
[ ] DISAPPROVED
[ ] SUBJECT TO CONDITIONS STATED ON MSFC FORM _____-1.

(New page created by IRN 80)

SIGNATURE — DATE

MSFC - Form 347 (Rev. May 1969)

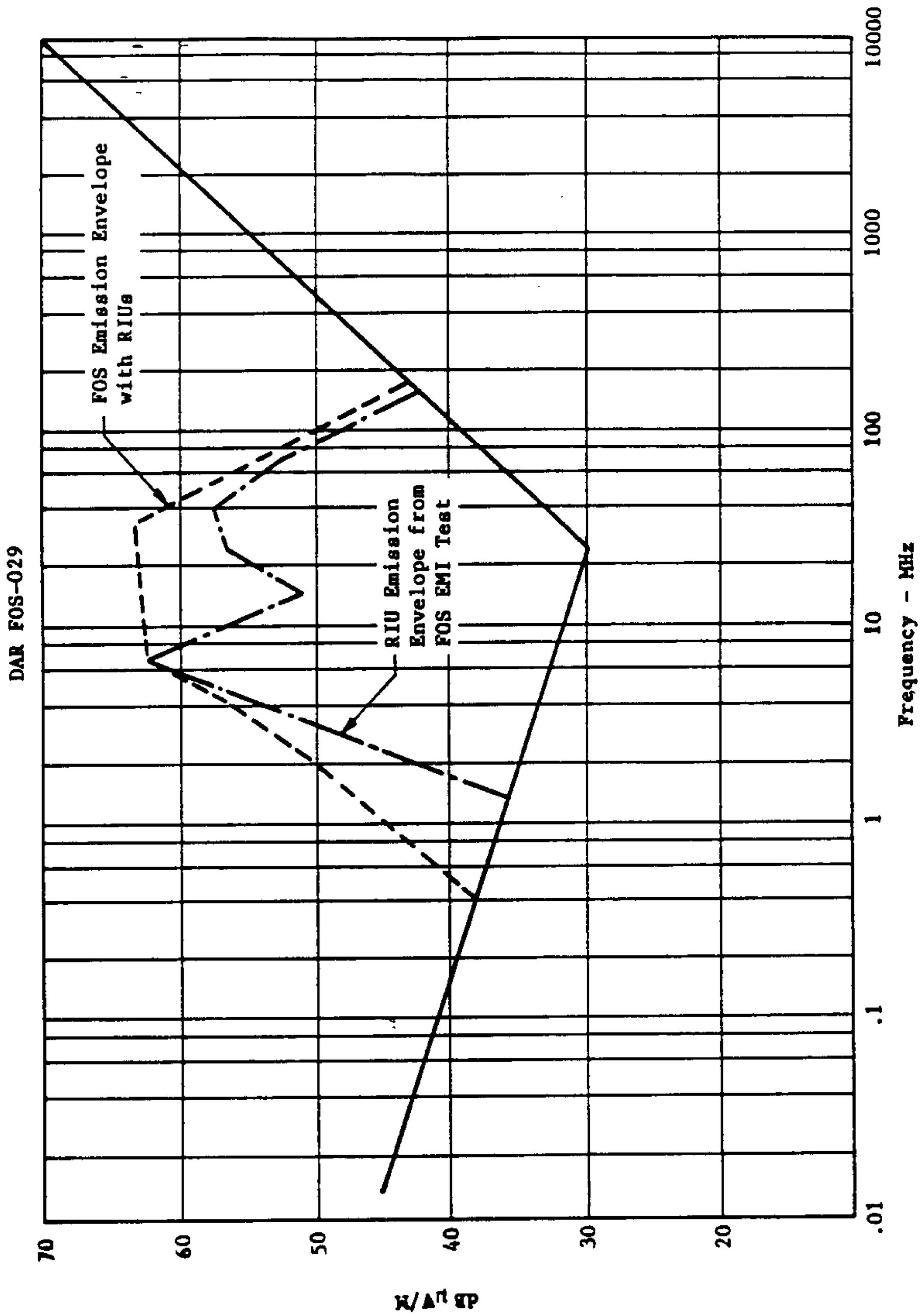

Figure 3.7-7 - Limit for RE02 Narrow Band Radiated Emission

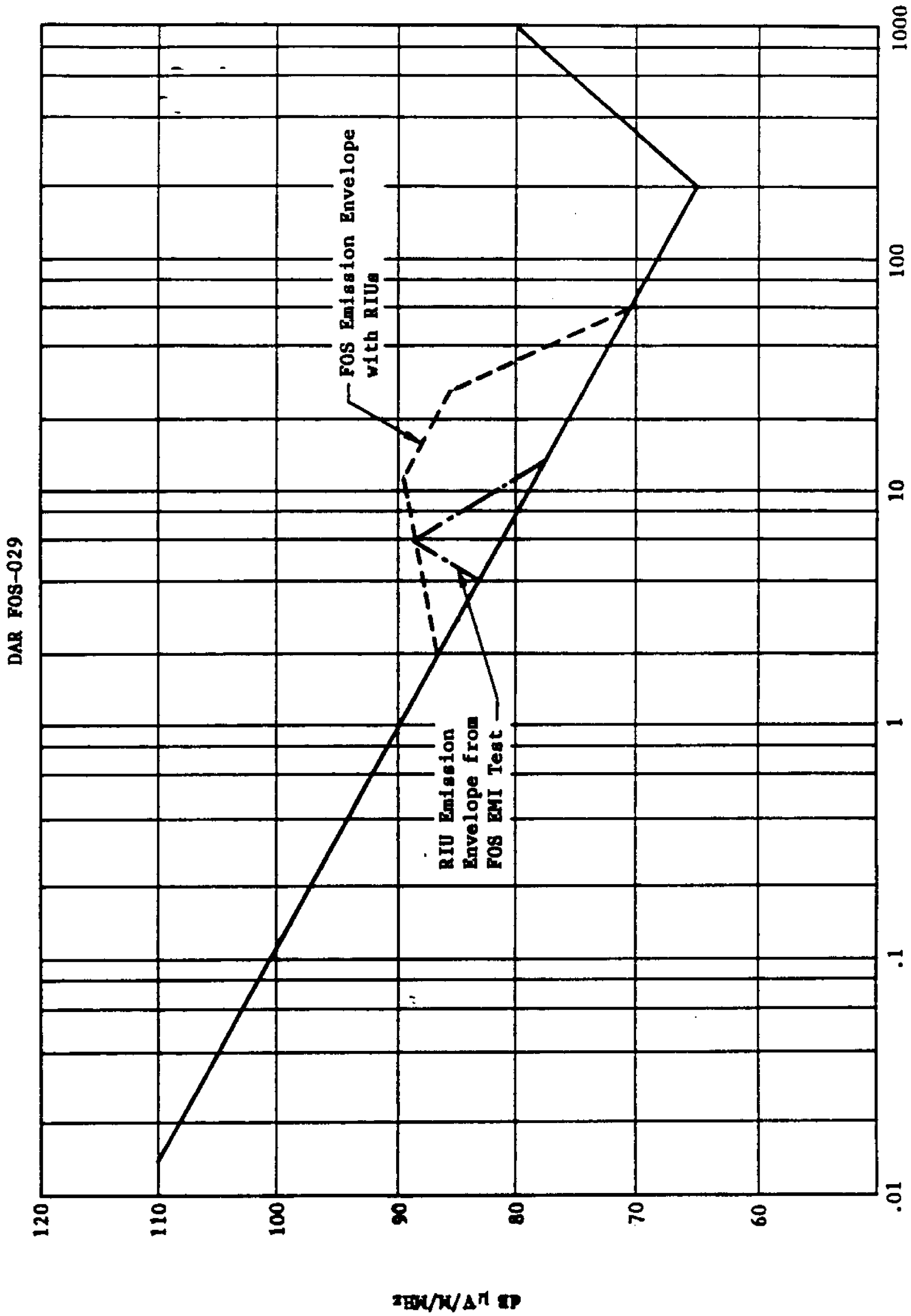

Figure 3.7-8 - Limit for RE02 Broad Band Radiated Emission

DEVIATION APPROVAL REQUEST

1. FOR: [XX] DEVIATION [ ] SUMMARY OF MINOR NONCONFORMANCES

FROM CONTRACTOR:	3. CONTRACT NUMBER:	4. REQUEST NUMBER:
Martin Marietta Corporation	E07121-3143	FOS-023C

5. NOMENCLATURE	6. NUMBER:	7. REVISION:	8. DATE:
FOS Aperture Position		B	10-18-84

9. NONCONFORMANCE	10. MRB ACTION NO.:	11. SERIAL NUMBER(S):	12. LOT NUMBER:	13. QUANTITY:
[XX] MINOR [ ] MAJOR	N/A	1	N/A	N/A

14. SUPPLIER OR SUBCONTRACTOR (GIVE NAME AND ADDRESS):

15. SPECIFIED REQUIREMENTS:

ST-ICD-02E, 29 June 1982; Aperture position is to lie in the SI focal plane defined in Figure 3.4-2

16. DESCRIPTION OF DEPARTURE FROM REQUIREMENTS:

The aperture was 0.020 inch aft of the mid point between Tangential and Sagittal focal planes. Correct by machining 0.020 inch off the "A" and "C" fittings. In addition, the IRN 71 corrections move the FOS forward another .001 inch. The associated ST-ICD-02E deviations are listed in the attachment.

17. REASON FOR REQUEST AND OR CORRECTIVE ACTION TAKEN:

Modification of FOS hardware would incur substantial additional cost and high risk.

18. REMARKS:

This supersedes FOS-023B in its entirety. The "A" and "C" latches were machined to move the FOS enclosure forward. The "A" fitting had .026 inch removed and was mounted on .006 inch shims.

19. CONTRACTOR CERTIFICATION: THE CONTRACTOR HEREBY CERTIFIES THAT THE ABOVE DESCRIBED DEVIATION IS A DEPARTURE FROM THE CONTRACTUAL REQUIREMENTS IN THE QUANTITIES AND OR CONDITIONS AS STATED ABOVE.

[ ] _____ COST ADJUSTMENT (EXPLAIN)

[X] NO COST ADJUSTMENT

FOS Program Manager (TITLE) /s/ L.H. Ripp (SIGNATURE OF AUTHORIZED REPRESENTATIVE) 2/11/85 (DATE)

20. GOVERNMENT QUALITY ASSURANCE REPRESENTATIVE COMMENTS:

Retyped by MSFC for clarity

TITLE SIGNATURE DATE

21. MSFC REVIEW:

ORGANIZATION SYMBOL	REPRESENTATIVE	CONCURRENCE	NON-CONCURRENCE	DATE

22. CONTRACTING OFFICER'S REPRESENTATIVE OR OTHER DULY DELEGATED AUTHORITY:

[ ] DISAPPROVAL (RECOMMENDED)

[ ] APPROVAL (RECOMMENDED) (WITH) (WITHOUT) PRICE ADJUSTMENT. $ _____

SIGNATURE DATE

23. CONTRACTING OFFICER:

[ ] APPROVED

[ ] DISAPPROVED

[ ] SUBJECT TO CONDITIONS STATED ON MSFC FORM _____-1.

(New Page created by IRN 86)

SIGNATURE DATE

MSFC - Form 847 (Rev. May 1969)

ST-ICD-02E deviations associated with machining the 'A' and 'C' Fittings to correct for the FOS aperture being 0.020 inch aft and for the IRN 71, .001 inch forward movement of FOS are:

p.3.3-2 Figure 3.3-1 Static Envelope: The 1.750 REF dimension changes to 1.730; Station 203.277 changes to 203.296.

p.3.3-5 Figure 3.3-3 Mount Point Interface 'A': The 1.750 REF dimension changes to 1.730 and the 2.25 REF dimension changes to 2.23 REF.

p.3.3-6 Figure 3.3-4 Mount Point Fitting 'A' SI half: The 203.277 A surface station changes to 203.296; the 1.750 ± .001 dimension changes to 1.730 ± .001; the 0.90 dimension changes to 0.88; the 0.47 dimension changes to 0.49; the 'L' dimensions in Table I of 1.17 max and 1.11 min change to 1.19 and 1.13.

p3.3-7 Figure 3.3-5 Mount Point Interface 'B': The 83.10 ± 0.03 dimension changes to 83.12 ± 0.03 (the B fitting was shimmed to put it within its nominal station tolerance).

p3.3-8 Figure 3.3-6 Mount Point Fitting 'B' SI half: The 0.49 shear pin engagement dimension changes to 0.47. The engagement dimension into the FOS nut plate (Table I) of 1.08 max and 1.02 min changes to 1.06 max and 1.00 min.

p3.3-9 Figure 3.3-7 Mount Point Interface 'C': The 1.500 REF dimension changes to 1.479 REF.

p3.3-10 Figure 3.3-8 Mount Point Fitting 'C' SI half: The 204.027 C surface station changes to 204.046; the 'L' dimensions in Table I of 0.78 max and 0.74 min changes to 0.80 and 0.76; and the 'shear pin length' in Table I of 0.40 changes to 0.42.

p3.3-11 Figure 3.3-9 Guiderails Interface Envelope: The 84.23 dimension changes to 84.25.

p3.3-12 Figure 3.3-10 Forward Guiderail Interface: The 0.875 dimension changes to 0.855 in two places (the guiderails were positioned to locations and tolerances of the ICD as clarified in PE drawing 679-6756); the 1.75 dimension changes to 1.730.

p3.3-19 Paragraph 3.3.7.1: The Position 2 F dimension changes from 4.836 (REF) to 4.856 (REF).

(New Page created by IRN 86)

PAGE

10.2 HRS Deviations and Waivers. The High Resolution Spectrograph (HRS), STE-06, is relieved from the requirements of this ICD to the extent shown on the NASA approved Ball Brothers Research Corporation Aerospace Systems Division (BASD) deviation and waiver requests listed below and included on the following pages. 10.2-1

The GSFC High Resolution Spectrograph (GHRS) Repair Kit (RK), STE-36, is relieved from the requirements of this ICD to the extent shown on the NASA approved deviation and waiver requests listed below and included on the following pages.

10.2.1 Edge Radius Variation, Waiver No. WR-HRS-001. 10.2-2

10.2.2 Magnetic Field Variance, Waiver No. WR-HRS-004R1. 10.2-3

10.2.3 Interface Fittings Variance, Waiver No. WR-HRS-017 10.2-5

10.2.4 Conducted Emissions Tests CE01/CE03, Waiver No. WR-HRS-023R2 10.2-7 IRN 78

10.2.5 Conducted Susceptibility Test CS01/CS02, Waiver No. WR-HRS-022 10.2-9 IRN 87

10.2.6 Radiated Emissions (RE-02) Waiver No. RK-W-001A (GHRS Repair Kit) 10.2-10 IRN 101

10.2.7 Envelope Intrusion Waiver No.RK-W-002 (GHRS Repair Kit) 10.2-14 IRN 104

(Supercedes page 10.2-1 dated 28 January 1994)

PAYLOAD SAFETY REQUIREMENTS WAIVER | WR-HRS-001 | 4-23-80

PAYLOAD NAME (Include model(s) or serial(s)).

Space Telescope Project

ST-ICD-02E
29 June 1984

SUBSYSTEM AND SPECIFIC COMPONENT AFFECTED.

Instrument: High Resolution Spectrograph

Component: Instrument enclosure panels
Reference: BASD drawings - Aft Cover Assembly 61920 & Proposed Crew Safety Features

REQUIREMENT BEING WAIVED?

HRS requests exception to para 3.3.8.1 of ST-ICD-02B (LMSC 4171770B) 28 March 1980 Two plane edges to be .110/.090 R (Requirement is .12 min) and 3 plane corners to be 07/.05 (Requirement is .25R) on covers as shown on drawings noted above.

HAZARD OR HAZARD CAUSE (Include reference to Payload Hazard Report.)

Reduced edge/corner radii of an instrument enclosure. ST instruments are designed as orbit replaceable units by suited astronauts.

REASON REQUIREMENT CANNOT BE FULFILLED.

Procurement lead times required HRS to purchase special extrusions prior to safety requirements. These thin extrusions preclude machining of large radii. (Structure would be compromized).

RATIONALE FOR ACCEPTANCE. (Attach applicable data as required to support rationale; i.e., drawings, test data, photographs, etc.)

10.2-2

CAB ORGANIZATION MANAGER | DATE

F. Speer, Project Manager, Space Telescope

NASA SFS ORGANIZATION | DATE

JSC Form 5420 (Feb 72) NASA-JSC

REQUEST FOR DEVIATION/WAIVER
(SEE NHL-STD-480 OR 481 FOR INSTRUCTIONS)

September 18, 1980

Goddard Space Flight Center
Code 440, Greenbelt, MD

1. BALL BROTHERS RESEARCH CORPORATION
BOULDER INDUSTRIAL PARK BOULDER, COLORADO

2. [ ] DEVIATION [X] WAIVER

3. [ ] MINOR [ ] MAJOR [ ] CRITICAL

4. DESIGNATION FOR DEVIATION/WAIVER

a. MODEL/TYPE	b. MFR. CODE	c. SYS. DESIG.	d. DEV/WAIVER NO.
IN017A	13993		WR-HRS-004R1

5. BASE LINE AFFECTED: [ ] FUNCTIONAL [X] ALLOCATED [ ] PRODUCT

6. OTHER SYSTEMS/CONFIGURATION ITEMS AFFECTED: [ ] YES [X] NO

7. SPECIFICATIONS AFFECTED-TEST PLAN

	MFR. CODE	SPEC./DOC. NO.	SCN
a. SYSTEM	06887	ST-ICD-0~~3~~2 (~~B~~ C)	
b. ITEM			
c. TEST PLAN			

8. DRAWINGS AFFECTED

MFR. CODE	NUMBER	REV.	NOR. NO.

9. TITLE OF DEVIATION/WAIVER
Magnetic Field Variance

10. CONTRACT NO. & LINE ITEM
NAS5-26000 #28

11. CONFIGURATION ITEM NOMENCLATURE
HRS Protoflight Unit

CLASSIFICATION OF DEFECT

12. CD NO.

13. DEFECT NO

14. DEFECT CLASSIFICATION: [X] MINOR [X] MAJOR [ ] CRITICAL

15. NAME OF PART OR LOWEST ASSEMBLY AFFECTED

16. PART NO. OR TYPE DESIG.

17. LOT NO.

18. QTY

19. RECURRING DEVIATION/WAIVER: [ ] YES [X] NO

20. EFFECT ON COST/PRICE
No Change on Approval

21. EFFECT ON DELIVERY SCHEDULE

22. EFFECT ON INTEGRATED LOGISTIC SUPPORT, INTERFACE, ETC.
NONE

23. DESCRIPTION OF DEVIATION/WAIVER

HRS requests exceptions to Para 3.6.2.2 of ST-ICD-0~~3~~2, Revision ~~B~~C, i.e., Maximum magnetic field caused by the SI in any orientation at the SI envelope shall not exceed 4 gauss.

See attached drawing.

24. NEED FOR DEVIATION/WAIVER

Para 3.6.2.2 SSM and SI Magnetic Field Intensity. The maximum magnetic field caused by the SI Envelope does not exceed 0.8 gauss. The maximum total magnetic field caused by the SSM in any orientation within the SI's volume shall not exceed 0.2 gauss.

25. PRODUCTION EFFECTIVITY BY SERIAL NUMBER
IN017A No. 1 and subsequent

26. SUBMITTING ACTIVITY AUTHORIZING SIGNATURE: George E. [illegible]

TITLE: HRS Program Manager

27. APPROVAL/DISAPPROVAL

a. [ ] APPROVAL RECOMMENDED

b. [ ] APPROVED [ ] DISAPPROVED

c. GOVERNMENT ACTIVITY

SIGNATURE

DATE

BR-426
6-69

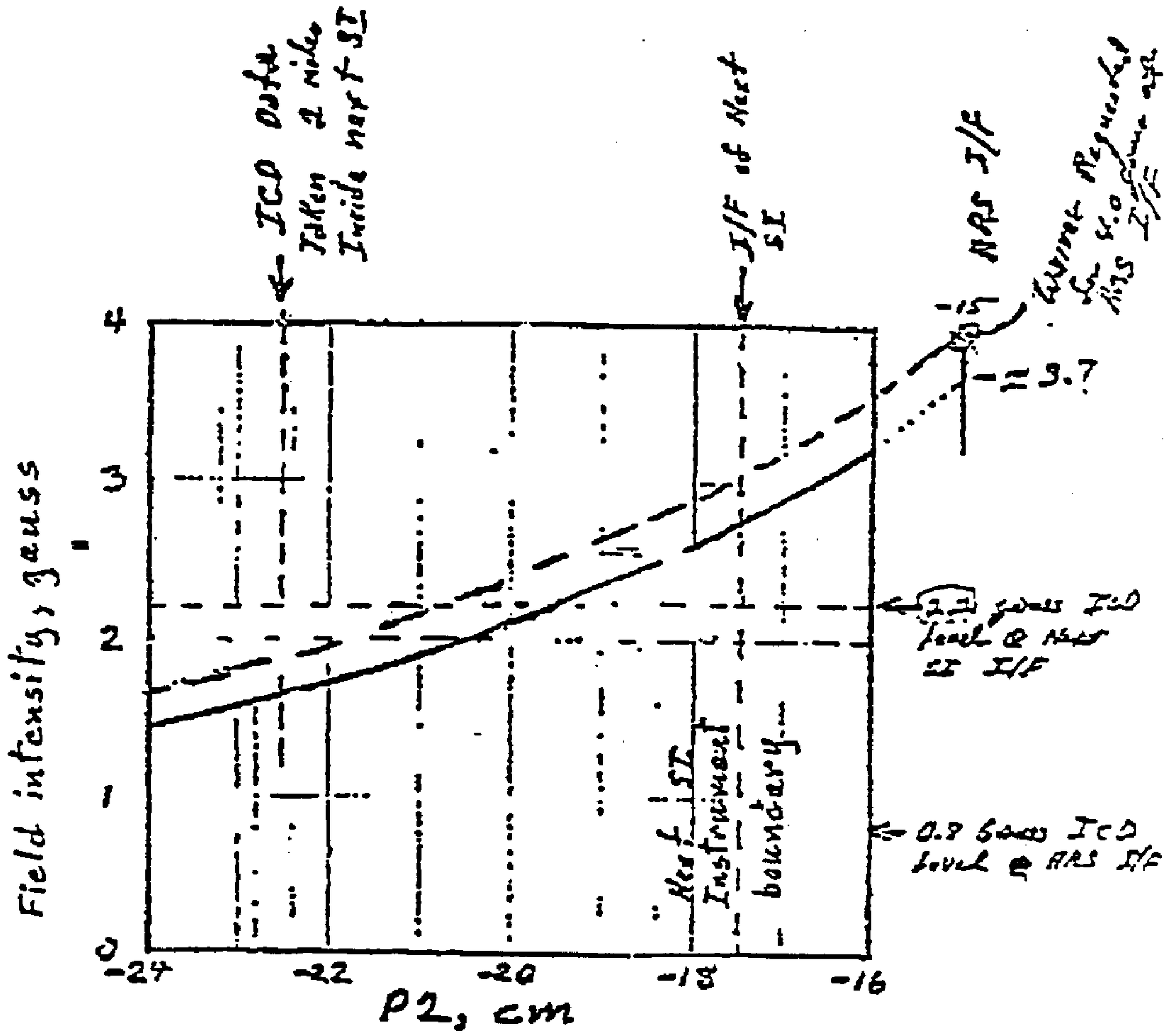

Peak Field intensity on the line (P1=-80 cm, P3=30 cm).

DEVIATION APPROVAL REQUEST

1. FOR: [XX] DEVIATION [ ] SUMMARY OF MINOR NONCONFORMANCES

FROM CONTRACTOR: GSFC ST/HRS Experiment Office

3. CONTRACT NUMBER: MOU 680+440

4. REQUEST NUMBER: BASD-WR-HRS-017

5. NOMENCLATURE: HRS

6. NUMBER: ST-ICD-02

7. REVISION: C

8. DATE: 4/10/80

9. NONCONFORMANCE: [XX] MINOR [ ] MAJOR

10. MRB ACTION NO.:

11. SERIAL NUMBER(S): 1

12. LOT NUMBER: N/A

13. QUANTITY: N/A

14. SUPPLIER OR SUBCONTRACTOR (GIVE NAME AND ADDRESS): Ball Aerospace Systems Div., Boulder Co. Contract: NAS5-26000

15. SPECIFIED REQUIREMENTS:

See Attached BASC-WR-HRS-017

16. DESCRIPTION OF DEPARTURE FROM REQUIREMENTS:

See Block 15

17. REASON FOR REQUEST AND/OR CORRECTIVE ACTION TAKEN:

See Block 24 of Subject Waiver Attached

18. REMARKS:

N/A

19. CONTRACTOR CERTIFICATION: THE CONTRACTOR HEREBY CERTIFIES THAT THE ABOVE DESCRIBED DEVIATION IS A DEPARTURE FROM THE CONTRACTUAL REQUIREMENTS IN THE QUANTITIES AND/OR CONDITIONS AS STATED ABOVE.

[ ] _____ COST ADJUSTMENT (EXPLAIN)

[XX] NO COST ADJUSTMENT

ST/HRS Exp. Mgr. (TITLE) /s/Raymond W. Melcher (SIGNATURE OF AUTHORIZED REPRESENTATIVE) 1/26/82 (DATE)

20. GOVERNMENT QUALITY ASSURANCE REPRESENTATIVE COMMENTS:

Concur: No adverse affects on HRS reliability, quality or safety.

Retyped by MSFC for clarity

TITLE SIGNATURE DATE

21. MSFC REVIEW:

ORGANIZATION SYMBOL	REPRESENTATIVE	CONCURRENCE	NON-CONCURRENCE	DATE

22. CONTRACTING OFFICER'S REPRESENTATIVE OR OTHER DULY DELEGATED AUTHORITY:

[ ] DISAPPROVAL (RECOMMENDED)

[ ] APPROVAL (RECOMMENDED)(WITH) (WITHOUT) PRICE ADJUSTMENT. $ _____

SIGNATURE DATE

23. CONTRACTING OFFICER:

[ ] APPROVED

[ ] DISAPPROVED

[ ] SUBJECT TO CONDITIONS STATED ON MSFC FORM _____-1.

(Supersedes pg. 10.2-5 dated 29 June 1984)

SIGNATURE DATE

REQUEST FOR DEVIATION/WAIVER
(SEE MIL-STD-480 OR 481 FOR INSTRUCTIONS)

DATE PREPARED
12/30/81

ST-ICD-02E
29 June 1984

1. BALL BROTHERS RESEARCH CORPORATION
BOULDER INDUSTRIAL PARK BOULDER, COLORADO

2. [ ] DEVIATION [X] WAIVER

3. [ ] MINOR [ ] MAJOR [ ] CRITICAL

4. DESIGNATION FOR DEVIATION/WAIVER

a. MODEL/TYPE	b. MFR. CODE	c. SYS. DESIG.	d. DRAWING NO
IN017A	13993		WR-HRS-017

5. BASE LINE AFFECTED: [ ] FUNCTIONAL [ ] ALLOCATED [X] PRODUCT

6. SINGLE SYSTEM/CONFIGURATION ITEMS AFFECTED: [ ] YES [X] NO

7. SPECIFICATIONS AFFECTED-TEST PLAN

	MFR. CODE	SPEC./DOC. NO.	SCN
a. SYSTEM			
b. ITEM		HRS-680-77-06	
c. TEST PLAN		HRS-2176-002	

8. DRAWINGS AFFECTED

MFR. CODE	NUMBER	REV.	a. MOD. NO.
13993	61511		
13993	61505		
13993	61489		

9. TITLE OF DEVIATION/WAIVER
Change in thickness of Interface Mounting Points "A","B", and "C"

10. CONTRACT NO. & LINE ITEM
NAS5-26000

11. CONFIGURATION ITEM NOMENCLATURE
HRS Protoflight Unit

12. CD NO.

13. DEFECT NO.

14. DEFECT CLASSIFICATION: [X] MINOR [ ] MAJOR [ ] CRITICAL

15. NAME OF PART OR LOWEST ASSEMBLY AFFECTED
Interface Fittings, A, B, & C

16. DWG. NO. OF PART BEING
61511-1 61489-1
61505-1

17. LOT NO.

18. QTY

19. REQUIRING DEVIATION/WAIVER: [ ] YES [X] NO

20. EFFECT ON COST/PRICE
Cost will increase if not approved since design is completed.

21. EFFECT ON DELIVERY SCHEDULE
None, if approved by 2/1/82

22. EFFECT ON INTEGRATED LOGISTIC SUPPORT, INTERFACE, ETC.
None

23. DESCRIPTION OF DEVIATION/WAIVER
Paragraph 3.3.2.1 and Figures 3.3-3, 3.3-5, 3.3-7, of ST-ICD-02C defines the OTA/SI Mounting Point Fittings, "A", "B", "C". These figures require a minimum fitting thickness 1.38 for each fitting "A", "B", and "C". Per BASD design drawings 61511, 61505, and 61489; the fitting thickness is .312 ±.010 for each fitting. This design is complete and was verbally approved by Perkin-Elmer about 2 years ago.

24. NEED FOR DEVIATION/WAIVER
The change in fitting thickness was made to make it easier to remove the HRS enclosure from the optical bench. The change in thickness will have no effect on the performance or function of the fittings. Sufficient material was designed into the fittings to provide adequate strength. All other interface dimensions on the fittings are per the ICD drawing requirements. The change in thickness will not effect the quality or reliability of the HRS instrument. These changes were coordinated with and approved by P-E and LMSC.

25. PRODUCTION EFFECTIVITY BY SERIAL NUMBER
IN017A No. 1 and subsequent.

26. SUBMITTING ACTIVITY AUTHORIZING SIGNATURE

TITLE
HRS Program Manager

27. APPROVAL/DISAPPROVAL

a. [ ] APPROVAL RECOMMENDED

b. [ ] APPROVED [ ] DISAPPROVED

c. GOVERNMENT ACTIVITY

SIGNATURE

DATE

BR-428
6-80

DEVIATION APPROVAL REQUEST

FOR: [XX] ~~DEVIATION~~ WAIVER [ ] SUMMARY OF MINOR NONCONFORMANCES

FROM CONTRACTOR:	3. CONTRACT NUMBER:	4. REQUEST NUMBER:
D.L. Fortna, GSFC Code/302		CCR 960-R1 PIRN 2208

5. NOMENCLATURE:	6. NUMBER:	7. REVISION:	8. DATE:
HRS Proto Flight Unit	N/A	960-R1 WR-HRS-023R2	12-3-84

9. NONCONFORMANCE:	10. MRB ACTION NO.:	11. SERIAL NUMBER(S):	12. LOT NUMBER:	13. QUANTITY:
[XX] MINOR [ ] MAJOR	N/A	N/A	N/A	N/A

14. SUPPLIER OR SUBCONTRACTOR (GIVE NAME AND ADDRESS):

BASD, Boulder Industrial Park, Boulder, Colorado

15. SPECIFIED REQUIREMENTS:

ST-ICD-02D
para. 3.7.9.3 and Figure 3.7-4

16. DESCRIPTION OF DEPARTURE FROM REQUIREMENTS:

See attachment

17. REASON FOR REQUEST AND/OR CORRECTIVE ACTION TAKEN:

See attachment

18. REMARKS:

19. CONTRACTOR CERTIFICATION: THE CONTRACTOR HEREBY CERTIFIES THAT THE ABOVE DESCRIBED DEVIATION IS A DEPARTURE FROM THE CONTRACTUAL REQUIREMENTS IN THE QUANTITIES AND/OR CONDITIONS AS STATED ABOVE.

[ ] _____ COST ADJUSTMENT (EXPLAIN)
[ ] NO COST ADJUSTMENT

TITLE _____ SIGNATURE OF AUTHORIZED REPRESENTATIVE _____ DATE _____

20. GOVERNMENT QUALITY ASSURANCE REPRESENTATIVE COMMENTS:

Retyped by MSFC for clarity

TITLE _____ SIGNATURE _____ DATE _____

21. MSFC REVIEW:

ORGANIZATION SYMBOL	REPRESENTATIVE	CONCURRENCE	NON-CONCURRENCE	DATE

22. CONTRACTING OFFICER'S REPRESENTATIVE OR OTHER DULY DELEGATED AUTHORITY:

[ ] DISAPPROVAL (RECOMMENDED)
[ ] APPROVAL (RECOMMENDED)(WITH) (WITHOUT) PRICE ADJUSTMENT. $ _____

SIGNATURE _____ DATE _____

23. CONTRACTING OFFICER:

[ ] APPROVED
[ ] DISAPPROVED
[ ] SUBJECT TO CONDITIONS STATED ON MSFC FORM _____-1.

(New Page created by IRN 78)

SIGNATURE _____ DATE _____

MSFC - Form 847 (Rev. May 1969)

16. Description of Deviation/Waiver

Narrow band conducted emissions on the power lines of the HRS exceed the limits of the ST-ICD-02D by as much as 16 db between the frequencies of 8 and 25 MHz. The HRS meets the narrow band limits across the remainder of the frequency spectrum of the ICD requirement. The HRS meets the broadband limits without exception.

17. Need for Deviation/Waiver

It has been determined by BASD by analysis and by testing that a change in the powerline filter design will not correct this problem. Major redesign and hardware modifications would be required. This effort would be very costly and would cuase extensive delays in the readiness of the instrument. It is believed that the 16 db deviation from the ICD requirement over this narrow frequency range will not interfer with the proper operation of the ST and its other instruments. It is therefore requested that this out-of-specification performance be waived and that the HRS be accepted without further modifications to solve these conducted emmissions problems.

(New Page created by IRN 78)

DEVIATION APPROVAL REQUEST

1. FOR: [XX] ~~DEVIATION~~ Waiver [ ] SUMMARY OF MINOR NONCONFORMANCES

FROM CONTRACTOR	3. CONTRACT NUMBER	4. REQUEST NUMBER
GSFC/ST Experiment Office	NAS5-26000	WR-HRS-022

5. NOMENCLATURE	6. NUMBER	7. REVISION	8. DATE
HRS Conducted Susceptibility Test CS01/CS02			Dec. 2, 1983

9. NONCONFORMANCE	10. MRB ACTION NO.	11. SERIAL NUMBER(S)	12. LOT NUMBER	13. QUANTITY
[ ] MINOR [ ] MAJOR				

14. SUPPLIER OR SUBCONTRACTOR (GIVE NAME AND ADDRESS):

Ball Aerospace Systems Div., Boulder, CO

15. SPECIFIED REQUIREMENTS.

ST-ICD-02, Para. 3.7.9.4: The SI is not susceptible to ripple and noise on the power lines. Susceptibility limits are shown in Fig. 3.7-5. These values apply at 24.0 ± .1 Vdc.

16. DESCRIPTION OF DEPARTURE FROM REQUIREMENTS:

Requirements of Conducted Susceptibility Test CS01/CS02 high counts on science data OTFA between 20 and 140 Hz on both positive and negative power input leads.

17. REASON FOR REQUEST AND OR CORRECTIVE ACTION TAKEN:

18. REMARKS.

Analysis shows that projected emissions on the ST power bus will still provide better than a 6 db safety margin.

19. CONTRACTOR CERTIFICATION: THE CONTRACTOR HEREBY CERTIFIES THAT THE ABOVE DESCRIBED DEVIATION IS A DEPARTURE FROM THE CONTRACTUAL REQUIREMENTS IN THE QUANTITIES AND OR CONDITIONS AS STATED ABOVE.

[ ] _____ COST ADJUSTMENT (EXPLAIN)

[XX] NO COST ADJUSTMENT

TITLE	SIGNATURE OF AUTHORIZED REPRESENTATIVE	DATE
HRS Program Manager	/s/ Wally Meyer	Dec. 2, 1983

20. GOVERNMENT QUALITY ASSURANCE REPRESENTATIVE COMMENTS:

Waiver Retyped by MSFC for Clarity

TITLE	SIGNATURE	DATE

21. MSFC REVIEW:

ORGANIZATION SYMBOL	REPRESENTATIVE	CONCURRENCE	NON-CONCURRENCE	DATE

22. CONTRACTING OFFICER'S REPRESENTATIVE OR OTHER DULY DELEGATED AUTHORITY:

[ ] DISAPPROVAL (RECOMMENDED)

[ ] APPROVAL (RECOMMENDED) (WITH) (WITHOUT) PRICE ADJUSTMENT. $ _____

SIGNATURE DATE

23. CONTRACTING OFFICER:

[ ] APPROVED

[ ] DISAPPROVED

[ ] SUBJECT TO CONDITIONS STATED ON MSFC FORM _____-1.

(New Page created by IRN 87)

SIGNATURE DATE

MSFC - Form 847 (Rev. May 1969)

REQUEST FOR DEVIATION / WAIVER

(See MIL-STD-480 or 481 for instructions)

930316

ST-ICD-02E
27 FEBRUARY 1985
IRN 101
7 MAY 1993

Public reporting burden for this collection of information is estimated to average 2 hours per response, including the time for reviewing instructions, searching existing data sources, gathering and maintaining the data needed, and completing and reviewing the collection of information. Send comments regarding this burden estimate or any other aspect of this collection of information, including suggestions for reducing this burden, to Washington Headquarters Services, Directorate for Information Operations and Reports, 1215 Jefferson Davis Highway, Suite 1204, Arlington, VA 22202-4302, and to the Office of Information and Regulatory Affairs, Office of Management and Budget, Washington, DC 20503.

1. ORIGINATOR NAME AND ADDRESS

Ball Electro-Optics/Cryogenics Division
P.O. Box 1062, Boulder, CO 80306-1062

2. [ ] DEVIATION [X] WAIVER

3. [ ] MINOR [X] MAJOR [ ] CRITICAL

4. DESIGNATION FOR DEVIATION / WAIVER

a. MODEL/TYPE	b. CAGE CODE	c. SYS DESIG.	d. DEV/WAIVER NO.
GHRS RK	13993	IN0032A	RK-W-001 A

5. BASELINE AFFECTED [X] FUNCTIONAL [ ] ALLOCATED [ ] PRODUCT

6. OTHER SYSTEM/CONFIGURATION ITEMS AFFECTED [ ] YES [X] NO

7. SPECIFICATIONS AFFECTED - TEST PLAN

	CAGE CODE	SPECIFICATION / DOCUMENT NO.	REV.
a. SYSTEM	13993	ST-ICD-02E & STE-36	
b. ITEM			
c. TEST PLAN			

8. DRAWINGS AFFECTED

CAGE CODE	NUMBER	REV.

9. TITLE OF DEVIATION / WAIVER
Radiated Emissions (RE-02)

9a. WEAPON SYSTEM CODE OR DESIGNATION
N/A

10. CONTRACT NO. AND LINE ITEM
NAS5-32072

11. PROCURING CONTRACTING OFFICER
Steve Kramer
CODE 286 TEL 301-286-6687

12. CONFIGURATION ITEM NOMENCLATURE
GHRS RK

13. CLASSIFICATION OF DEFECT

a. CD NO.	b. DEFECT NO.	c. DEFECT CLASSIFICATION
N/A	N/A	[ ] MINOR [ ] MAJOR [ ] CRITICAL N/A

14. NAME OF LOWEST PART/ASSEMBLY AFFECTED
Electronics Assy. GHRS Repair Kit

15. PART NO. OR TYPE DESIGNATION
529140

16. LOT NO.
001

17. QTY
1

18. RECURRING DEVIATION/WAIVER [ ] YES [X] NO

19. EFFECT ON COST/PRICE
None if approved

20. EFFECT ON DELIVERY SCHEDULE
None if approved

21. EFFECT ON INTEGRATED LOGISTICS SUPPORT, INTERFACE OR SOFTWARE
None

22. DESCRIPTION OF DEVIATION/WAIVER

20dB relaxation of RE02 limit from 4-40mHz in the Axial SI to OTA & SSM ICD, i.e., ST-ICD-02E para. 3.7.9.8, from requirements of para. 3.8.9 of STE-36, (no change in STE-36 from this)

23. NEED FOR DEVIATION/WAIVER

RE-02 tests of the GHRS RK were out of spec in various frequencies; however, it was determined that some of the emissions were generated from the test set and the RK merely "carried" these emissions from the overall test set-up
See attached (1 page and 2 figures)

24. SERIAL NUMBER(S) AFFECTED
001

25. SUBMITTING ACTIVITY AUTHORIZED SIGNATURE
Dave Fink 93-3-18

25a. TITLE
Project Engineer Quality Assurance

26. APPROVAL/DISAPPROVAL a. RECOMMEND [✓] APPROVAL [ ] DISAPPROVAL

b. APPROVAL	c. GOVERNMENT ACTIVITY	SIGNATURE	DATE (YYMMDD)
[✓] APPROVED [ ] DISAPPROVED	Deputy Associate Director of Flight Projects for HST	[signature]	5/7/93
d. APPROVAL [ ] APPROVED [ ] DISAPPROVED	e. GOVERNMENT ACTIVITY	SIGNATURE	DATE (YYMMDD)

(New Page Created by IRN 101)

Radiated Emissions (RE02) narrow band levels for the GHRS Repair Kit (RK) were found to be out of specification at various frequencies from 5 MHz to 30 MHz. The 30 MHz component was the highest and was found to be 20db above the specified limit line. Since the RK is in the aft shroud of the Hubble Space Telescope (HST), and all of the instruments in the aft shroud are tested to an E field of 1 Volt/Meter (120db), the RK levels of 562 Microvolts/Meter (55db) should not present a problem.

The RE02 test represents the absolute worst case conditions that can be imposed for the RK. The RK electronics, when powered, and without any representative spacecraft signals, is a D.C. circuit with no emissions. The emissions are generated by the representative signals from the RK Test Set. The following analysis shows that the expected levels in flight should be lower than found in the test.

The RK was placed in the EMI chamber and the Test Set was placed in the EMI chamber anteroom. Figure 1 outlines the physical setup for a single driver and receiver pair during the testing. Figure 2 shows all of the cables used.

The Goddard High Resolution Spectrograph (GHRS) contains a secondary signal ground that is not connected to any other ground or structure in the instrument and is referenced to the HST chassis by a signal logic return connected back at the HST Science Data Formatter (SDF).

The RK Test Set contains both the simulated driver (HST) and receiver (GHRS). The signal ground for this differential pair is connected together in the test set along with going through the cables and RK. A 35' ground loop is created that will radiate at high frequencies (See Figure 1). A simple calculation shows that a 35'(10' meter) loop will be a fairly efficient radiator at exactly 30 MHz. This correlates with the actual data. 30 MHz is also the approximate rated frequency for this type of driver device (7820). Another contributing factor is that the resistor termination is unbalanced which will create a net common mode noise on the shields. This situation does exist in the flight hardware and so it is a reasonable simulation for the RK. The other frequencies that are out of specification are all components of the rise times of the 7820 driver.

(New Page Created by IRN 101)

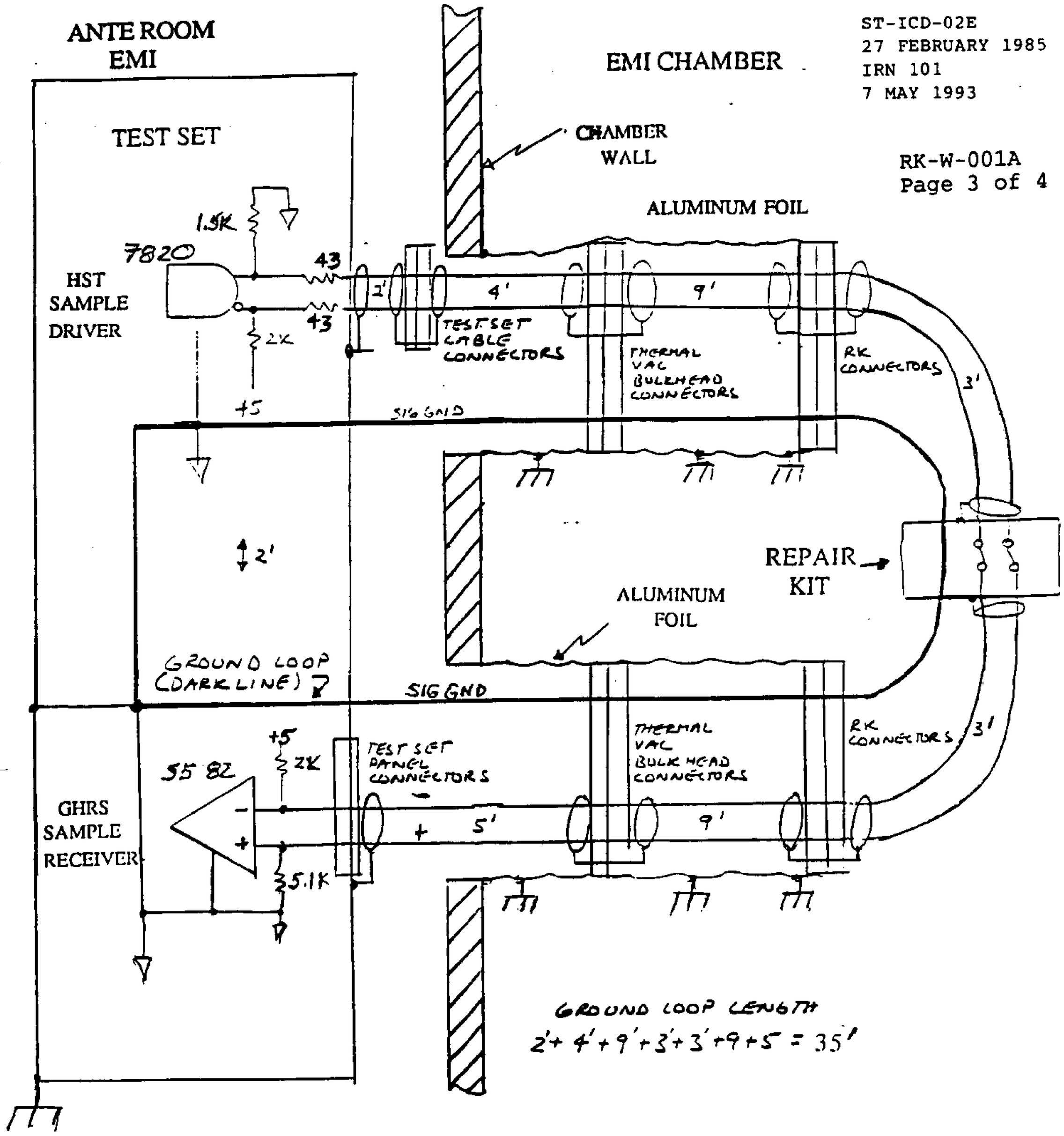
ANTE ROOM
EMI
EMI CHAMBER
TEST SET
CHAMBER
WALL
ALUMINUM FOIL
1.5K
7820
43
HST
SAMPLE
DRIVER
43
2K
2'
4'
9'
TEST SET
CABLE
CONNECTORS
THERMAL
VAC
BULKHEAD
CONNECTORS
RK
CONNECTORS
3'
+5
SIG GND
2'
REPAIR
KIT
ALUMINUM
FOIL
GROUND LOOP
(DARK LINE)
SIG GND
+5
2K
5582
TEST SET
PANEL
CONNECTORS
THERMAL
VAC
BULK HEAD
CONNECTORS
RK
CONNECTORS
3'
GHRS
SAMPLE
RECEIVER
5'
9'
5.1K
GROUND LOOP LENGTH
2'+4'+9'+3'+3'+9+5 = 35'

FIGURE 1

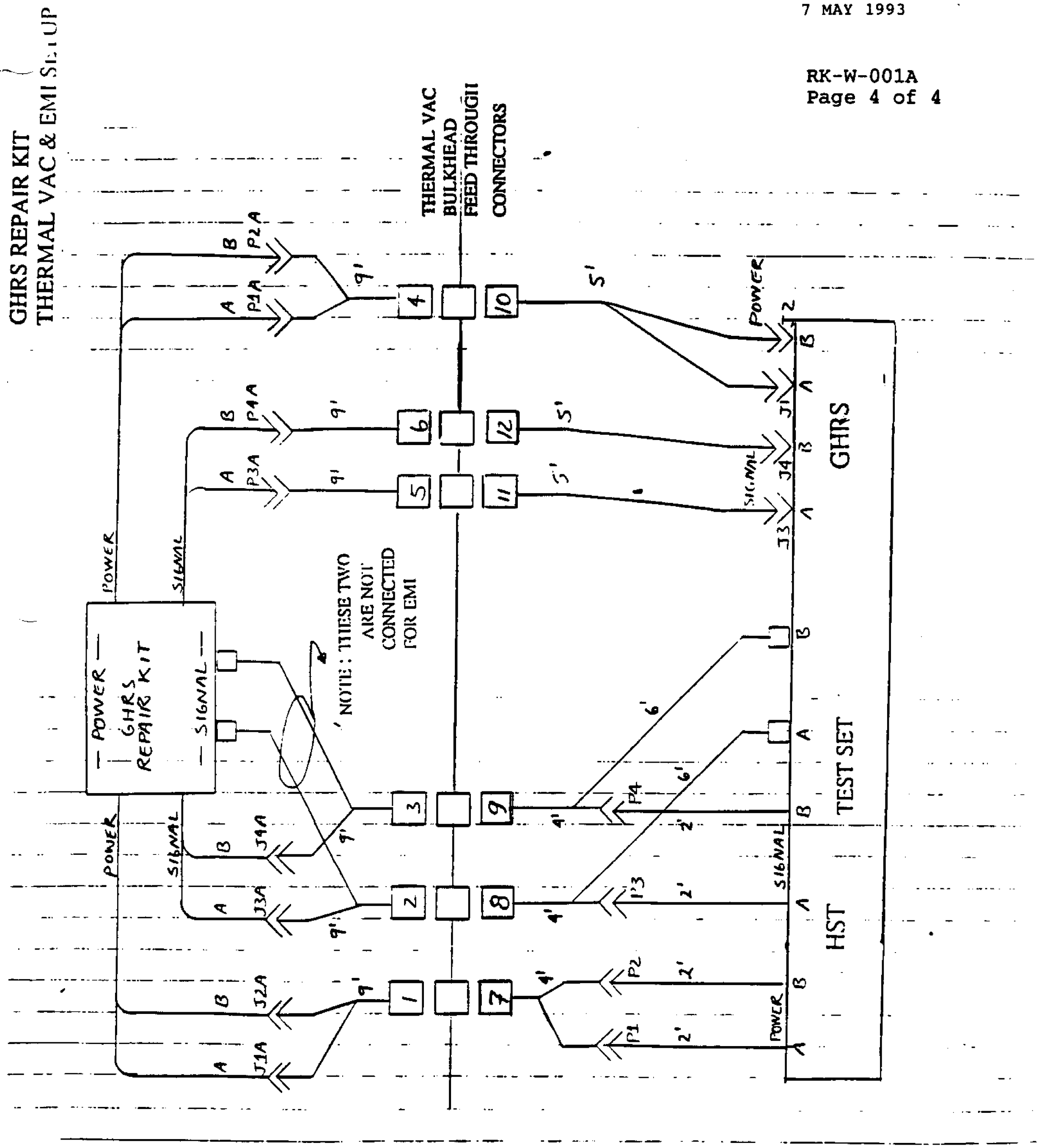
GHRS REPAIR KIT
THERMAL VAC & EMI SETUP
THERMAL VAC
BULKHEAD
FEED THROUGH
CONNECTORS
POWER
SIGNAL
GHRS
REPAIR KIT
NOTE: THESE TWO
ARE NOT
CONNECTED
FOR EMI
GHRS
TEST SET
HST

FIGURE 2

REQUEST FOR DEVIATION / WAIVER (RFD/RFW)

1. DATE (YYMMDD): 931012

Form Approved OMB No. 0704-0188

Public reporting burden for this collection of information is estimated to average 2 hours per response, including the time for reviewing instructions, searching existing data sources, gathering and maintaining the data needed, and completing and reviewing the collection of information. Send comments regarding this burden estimate or any other aspect of this collection of information, including suggestions for reducing this burden, to Department of Defense, Washington Headquarters Services, Directorate for Information Operations and Reports, 1215 Jefferson Davis Highway, Suite 1204, Arlington, VA 22202-4302, and to the Office of Management and Budget, Paperwork Reduction Project (0704-0188), Washington, DC 20503.
PLEASE DO NOT RETURN YOUR COMPLETED FORM TO EITHER OF THESE ADDRESSES. RETURN COMPLETED FORM TO THE GOVERNMENT ISSUING CONTRACTING OFFICER FOR THE CONTRACT/PROCURING ACTIVITY NUMBER LISTED IN ITEM 2 OF THIS FORM.

2. PROCURING ACTIVITY NUMBER: HST CCR 3842

3. DODAAC:

4. ORIGINATOR

a. TYPED NAME (First, Middle Initial, Last): JOHN LAWS/442

b. ADDRESS (Street, City, State, Zip Code): Flight Systems and Servicing Project, Goddard Space Flight Center, Greenbelt, Md. 20770

5. (X one): [ ] DEVIATION [XX] WAIVER

6. (X one): [ ] MINOR [XX] MAJOR [ ] CRITICAL

7. DESIGNATION FOR DEVIATION / WAIVER

a. MODEL/TYPE	b. CAGE CODE	c. SYS. DESIG.	d. DEV/WAIVER NO.
GHRS RK	13993	IN0032A	RK-W-001

8. BASELINE AFFECTED: [ ] FUNCTIONAL [XX] PRODUCT [ ] ALLOCATED

9. OTHER SYSTEM/CONFIGURATION ITEMS AFFECTED: [ ] YES [XX] NO

10. TITLE OF DEVIATION / WAIVER: GHRS REPAIR KIT ENVELOPE INTRUSION

11. CONTRACT NO. AND LINE ITEM: N/A

12. PROCURING CONTRACTING OFFICER: N/A
a. NAME (First, Middle Initial, Last):
b. CODE:
c. TELEPHONE NO.:

13. CONFIGURATION ITEM NOMENCLATURE: GHRS RK

14. CLASSIFICATION OF DEFECT
a. CD NO.:
b. DEFECT NO.:
c. DEFECT CLASSIFICATION: [ ] MINOR [ ] MAJOR [ ] CRITICAL

15. NAME OF LOWEST PART/ASSEMBLY AFFECTED: Electronics Assy, GHRS Repair Kit

16. PART NO. OR TYPE DESIGNATION: 529140

17. EFFECTIVITY: 001

18. RECURRING DEVIATION / WAIVER: [ ] YES [ ] NO

19. EFFECT ON COST / PRICE: None if approved.

20. EFFECT ON DELIVERY SCHEDULE: None if approved.

21. EFFECT ON INTEGRATED LOGISTICS SUPPORT, INTERFACE OR SOFTWARE:
None.

22. DESCRIPTION OF DEVIATION / WAIVER
The GHRS envelope will exceed the dimensional limits as specified in ST-ICD-02 Paragraph 3.3.1 "SI Envelope" after installation of the GHRS Repair Kit in orbit. There is no impact to the HST or other SIs and no waiver is required for STE-06 or STE-36.

23. NEED FOR DEVIATION / WAIVER
It is necessary to attach the repair kit to the GHRS envelope +P2 lifting point (Ref. Figure 3.3.13 "SI/GSE Interface") in ST-ICD-02, as no other suitable mounting point in close proximity to the instrument connector panel is available. The envelope protrusion due to the RK will be as per BASG drawing 529140.

24. CORRECTIVE ACTION TAKEN
None.

25. SUBMITTING ACTIVITY
a. TYPED NAME (First, Middle Initial, Last):
b. TITLE:
c. SIGNATURE:

26. APPROVAL / DISAPPROVAL
a. RECOMMEND: [ ] APPROVAL [ ] DISAPPROVAL

b. APPROVAL: [✓] APPROVED [ ] DISAPPROVED

c. GOVERNMENT ACTIVITY: Deputy Associate Director of Flight Projects for HST

d. TYPED NAME (First, Middle Initial, Last): John H. Campbell

e. SIGNATURE: John H. Campbell

f. DATE SIGNED (YYMMDD): 10/15/93

g. APPROVAL: [ ] APPROVED [ ] DISAPPROVED

h. GOVERNMENT ACTIVITY:

i. TYPED NAME (First, Middle Initial, Last):

j. SIGNATURE:

k. DATE SIGNED (YYMMDD):

(New Page Created by IRN 104)

DD Form 1694, APR 92

PAGE

10.3 FOC Deviations and Waivers

The Faint Object Camera (FOC), STE-04, is relieved from the requirements of this ICD to the extent shown on the NASA approved Dornier Systems GmbH deviation and waiver requests listed below and included on the following pages. 10.3-1

10.3.1	Additional Vent Port Locations, Deviation No. DS-002.	10.3-3
10.3.2	Crew Safety During Changeout, Deviation No. DS-004.	10.3-5
10.3.3	Quadrant Assignment, Deviation No. FOC-002.	10.3-6
10.3.4	-V1 End Temperature, Deviation No. FOC-006.	10.3-7
10.3.5	Safe Mode Power, Deviation No. DS-006.	10.3-8
10.3.6	FOC Time to go to Operation, Deviation No. FOC-008.	10.3-9
10.3.7	Effective Sink Temperature Distribution, Deviation No. DS-001R2	10.3-11
10.3.8	Hold Mode Power, Deviation No. FOC-005R2	10.3-13
10.3.9	SI Generated Ripple and Noise, Deviation No. DS-007	10.3-14
10.3.10	Unscheduled Maintenance and Initial Deployment, Deviation No. DS-005R1	10.3-17
10.3.11	Generalized Mass Vs. S1 Mode Frequency, Deviation No. DS-003R2	10.3-19

Admin. Change

(Supersedes pg. 10.3-1 dated 29 June 1984)

10.3.12	SI Generated Ripple and Noise, Deviation No. DS-007R1	10.3-22	IRN 63
10.3.13	Hold Mode Power, Deviation No. FOC-011	10.3-25	IRN 73
10.3.14	FOC Weight Limit, Deviation No. FOC-001R1	10.3-27	IRN 74
10.3.15	SI Generated Radiated Electric Field Emissions, Waiver No. FOC-015	10.3-28	IRN 79
10.3.16	FOC Bus Voltage Drop Out, DAR-FOC-016	10.3-31	IRN 93
10.3.17	FOC Connector Location, DAR-FOC-017	10.3-32	IRN 94

(Supersedes pg 10.3-2 dated 27 September 1985)

DEVIATION APPROVAL REQUEST

1. FOR: [XX] DEVIATION [ ] SUMMARY OF MINOR NONCONFORMANCES

FROM CONTRACTOR: Dornier System, Friedrichshafen

3. CONTRACT NUMBER: 3457/78/NL/SK

4. REQUEST NUMBER: DS-002

5. NOMENCLATURE: FOC Vent Locations

6. NUMBER:

7. REVISION:

8. DATE: June 18, 1980

9. NONCONFORMANCE: [ ] MINOR [XX] MAJOR

10. MRB ACTION NO.:

11. SERIAL NUMBER(S):

12. LOT NUMBER:

13. QUANTITY:

14. SUPPLIER OR SUBCONTRACTOR (GIVE NAME AND ADDRESS):

15. SPECIFIED REQUIREMENTS:
Section 3.3-11/ Figure 3.3-18 of ST-ICD-02 dated 10 th April 1980, page 3.3-21 and page 3.3-25

16. DESCRIPTION OF DEPARTURE FROM REQUIREMENTS:
Faint Object Camera Vent Locations: Additional Vent Locations on "P2 , P3" Side panels according attached drawing which represents an update of Fig. 3.3-18 applicable for FOC only.

17. REASON FOR REQUEST AND/OR CORRECTIVE ACTION TAKEN:
Number and dimension of vent ports already implemented in the LCS aft panel cannot be enlarged further due to design restraints. However these two vent ports do not provide a total conductance sufficient to establish a low enough pressure (10^{-4} Torr) in about 100 hours. Therefore it is mandatory to implement two additional vent ports located in the LCS side panels and located nearly upright the DHU Camera - Intensifier interface plane.

19. CONTRACTOR CERTIFICATION: THE CONTRACTOR HEREBY CERTIFIES THAT THE ABOVE DESCRIBED DEVIATION IS A DEPARTURE FROM THE CONTRACTUAL REQUIREMENTS IN THE QUANTITIES AND/OR CONDITIONS AS STATED ABOVE.

[ ] _____ COST ADJUSTMENT (EXPLAIN)

[XX] NO COST ADJUSTMENT

TITLE _____ SIGNATURE OF AUTHORIZED REPRESENTATIVE /s/ A. Lehn DATE June 20, 1980

20. GOVERNMENT QUALITY ASSURANCE REPRESENTATIVE COMMENTS:

Retyped by MSFC for clarity

TITLE _____ SIGNATURE _____ DATE _____

21. MSFC REVIEW:

ORGANIZATION SYMBOL	REPRESENTATIVE	CONCURRENCE	NON-CONCURRENCE	DATE

22. CONTRACTING OFFICER'S REPRESENTATIVE OR OTHER DULY DELEGATED AUTHORITY:

[ ] DISAPPROVAL (RECOMMENDED)

[ ] APPROVAL (RECOMMENDED)(WITH) (WITHOUT) PRICE ADJUSTMENT. $ _____

SIGNATURE _____ DATE _____

23. CONTRACTING OFFICER:

[ ] APPROVED

[ ] DISAPPROVED

[ ] SUBJECT TO CONDITIONS STATED ON MSFC FORM _____-1.

(Supersedes pg. 10.3-2 dated 29 June 1984)

SIGNATURE _____ DATE _____

MSFC - Form 847 (Rev. May 1969)

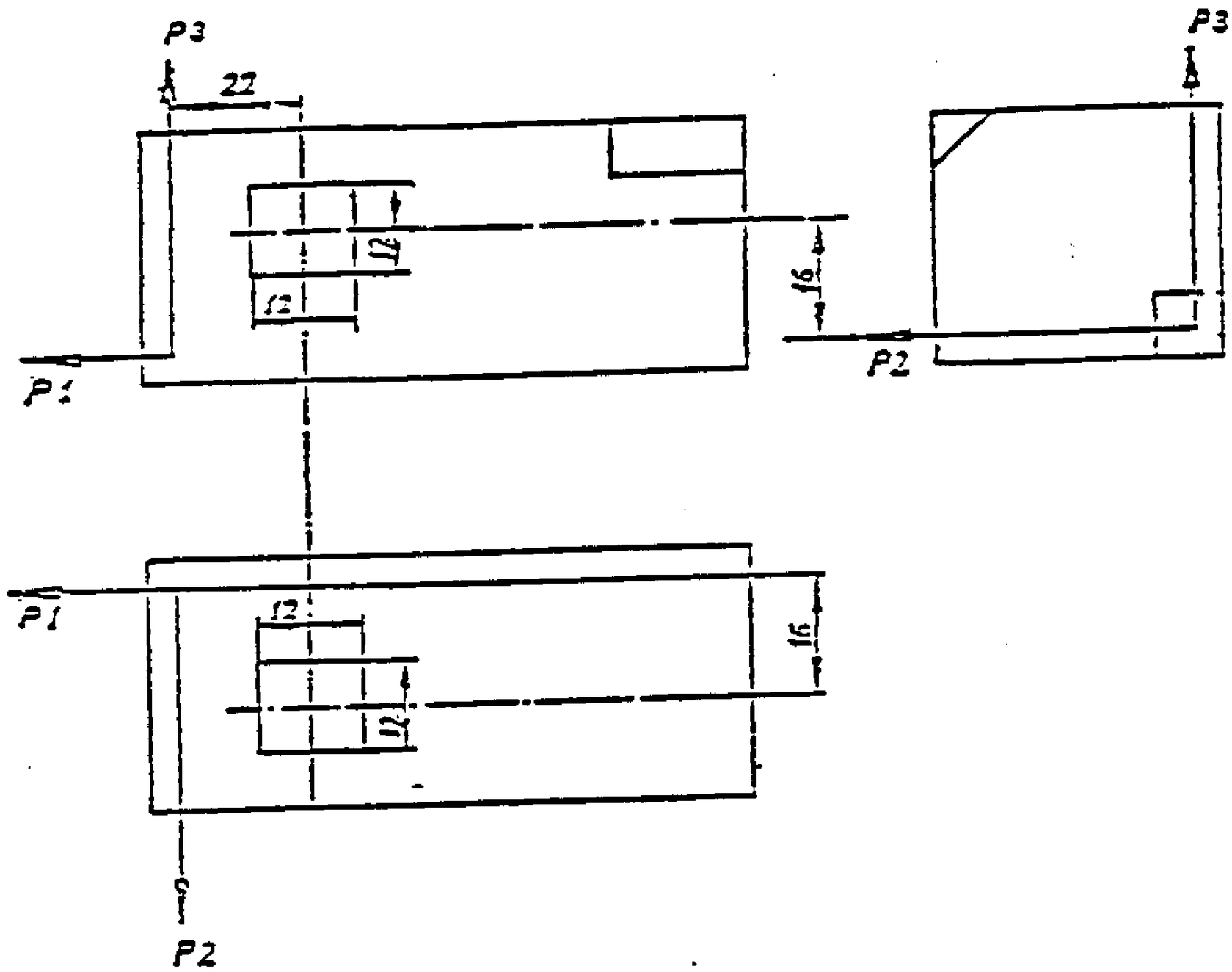

Fig. 3.3-13 FOC Vent Locations

(Supersedes pg. 10.3-3 dated 29 June 1984)

ST-ICD-02E
27 August 1984
Admin. Change

DEVIATION APPROVAL REQUEST

1. FOR: [XX] DEVIATION [ ] SUMMARY OF MINOR NONCONFORMANCES

FROM CONTRACTOR: Dornier System, Friedrichshafen

3. CONTRACT NUMBER: 3457/78/NL/SK

4. REQUEST NUMBER: DS-004

5. NOMENCLATURE: Crew and FOC Safety During Change-out

6. NUMBER:

7. REVISION:

8. DATE: June 27, 1980

9. NONCONFORMANCE: [ ] MINOR [XX] MAJOR

10. MRB ACTION NO.:

11. SERIAL NUMBER(S):

12. LOT NUMBER:

13. QUANTITY:

14. SUPPLIER OR SUBCONTRACTOR (GIVE NAME AND ADDRESS):

15. SPECIFIED REQUIREMENTS:
Section 3.3.8.1 of ST-ICD-02 dated 10 April 1980

Access holes or openings in the dimensional range of 0.5 to 1.5 inches are guarded if exposed to the EV crew member.

16. DESCRIPTION OF DEPARTURE FROM REQUIREMENTS:
Faint Object Camera
The protective grids have square holes of 1.45 x 1.45 inches except in the area of ST interface connector bracket support struts where the hole dimension is limited to 1.45 x 1.25 inches.

17. REASON FOR REQUEST AND/OR CORRECTIVE ACTION TAKEN:
The grid design was established when the requirement was introduced. Change of grid hole dimensions requires redesign and remanufacturing of Qualification Spare Unit.

18. REMARKS:

19. CONTRACTOR CERTIFICATION: THE CONTRACTOR HEREBY CERTIFIES THAT THE ABOVE DESCRIBED DEVIATION IS A DEPARTURE FROM THE CONTRACTUAL REQUIREMENTS IN THE QUANTITIES AND/OR CONDITIONS AS STATED ABOVE.

[ ] _____ COST ADJUSTMENT (EXPLAIN)
[ ] NO COST ADJUSTMENT

TITLE _____ SIGNATURE OF AUTHORIZED REPRESENTATIVE _____ DATE _____

20. GOVERNMENT QUALITY ASSURANCE REPRESENTATIVE COMMENTS:

Retyped by MSFC for clarity

TITLE _____ SIGNATURE _____ DATE _____

21. MSFC REVIEW:

ORGANIZATION SYMBOL	REPRESENTATIVE	CONCURRENCE	NON-CONCURRENCE	DATE

22. CONTRACTING OFFICER'S REPRESENTATIVE OR OTHER DULY DELEGATED AUTHORITY:

[ ] DISAPPROVAL (RECOMMENDED)
[ ] APPROVAL (RECOMMENDED)(WITH) (WITHOUT) PRICE ADJUSTMENT. $ _____

SIGNATURE _____ DATE _____

23. CONTRACTING OFFICER:

[ ] APPROVED
[ ] DISAPPROVED
[ ] SUBJECT TO CONDITIONS STATED ON MSFC FORM _____-1.

(Supersedes pg. 10.3-4 dated 29 June 1984)

SIGNATURE _____ DATE _____

MSFC - Form 847 (Rev. May 1969)

DEVIATION APPROVAL REQUEST

1. FOR: [XX] DEVIATION [ ] SUMMARY OF MINOR NONCONFORMANCES

FROM CONTRACTOR: European Space Agency

3. CONTRACT NUMBER:

4. REQUEST NUMBER: FOC-002

5. NOMENCLATURE: FOC Quadrant Assignment

6. NUMBER:

7. REVISION:

8. DATE: Jan 8, 1981

9. NONCONFORMANCE: [XX] MINOR [ ] MAJOR

10. MRB ACTION NO.:

11. SERIAL NUMBER(S):

12. LOT NUMBER:

13. QUANTITY:

14. SUPPLIER OR SUBCONTRACTOR (GIVE NAME AND ADDRESS): European Space Agency

15. SPECIFIED REQUIREMENTS:
Section 3.2.2.1 of ST-ICD-02C

Each SI is designed to be capable of being mounted in any of the four quadrants as shown in Fig. 3.2-1 and meets all of the Interfaces as desired in the documents.

16. DESCRIPTION OF DEPARTURE FROM REQUIREMENTS:
FOC is only fully compatible with the designated Quadrant -V2 -V3 for the following reasons:

a) detailed thermal Verification will be undertaken for this quadrant only

b) the HRA apodiser will be designed for this quadrant only due to the three dots to mask the SI Primary Mirror Fixation Points and the off axis astigmatism correction.

17. REASON FOR REQUEST AND/OR CORRECTIVE ACTION TAKEN:
Reasons of Cost and Practicality

18. REMARKS:
Reassignment to another quadrant would require a reverification and possibly retrimming of the FOC Thermo subsystem and a modification and remanufacture of the HRA apodiser.

19. CONTRACTOR CERTIFICATION: THE CONTRACTOR HEREBY CERTIFIES THAT THE ABOVE DESCRIBED DEVIATION IS A DEPARTURE FROM THE CONTRACTUAL REQUIREMENTS IN THE QUANTITIES AND/OR CONDITIONS AS STATED ABOVE.

[ ] _____ COST ADJUSTMENT (EXPLAIN)

[ ] NO COST ADJUSTMENT

TITLE _____ SIGNATURE OF AUTHORIZED REPRESENTATIVE /s/ R.J. Laurance DATE Jan. 21, 1981

20. GOVERNMENT QUALITY ASSURANCE REPRESENTATIVE COMMENTS:

Retyped by MSFC for clarity

TITLE _____ SIGNATURE _____ DATE _____

21. MSFC REVIEW:

ORGANIZATION SYMBOL	REPRESENTATIVE	CONCURRENCE	NON-CONCURRENCE	DATE

22. CONTRACTING OFFICER'S REPRESENTATIVE OR OTHER DULY DELEGATED AUTHORITY:

[ ] DISAPPROVAL (RECOMMENDED)

[ ] APPROVAL (RECOMMENDED)(WITH) (WITHOUT) PRICE ADJUSTMENT. $ _____

SIGNATURE _____ DATE _____

23. CONTRACTING OFFICER:

[ ] APPROVED

[ ] DISAPPROVED

[ ] SUBJECT TO CONDITIONS STATED ON MSFC FORM _____-1.

(Supersedes pg. 10.3-5 dated 29 June 1984)

SIGNATURE _____ DATE _____

MSFC - Form 347 (Rev. May 1969)

ST-ICD-02E
27 August 1984
Admin. Change

DEVIATION APPROVAL REQUEST

1. FOR: [XX] DEVIATION [ ] SUMMARY OF MINOR NONCONFORMANCES

FROM CONTRACTOR: ESA

3. CONTRACT NUMBER:

4. REQUEST NUMBER: FOC-006

5. NOMENCLATURE: FOC -V1 end temperature waiver

6. NUMBER:

7. REVISION:

8. DATE:

9. NONCONFORMANCE: [XX] MINOR [ ] MAJOR

10. MRB ACTION NO.:

11. SERIAL NUMBER(S):

12. LOT NUMBER:

13. QUANTITY:

14. SUPPLIER OR SUBCONTRACTOR (GIVE NAME AND ADDRESS):

ESA

15. SPECIFIED REQUIREMENTS:

In PIRN 2117R4
Fig. 3.6-2 specified the various zones of -V1 surface to be within defined temperature ranges, namely: $-30°C \leq T \leq +20°C$
$-25°C \leq T \leq +20°C$
$-20°C \leq T \leq +20°C$

16. DESCRIPTION OF DEPARTURE FROM REQUIREMENTS:

FOC Waiver:
-V1 side temperature of EBA electronics to range from +45°C to -40°C. This waiver is limited to the DICU 1 and DICU 2 and OBC electronic boxes with a -V1 facing surface area not to exceed 1.25 square feet.

17. REASON FOR REQUEST AND OR CORRECTIVE ACTION TAKEN:

Temperature range predicted on those FOC units.

18. REMARKS:

Waiver already agreed at SI to OTA/SSM IFWG
see P-E letter attached OTA-80-146 dated March 25, 1980.

19. CONTRACTOR CERTIFICATION: THE CONTRACTOR HEREBY CERTIFIES THAT THE ABOVE DESCRIBED DEVIATION IS A DEPARTURE FROM THE CONTRACTUAL REQUIREMENTS IN THE QUANTITIES AND/OR CONDITIONS AS STATED ABOVE.

[ ] _____ COST ADJUSTMENT (EXPLAIN)
[ ] NO COST ADJUSTMENT

TITLE _____ SIGNATURE OF AUTHORIZED REPRESENTATIVE _____ DATE _____

20. GOVERNMENT QUALITY ASSURANCE REPRESENTATIVE COMMENTS:

Retyped by MSFC for clarity

TITLE _____ SIGNATURE _____ DATE _____

21. MSFC REVIEW:

ORGANIZATION SYMBOL	REPRESENTATIVE	CONCURRENCE	NON-CONCURRENCE	DATE

22. CONTRACTING OFFICER'S REPRESENTATIVE OR OTHER DULY DELEGATED AUTHORITY:

[ ] DISAPPROVAL (RECOMMENDED)
[ ] APPROVAL (RECOMMENDED)(WITH) (WITHOUT) PRICE ADJUSTMENT. $ _____

SIGNATURE _____ DATE _____

23. CONTRACTING OFFICER:

[ ] APPROVED
[ ] DISAPPROVED
[ ] SUBJECT TO CONDITIONS STATED ON MSFC FORM _____-1.

(Supersedes pg. 10.3-6 dated 29 June 1984)

SIGNATURE _____ DATE _____

MSFC - Form 347 (Rev. May 1969)

ST-ICD-02E
27 August 1984
Admin. Change

DEVIATION APPROVAL REQUEST

1. FOR: [XX] DEVIATION [ ] SUMMARY OF MINOR NONCONFORMANCES

2. FROM CONTRACTOR:	3. CONTRACT NUMBER:	4. REQUEST NUMBER:
Dornier System GMBH, Friedrichshafen	3457/78/NL/SK	DS-006

5. NOMENCLATURE:	6. NUMBER:	7. REVISION:	8. DATE:
Safe Mode Power			March 17, 1981

9. NONCONFORMANCE:	10. MRB ACTION NO.:	11. SERIAL NUMBER(S):	12. LOT NUMBER:	13. QUANTITY:
[XX] MINOR [ ] MAJOR				

14. SUPPLIER OR SUBCONTRACTOR (GIVE NAME AND ADDRESS):

15. SPECIFIED REQUIREMENTS:
Section 3.6.1.2.2.6 Safing (TBR FOC ECP) of ST-ICD-02C, dated 10 April 1980, second sentence states: ..."SI's are limited to hold power during safing"...
PIRN 2131 includes the same requirement.

16. DESCRIPTION OF DEPARTURE FROM REQUIREMENTS:
Faint Object Camera:
..."FOC is limited either to 78 Watts (RIU's on) or to 74 Watts (RIU's off) during ST safing"...

17. REASON FOR REQUEST AND/OR CORRECTIVE ACTION TAKEN:
The minimum power consumption of 63.7 Watts (59.9 Watts) which is required to prevent damage of FOC (EHTs and OBE), if effective sink temperature is -50°C, might be exceeded by 13.4 Watts due to design constraints which cannot be overcome without major impacts.

18. REMARKS:
Recorded maximum power consumption of FOC during safing represents best estimate/test data. The actual power consumption in orbit will vary between 63.7 to 78 Watts (59.9 to 74 Watts respectively).

19. CONTRACTOR CERTIFICATION: THE CONTRACTOR HEREBY CERTIFIES THAT THE ABOVE DESCRIBED DEVIATION IS A DEPARTURE FROM THE CONTRACTUAL REQUIREMENTS IN THE QUANTITIES AND/OR CONDITIONS AS STATED ABOVE.

[ ] _____ COST ADJUSTMENT (EXPLAIN)
[XX] NO COST ADJUSTMENT

_____ TITLE /s/ SIGNATURE OF AUTHORIZED REPRESENTATIVE March 24, 1981 DATE

20. GOVERNMENT QUALITY ASSURANCE REPRESENTATIVE COMMENTS:

Retyped by MSFC for clarity

TITLE SIGNATURE DATE

21. MSFC REVIEW:

ORGANIZATION SYMBOL	REPRESENTATIVE	CONCURRENCE	NON-CONCURRENCE	DATE

22. CONTRACTING OFFICER'S REPRESENTATIVE OR OTHER DULY DELEGATED AUTHORITY:
[ ] DISAPPROVAL (RECOMMENDED)
[ ] APPROVAL (RECOMMENDED) (WITH) (WITHOUT) PRICE ADJUSTMENT. $ _____

SIGNATURE DATE

23. CONTRACTING OFFICER:
[ ] APPROVED
[ ] DISAPPROVED
[ ] SUBJECT TO CONDITIONS STATED ON MSFC FORM _____-1.

(Supersedes pg. 10.3-7 dated 29 June 1984)

SIGNATURE DATE

MSFC - Form 347 (Rev. May 1963)

DEVIATION APPROVAL REQUEST

1. FOR: [XX] DEVIATION [ ] SUMMARY OF MINOR NONCONFORMANCES

2. FROM CONTRACTOR: European Space Agency

3. CONTRACT NUMBER:

4. REQUEST NUMBER: FOC-008

5. NOMENCLATURE: FOC Time to go to Operation

6. NUMBER:

7. REVISION:

8. DATE:

9. NONCONFORMANCE: [XX] MINOR [ ] MAJOR

10. MRB ACTION NO.:

11. SERIAL NUMBER(S):

12. LOT NUMBER:

13. QUANTITY:

14. SUPPLIER OR SUBCONTRACTOR (GIVE NAME AND ADDRESS): European Space Agency

15. SPECIFIED REQUIREMENTS:
SI to OTA/SSM ICD-02C section 3.6.1.1.4.1 calls for "SI's to achieve operational mode in less than 2 orbits and preserve interface temperatures."

16. DESCRIPTION OF DEPARTURE FROM REQUIREMENTS:
The Faint Object Camera can not achieve full image stability in 2 orbits (3.2 hrs). All other requirements will be met.

17. REASON FOR REQUEST AND/OR CORRECTIVE ACTION TAKEN:
The Faint Object Camera can not achieve full operation in 2 orbits (3.2 hrs) as thermal transients will not have died out. The attached figure shows the analysis of thermal transient of FOC detector electronics in going from Hold to Operation. Full image stability will not be obtained until 5 hours after transission from Hold mode.

18 Remarks

Subject previously covered by PIRN 2134R1 and PIRN 2134R2 which were disapproved.

19. CONTRACTOR CERTIFICATION: THE CONTRACTOR HEREBY CERTIFIES THAT THE ABOVE DESCRIBED DEVIATION IS A DEPARTURE FROM THE CONTRACTUAL REQUIREMENTS IN THE QUANTITIES AND/OR CONDITIONS AS STATED ABOVE.

[ ] _____ COST ADJUSTMENT (EXPLAIN)

[XX] NO COST ADJUSTMENT

TITLE _____ SIGNATURE OF AUTHORIZED REPRESENTATIVE _____ DATE _____

20. GOVERNMENT QUALITY ASSURANCE REPRESENTATIVE COMMENTS:

Retyped by MSFC for clarity

TITLE _____ SIGNATURE _____ DATE _____

21. MSFC REVIEW:

ORGANIZATION SYMBOL	REPRESENTATIVE	CONCURRENCE	NON-CONCURRENCE	DATE

22. CONTRACTING OFFICER'S REPRESENTATIVE OR OTHER DULY DELEGATED AUTHORITY:

[ ] DISAPPROVAL (RECOMMENDED)

[ ] APPROVAL (RECOMMENDED)(WITH) (WITHOUT) PRICE ADJUSTMENT. $ _____

SIGNATURE _____ DATE _____

23. CONTRACTING OFFICER:

[ ] APPROVED

[ ] DISAPPROVED

[ ] SUBJECT TO CONDITIONS STATED ON MSFC FORM _____-1.

(Supersedes pg. 10.3-8 dated 29 June 1984)

SIGNATURE _____ DATE _____

MSFC - Form 347 (Rev. May 1969)

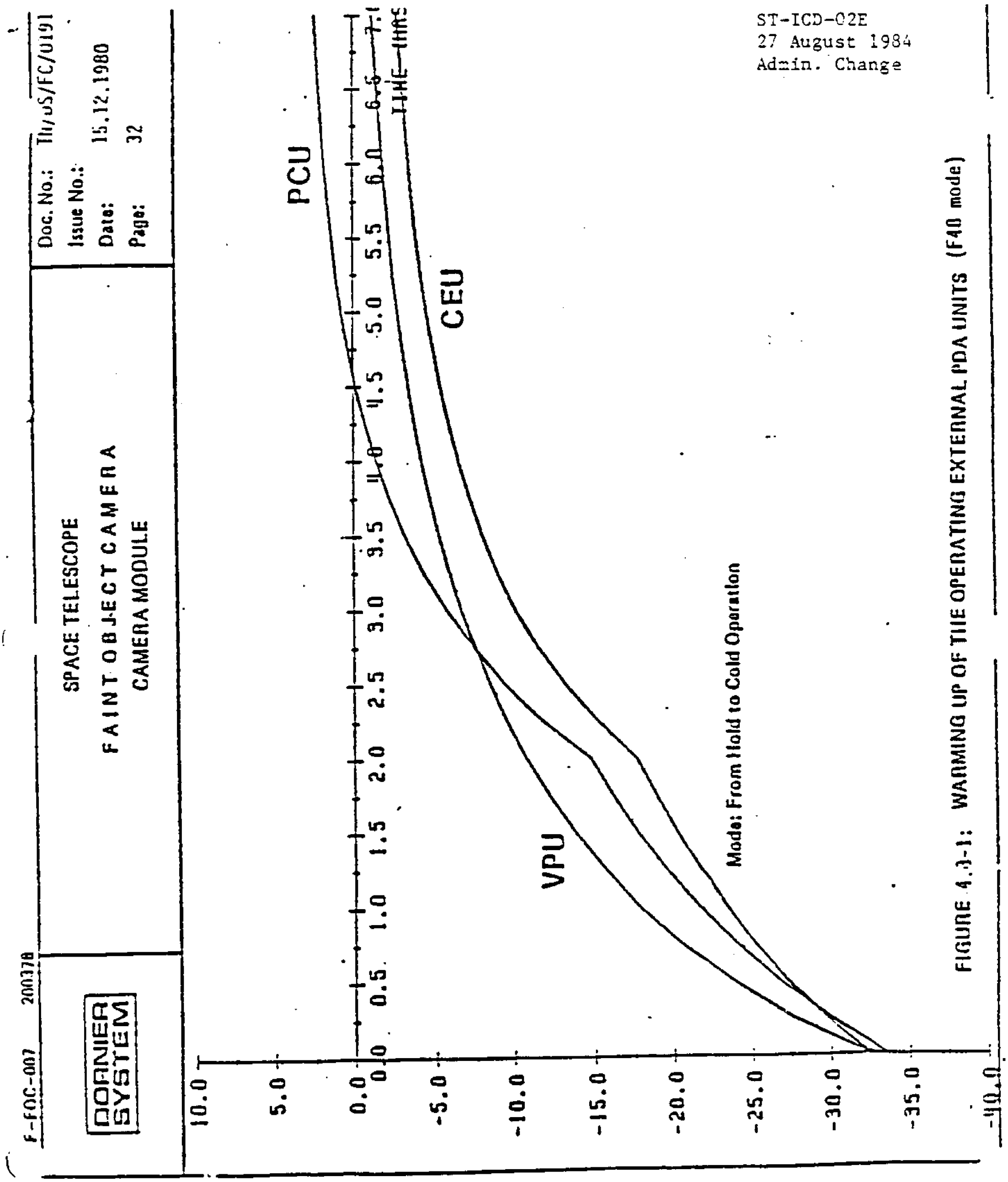

FIGURE 4.3-1: WARMING UP OF THE OPERATING EXTERNAL PDA UNITS (F40 mode)

(Supersedes pg. 10.3-9 dated 29 June 1984)

DEVIATION APPROVAL REQUEST

1. FOR: [XX] DEVIATION [ ] SUMMARY OF MINOR NONCONFORMANCES

2. FROM CONTRACTOR: FOC ESA

3. CONTRACT NUMBER:

4. REQUEST NUMBER: DS-001

5. NOMENCLATURE: Effective Sink Temperature distribution for FOC

6. NUMBER:

7. REVISION: R2

8. DATE: August 12, 1981

9. NONCONFORMANCE: [ ] MINOR [XX] MAJOR

10. MRB ACTION NO.:

11. SERIAL NUMBER(S):

12. LOT NUMBER:

13. QUANTITY:

14. SUPPLIER OR SUBCONTRACTOR (GIVE NAME AND ADDRESS): ESA

15. SPECIFIED REQUIREMENTS:
Section 3.6.1.1.3.2 of ST-ICD-02 dated 10 April 1980 pg. 3.6-5 and pg 3.6-6

16. DESCRIPTION OF DEPARTURE FROM REQUIREMENTS:
Faint Object Camera Effective Sink Temperature

Specification of 12 individual sinks for hot operational, cold operational and hold cold as the thermal interface ST to FOC according to attached 5 pages.

17. REASON FOR REQUEST AND/OR CORRECTIVE ACTION TAKEN:
Effective sink temperature data as provided in section 3.6.1.1.3.2 of ST-ICD-02 are not appropriate for the FOC external configuration and cannot be used further on for FOC themal control S/S analysis and design.

18. REMARKS:
Analyses have demonstrated that the application of effective sink temperatures according to figure 3.6.3 result in major errors with respect to node temperature, heat flux and heater power calculations.

19. CONTRACTOR CERTIFICATION: THE CONTRACTOR HEREBY CERTIFIES THAT THE ABOVE DESCRIBED DEVIATION IS A DEPARTURE FROM THE CONTRACTUAL REQUIREMENTS IN THE QUANTITIES AND/OR CONDITIONS AS STATED ABOVE.

[XX] _____ COST ADJUSTMENT (EXPLAIN) 10 KAU for radiators trimming tasks.

[ ] NO COST ADJUSTMENT

TITLE _____ SIGNATURE OF AUTHORIZED REPRESENTATIVE _____ DATE _____

20. GOVERNMENT QUALITY ASSURANCE REPRESENTATIVE COMMENTS:

Retyped by MSFC for clarity

TITLE _____ SIGNATURE _____ DATE _____

21. MSFC REVIEW:

ORGANIZATION SYMBOL	REPRESENTATIVE	CONCURRENCE	NON-CONCURRENCE	DATE

22. CONTRACTING OFFICER'S REPRESENTATIVE OR OTHER DULY DELEGATED AUTHORITY:

[ ] DISAPPROVAL (RECOMMENDED)

[ ] APPROVAL (RECOMMENDED)(WITH) (WITHOUT) PRICE ADJUSTMENT. $ _____

SIGNATURE _____ DATE _____

23. CONTRACTING OFFICER:

[ ] APPROVED

[ ] DISAPPROVED

[ ] SUBJECT TO CONDITIONS STATED ON MSFC FORM _____-1.

(Supersedes pg. 10.3-10 dated 29 June 1984)

SIGNATURE _____ DATE _____

MSFC - Form 547 (Rev. May 1969)

DAR for FOC Operation and Hold Modes

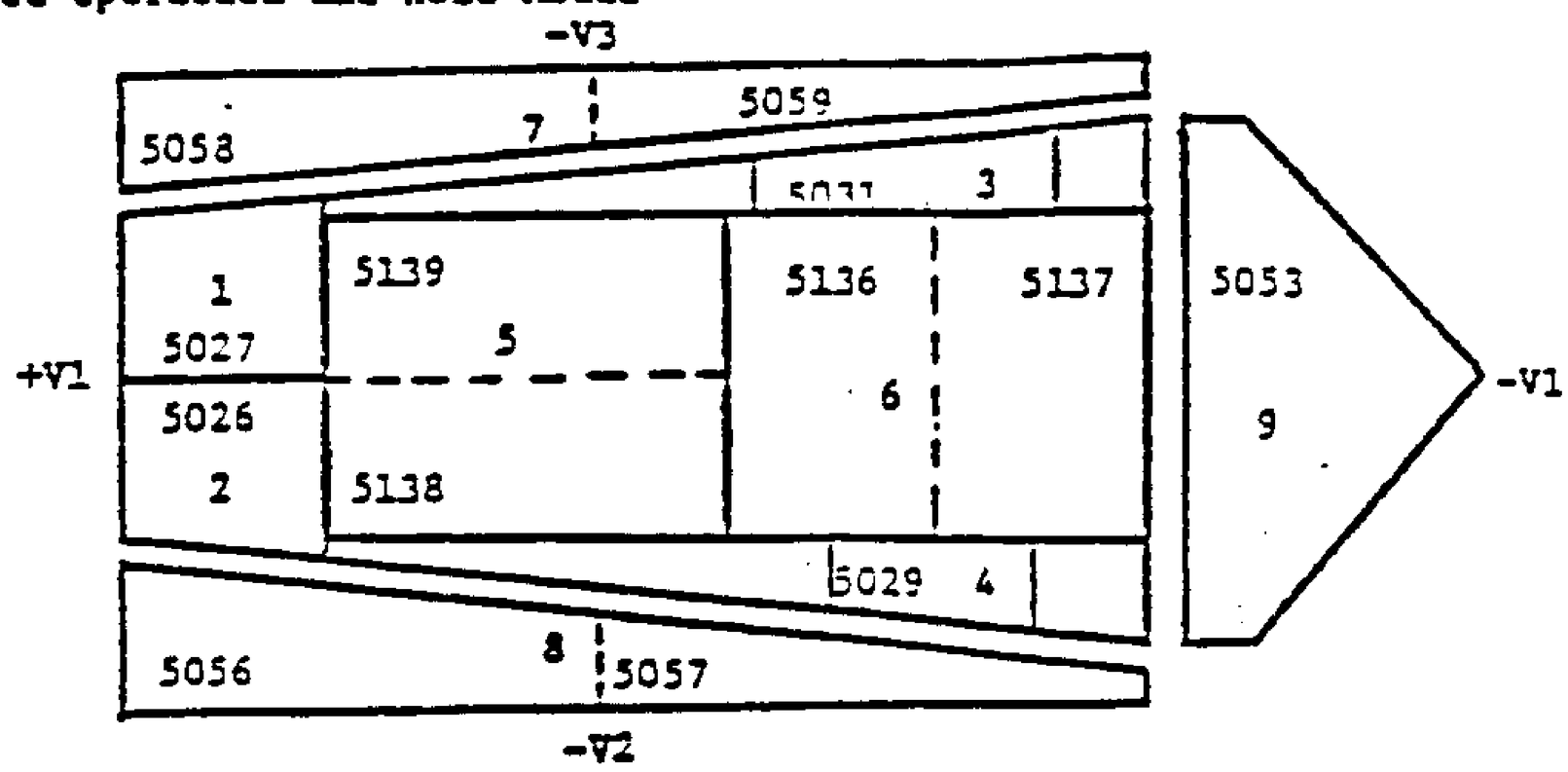

EFFECTIVE SINK TEMPERATURES (°C)

ZONES	FOC NODES	HOT OP.	COLD OP.	COLD HOLD
1	5027	-13	-30	-34
2	5026	-15	-34	-37
3	5031	-14	-32	-36
4	5029	-19	-40	-43
5	5138 5139	-15	-35	-38
6	5136 5137	-16	-36	-40
7	5058 5059	-11	-28	-31
8	5056 5057	-19	-40	-42
9	5053	-4	-17	-22

INTERFACE TEMPERATURES (°C)

ZONES	FOC NODES	HOT OP.	COLD OP.	COLD HOLD	
10	5054	9	-5	-6	Passive Thermal Barrier
11	5055	11	-1	-3	Temperature Controlled Barrier
12	5052	18	9	9	+V1 Temperature Controlled Barrier

(Supersedes pg. 10.3-11 dated 29 June 1984)

DEVIATION APPROVAL REQUEST

1. FOR: [XX] DEVIATION [ ] SUMMARY OF MINOR NONCONFORMANCES

FROM CONTRACTOR: European Space Agency

3. CONTRACT NUMBER:

4. REQUEST NUMBER: FOC-005

5. NOMENCLATURE: Hold Mode Power

6. NUMBER:

7. REVISION: 2

8. DATE: October 1981

9. NONCONFORMANCE: [ ] MINOR [XX] MAJOR

10. MRB ACTION NO.:

11. SERIAL NUMBER(S):

12. LOT NUMBER:

13. QUANTITY:

14. SUPPLIER OR SUBCONTRACTOR (GIVE NAME AND ADDRESS): European Space Agency

15. SPECIFIED REQUIREMENTS:
Section 3.6.1.1.4.2 Thermal power mode constraints of ST-ICD-02C dated 1 April 1980, " "Hold not to exceed 58 Watts/SI average power per orbit including RM"

16. DESCRIPTION OF DEPARTURE FROM REQUIREMENTS:
"Faint Object Camera Hold mode power not to exceed 63 Watts average power per orbit including RM"

This deviation is based on figure 3.6-3 which was included in FOC Deviation DS-001

17. REASON FOR REQUEST AND OR CORRECTIVE ACTION TAKEN: Per agreement of NASA/ESA quarterly 22/23 July: Change of effective sink temperature values applicable to the FOC taking into account latest results of LMSC thermal analysis: 59W and reproduction of thermostat heater system for FOC rvival during deployment: +4W

18. REMARKS:
Initial effective sink temperature table given in ST-ICD-02C pg. 3.6-7 of LMSC document discussed at SI to OTA/SSM IFWG of 10 April 1980 and documented by DAR-DS-002 Effective Sink Temperature (DS/FC/0519/80 dated 30 April 1980.)

19. CONTRACTOR CERTIFICATION: THE CONTRACTOR HEREBY CERTIFIES THAT THE ABOVE DESCRIBED DEVIATION IS A DEPARTURE FROM THE CONTRACTUAL REQUIREMENTS IN THE QUANTITIES AND/OR CONDITIONS AS STATED ABOVE.

[XX] _____ COST ADJUSTMENT (EXPLAIN) Effective Sink Temperature change requires an update of FOC thermal analysis predictions

[ ] NO COST ADJUSTMENT

TITLE _____ SIGNATURE OF AUTHORIZED REPRESENTATIVE _____ DATE _____

20. GOVERNMENT QUALITY ASSURANCE REPRESENTATIVE COMMENTS:

Retyped by MSFC for clarity

TITLE _____ SIGNATURE _____ DATE _____

21. MSFC REVIEW:

ORGANIZATION SYMBOL	REPRESENTATIVE	CONCURRENCE	NON-CONCURRENCE	DATE

22. CONTRACTING OFFICER'S REPRESENTATIVE OR OTHER DULY DELEGATED AUTHORITY:

[ ] DISAPPROVAL (RECOMMENDED)

[ ] APPROVAL (RECOMMENDED)(WITH) (WITHOUT) PRICE ADJUSTMENT. $ _____

SIGNATURE _____ DATE _____

23. CONTRACTING OFFICER:

[ ] APPROVED

[ ] DISAPPROVED

[ ] SUBJECT TO CONDITIONS STATED ON MSFC FORM _____-1.

(Supersedes pg. 10.3-12 dated 29 June 1984)

SIGNATURE _____ DATE _____

MSFC - Form 847 (Rev. May 1969)

DEVIATION APPROVAL REQUEST

1. FOR: [XX] DEVIATION [ ] SUMMARY OF MINOR NONCONFORMANCES

2. FROM CONTRACTOR: Dornier System GMBH, Friedrichshafen

3. CONTRACT NUMBER: 3457/78/NL/SK

4. REQUEST NUMBER: DS-007

5. NOMENCLATURE: SI Generated Ripple & Noise

6. NUMBER:

7. REVISION:

8. DATE: Sept. 9, 1981

9. NONCONFORMANCE: [XX] MINOR [ ] MAJOR

10. MRB ACTION NO.:

11. SERIAL NUMBER(S):

12. LOT NUMBER:

13. QUANTITY:

14. SUPPLIER OR SUBCONTRACTOR (GIVE NAME AND ADDRESS): Dornier System GMBH, Friedrichshafen

15. SPECIFIED REQUIREMENTS:
Section 3.7.9.3 "SI Generated Ripple & Noise" The SI does not generate ripple and noise on any single power bus in excess of the values shown in Fig. 3.7-4. These values apply at 30±0.5V DC.

16. DESCRIPTION OF DEPARTURE FROM REQUIREMENTS:
The FOC generates noise currents on its primary 28 Volts DC power return lines exceeding values specified in Fig. 3.7-4 of ST-ICD-02C in the frequency range from 18 KHz through 600 KHz with a maximum outage of 20 dB at 200 KHz (details see Figure page 3).

17. REASON FOR REQUEST AND/OR CORRECTIVE ACTION TAKEN:
To reduce generated noise levels major design outage would be necessary which at least would cause a severe cost impact and an increase of FOC weight by 0.5 kg. To determine the amount of reduction of noise levels would require extensive analysis and test. (See also page 4).

18. REMARKS:
See page 4

19. CONTRACTOR CERTIFICATION: THE CONTRACTOR HEREBY CERTIFIES THAT THE ABOVE DESCRIBED DEVIATION IS A DEPARTURE FROM THE CONTRACTUAL REQUIREMENTS IN THE QUANTITIES AND/OR CONDITIONS AS STATED ABOVE.

[ ] _____ COST ADJUSTMENT (EXPLAIN)
[XX] NO COST ADJUSTMENT if DAR is approved

_____ TITLE /s/ SIGNATURE OF AUTHORIZED REPRESENTATIVE Sept. 9,1981 DATE

20. GOVERNMENT QUALITY ASSURANCE REPRESENTATIVE COMMENTS:

Retyped by MSFC for clarity

_____ TITLE _____ SIGNATURE _____ DATE

21. MSFC REVIEW:

ORGANIZATION SYMBOL	REPRESENTATIVE	CONCURRENCE	NON-CONCURRENCE	DATE

22. CONTRACTING OFFICER'S REPRESENTATIVE OR OTHER DULY DELEGATED AUTHORITY:
[ ] DISAPPROVAL (RECOMMENDED)
[ ] APPROVAL (RECOMMENDED)(WITH) (WITHOUT) PRICE ADJUSTMENT. $ _____

_____ SIGNATURE _____ DATE

23. CONTRACTING OFFICER:
[ ] APPROVED
[ ] DISAPPROVED
[ ] SUBJECT TO CONDITIONS STATED ON MSFC FORM _____-1.

(Supersedes pg. 10.3-13 dated 29 June 1984)

_____ SIGNATURE _____ DATE

MSFC - Form 347 (Rev. May 1968)

add 17: Reason for request and/or corrective action taken.

The excessive noise current generated by the FOC runs only through the Power Bus Return Line. This current will not generate a noise voltage across the 28 Volts PRIMARY POWER SOURCE IMPEDANCE but return through the ST structure to the FOC, so that this noise current should not affect other ST systems.

add 18: R E M A R K S

Analysis of noise current

The source of the excessive noise current is the Thermal Control Subsystem. This Thermal Control Electronics Unit converts the 28 Volts DC Power into a 4 KHz AC sqarewave signal to supply the FOC heater mats. The square wave signal is pulse width modulated to allow control of the heater power. The TCE DC-Input has a Low Pass Filter Circuit with a choke in the plus line and a line to line capacitor downstream of the choke. The power return line is directly passed through to all heater mats. The heater mats are glued onto the FOC structure and are DC-isolated from the structure. The total capacitance of the heater mats to the structure is in the order of several 10,000 pF. The 4 KHz square wave voltage across the heater mat to structure capacitance results in a noise current from the heater mat through FOC and ST structure to the ST Primary Power Star Point and back through the Primary Power Return Line to the Heater Mat.

Retyped by MSFC for clarity

(Supersedes pg. 10.3-14 dated 29 June 1984)

(Supersedes pg. 10.3-15 dated 29 June 1984)

DEVIATION APPROVAL REQUEST

1. FOR: [XX] DEVIATION [ ] SUMMARY OF MINOR NONCONFORMANCES

2. FROM CONTRACTOR: Dornier System GMBH, Friedrichshafen

3. CONTRACT NUMBER: 3457/78/NL/SK

4. REQUEST NUMBER: DS-005R1

5. NOMENCLATURE: Unscheduled Maintenance and Initial Deployment

6. NUMBER:

7. REVISION: R1

8. DATE: Feb. 19, 1981

9. NONCONFORMANCE: [XX] MINOR [ ] MAJOR

10. MRB ACTION NO.:

11. SERIAL NUMBER(S):

12. LOT NUMBER:

13. QUANTITY:

14. SUPPLIER OR SUBCONTRACTOR (GIVE NAME AND ADDRESS): Dornier Systems

15. SPECIFIED REQUIREMENTS:
Section 3.6.1.2.2.2 and 3.6.1.2.2.3 as stated in ST-ICD-02C dated 10 April 1980

16. DESCRIPTION OF DEPARTURE FROM REQUIREMENTS:
Faint Object Camera
(1) Section 3.6.1.2.2.2 - Replace section with following: In initial deployment the thermostats are powered on within one hour after launch. For first day deployment ST safemode power is available within 7 hours from launch; and for contingency second day deployment, ST safemode power is available within 28 hours from launch. The minimum ST effective sink temperatures are (cont pg. 2)

17. REASON FOR REQUEST AND/OR CORRECTIVE ACTION TAKEN:
Design of high voltage supply units of the FOC inhibits that those units are exposed to a temperature environment of less than -20°C.

18. REMARKS:
FOC STM TB/TV test has demonstrated that during unscheduled maintenance the EHT unit temperature can drop down to -30°C.

19. CONTRACTOR CERTIFICATION: THE CONTRACTOR HEREBY CERTIFIES THAT THE ABOVE DESCRIBED DEVIATION IS A DEPARTURE FROM THE CONTRACTUAL REQUIREMENTS IN THE QUANTITIES AND/OR CONDITIONS AS STATED ABOVE.

[ ] _____ COST ADJUSTMENT (EXPLAIN)
[XX] NO COST ADJUSTMENT

TITLE _____ /s/ SIGNATURE OF AUTHORIZED REPRESENTATIVE Feb 20, 1981 DATE

20. GOVERNMENT QUALITY ASSURANCE REPRESENTATIVE COMMENTS:

Retyped by MSFC for clarity

TITLE _____ SIGNATURE _____ DATE _____

21. MSFC REVIEW:

ORGANIZATION SYMBOL	REPRESENTATIVE	CONCURRENCE	NON-CONCURRENCE	DATE

22. CONTRACTING OFFICER'S REPRESENTATIVE OR OTHER DULY DELEGATED AUTHORITY:
[ ] DISAPPROVAL (RECOMMENDED)
[ ] APPROVAL (RECOMMENDED)(WITH) (WITHOUT) PRICE ADJUSTMENT. $ _____

SIGNATURE _____ DATE _____

23. CONTRACTING OFFICER:
[ ] APPROVED
[ ] DISAPPROVED
[ ] SUBJECT TO CONDITIONS STATED ON MSFC FORM _____-1.

(Supersedes pg. 10.3-16 dated 29 June 1984)

SIGNATURE _____ DATE _____

MSFC - Form 447 (Rev. May 1969)

Item 16 Description of Departure From Requirements (continued)

(1) given in the following table for first day and contingency second day deployment.

FOC DEPLOYMENT EFFECTIVE SINK TEMPERATURE HISTORIES

FIRST DAY			CONTINGENCY SECOND DAY		
Time (Hours)	45° Side	-V1 End	Time (Hours)	45° Side	-V1 End
.0	21.1	21.1	.0	21.1	21.1
1.0	21.1	21.1	1.0	21.1	21.1
2.0	-5.3	7.8	2.0	-5.3	7.8
3.0	-11.2	2.5	3.0	-11.2	2.5
4.0	-15.8	-1.7	4.0	-15.8	-1.7
5.0	-18.1	-4.4	5.0	-18.1	-4.4
6.0	-34.6	-13.4	6.0	-19.4	-6.6
7.0	-40.2	-18.2	7.0	-22.0	-9.0
8.0	-41.3	-21.2	8.0	-22.3	-10.2
9.0	-47.2	-25.2	9.0	-24.0	-12.0
10.0	-47.1	-27.0	10.0	-25.6	-13.5
11.0	-49.4	-29.6	11.0	-25.3	-14.2
12.0	-50.0	-31.7	12.0	-27.0	-15.7
13.0	-50.0	-32.5	13.0	-27.2	-16.4
14.0	-50.0	-35.1	14.0	-27.4	-17.2
15.0	-50.0	-36.2	15.0	-29.3	-18.5
			16.0	-28.2	-18.6
			17.0	-29.5	-19.6
			18.0	-30.3	-20.3
			19.0	-29.4	-20.4
			20.0	-30.8	-21.4
			21.0	-30.6	-21.6
			22.0	-30.6	-22.0
			23.0	-32.2	-22.9
			24.0	-31.1	-22.8
			25.0	-32.0	-23.5
			26.0	-32.4	-23.8
			27.0	-43.5	-29.2
			28.0	-46.1	-31.4
			29.0	-46.6	-33.0
			30.0	-50.0	-35.5
			31.0	-50.0	-36.0
			32.0	-50.0	-38.0
			33.0	-50.0	-39.1
			34.0	-50.0	-39.2

(2) Section 3.6.1.2.2.3 -Delete the entire section dealing with Unscheduled Maintenance.

(Supersedes pg. 10.3-17 dated 29 June 1984)

DEVIATION APPROVAL REQUEST

☐ SUMMARY OF MINOR NONCONFORMANCES

1. FOR: XX DEVIATION

FROM CONTRACTOR: FOC ESA

3. CONTRACT NUMBER:

4. REQUEST NUMBER: DS-003

5. NOMENCLATURE: FOC Generalized mass vs. SI Mode frequency

6. NUMBER:

7. REVISION: R2

8. DATE: Aug. 12, 1981

9. NONCONFORMANCE: XX MINOR ☐ MAJOR

10. MRB ACTION NO.:

11. SERIAL NUMBER(S):

12. LOT NUMBER:

13. QUANTITY:

14. SUPPLIER OR SUBCONTRACTOR (GIVE NAME AND ADDRESS):

European Space Agency

15. SPECIFIED REQUIREMENTS:
Section 3.5.2 of ST-ICD-02C dated 4/10/80
Figure 3.5-3 on pg. 3.5-7

16. DESCRIPTION OF DEPARTURE FROM REQUIREMENTS:
FOC eigen frequencies as a function of the corresponding generalized mass outside specified range:

In orbit case: one eigen frequency

Other cases: three eigen frequencies.
See attachment.

17. REASON FOR REQUEST AND/OR CORRECTIVE ACTION TAKEN:
There is no technical solution known without major design modifications correlated with major impacts on mass, schedule and costs without being completely sure that the specified requirement can be met.

18. REMARKS:
This revision takes into account STM FOC test results, new structural analysis simulating in orbit behaviour and additional information obtained from flight optical bench vibration test.

19. CONTRACTOR CERTIFICATION: THE CONTRACTOR HEREBY CERTIFIES THAT THE ABOVE DESCRIBED DEVIATION IS A DEPARTURE FROM THE CONTRACTUAL REQUIREMENTS IN THE QUANTITIES AND/OR CONDITIONS AS STATED ABOVE.

☐ _____ COST ADJUSTMENT (EXPLAIN)

XX NO COST ADJUSTMENT

TITLE _____ SIGNATURE OF AUTHORIZED REPRESENTATIVE _____ DATE _____

20. GOVERNMENT QUALITY ASSURANCE REPRESENTATIVE COMMENTS:

Retyped by MSFC for clarity

TITLE _____ SIGNATURE _____ DATE _____

21. MSFC REVIEW:

ORGANIZATION SYMBOL	REPRESENTATIVE	CONCURRENCE	NON-CONCURRENCE	DATE

22. CONTRACTING OFFICER'S REPRESENTATIVE OR OTHER DULY DELEGATED AUTHORITY:

☐ DISAPPROVAL (RECOMMENDED)

☐ APPROVAL (RECOMMENDED)(WITH) (WITHOUT) PRICE ADJUSTMENT. $ _____

SIGNATURE _____ DATE _____

23. CONTRACTING OFFICER:

☐ APPROVED

☐ DISAPPROVED

☐ SUBJECT TO CONDITIONS STATED ON MSFC FORM _____-1.

(Supersedes pg. 10.3-18 dated 29 June 1984)

SIGNATURE _____ DATE _____

MSFC - Form 847 (Rev. May 1969)

FOC STRUCTURAL MODES

	EIGEN FREQUENCY	MODAL MASS	DESCRIPTION
In orbit case	36 Hz	121 Kg	Optical bench torsion
	39.4 Hz	90.4 Kg	Load Carrying Structure bottom plate bending
	41.7 Hz	110 Kg	Load Carrying Structure torsion
Other cases	29/30 Hz	110 Kg	Load Carrying Structure torsion
Other cases	35 Hz	90.4 Kg	
	35 Hz	90.4 Kg	Load Carrying Structure bottom plate bending
	36 Hz	121 Kg	Optical bench torsion

Conclusion:

For in orbit case: Only 36 Hz mode is outside ICD curve.

For other cases: All 3 modes are outside ICD curve.

See attached curve

Note that the difference between the behaviour in orbit and for other cases is due to different behaviour of joints and FOC radiator.

(Supersedes pg. 10.3-19 dated 29 June 1984)

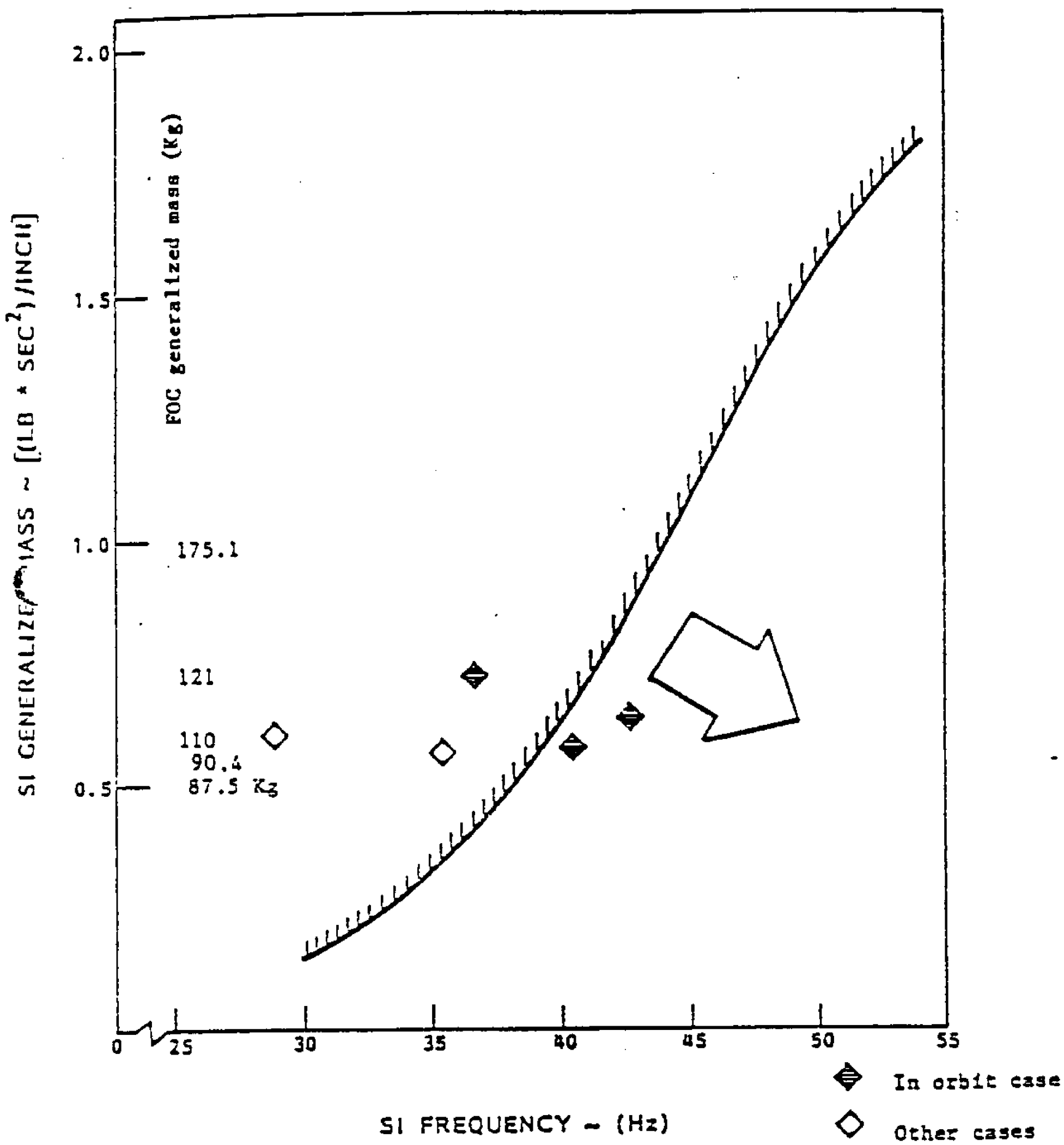

Figure 3.5-3 SI Generalized Mass Vs SI Mode Frequency

(Supersedes pg. 10.3-20 dated 29 June 1984)

DEVIATION APPROVAL REQUEST

1. FOR: [XX] DEVIATION [ ] SUMMARY OF MINOR NONCONFORMANCES

2. FROM CONTRACTOR: Dornier System GMBH, Friedrichshafen

3. CONTRACT NUMBER: 3457/78/NL/SK

4. REQUEST NUMBER: DS-007R1

5. NOMENCLATURE: SI Generated Ripple & Noise

6. NUMBER:

7. REVISION:

8. DATE: Aug. 16, 1983

9. NONCONFORMANCE: [XX] MINOR [ ] MAJOR

10. MRB ACTION NO.:

11. SERIAL NUMBER(S):

12. LOT NUMBER:

13. QUANTITY:

14. SUPPLIER OR SUBCONTRACTOR (GIVE NAME AND ADDRESS): Dornier System GMBH, Friedrichshafen

15. SPECIFIED REQUIREMENTS:
Section 3.7.9.3 "SI Generated Ripple & Noise" The SI does not generate ripple and noise on any single power bus in excess of the values shown in Fig. 3.7-4. These values apply at 30±0.5V DC.

16. DESCRIPTION OF DEPARTURE FROM REQUIREMENTS:
The FOC generates noise currents on its primary 28 Volts DC power return lines exceeding values specified in Fig. 3.7-4 of ST-ICD-02C in the frequency range from 18 KHz through 600 KHz with a maximum outage of 20 dB at 200 KHz (details see Figure page 3).

17. REASON FOR REQUEST AND/OR CORRECTIVE ACTION TAKEN:
To reduce generated noise levels major design change would be necessary which at least would cause a severe cost impact and an increase of FOC weight by 0.5 kg. To determine the amount of reduction of noise levels would require extensive analysis and test. (See also page 2).

18. REMARKS:
See page 2

19. CONTRACTOR CERTIFICATION: THE CONTRACTOR HEREBY CERTIFIES THAT THE ABOVE DESCRIBED DEVIATION IS A DEPARTURE FROM THE CONTRACTUAL REQUIREMENTS IN THE QUANTITIES AND/OR CONDITIONS AS STATED ABOVE.

[ ] _____ COST ADJUSTMENT (EXPLAIN)
[XX] NO COST ADJUSTMENT if DAR is approved

TITLE _____ SIGNATURE OF AUTHORIZED REPRESENTATIVE _____ DATE _____

20. GOVERNMENT QUALITY ASSURANCE REPRESENTATIVE COMMENTS:

Retyped by MSFC for clarity

TITLE _____ SIGNATURE _____ DATE _____

21. MSFC REVIEW:

ORGANIZATION SYMBOL	REPRESENTATIVE	CONCURRENCE	NON-CONCURRENCE	DATE

22. CONTRACTING OFFICER'S REPRESENTATIVE OR OTHER DULY DELEGATED AUTHORITY:
[ ] DISAPPROVAL (RECOMMENDED)
[ ] APPROVAL (RECOMMENDED)(WITH) (WITHOUT) PRICE ADJUSTMENT. $ _____

SIGNATURE _____ DATE _____

23. CONTRACTING OFFICER:
[ ] APPROVED
[ ] DISAPPROVED
[ ] SUBJECT TO CONDITIONS STATED ON MSFC FORM _____-1.

(New Page created by IRN 63)

SIGNATURE _____ DATE _____

MSFC - Form 347 (Rev. May 1969)

add 17: Reason for request and/or corrective action taken.

The excessive noise current generated by the FOC runs only through the Power Bus Return Line. This current will not generate a noise voltage across the 28 Volts PRIMARY POWER SOURCE IMPEDANCE but return through the ST structure to the FOC, so that this noise current should not affect other ST systems.

add 18: R E M A R K S

Analysis of noise current

The source of the excessive noise current is the Thermal Control Subsystem. This Thermal Control Electronics Unit converts the 28 Volts DC Power into a 4 KHz AC sqarewave signal to supply the FOC heater mats. The square wave signal is pulse width modulated to allow control of the heater power. The TCE DC-Input has a Low Pass Filter Circuit with a choke in the plus line and a line to line capacitor downstream of the choke. The power return line is directly passed through to all heater mats. The heater mats are glued onto the FOC structure and are DC-isolated from the structure. The total capacitance of the heater mats to the structure is in the order of several 10,000 pF. The 4 KHz square wave voltage across the heater mat to structure capacitance results in a noise current from the heater mat through FOC and ST structure to the ST Primary Power Star Point and back through the Primary Power Return Line to the Heater Mat.

Retyped by MSFC for clarity

(New Page created by IRN 63)

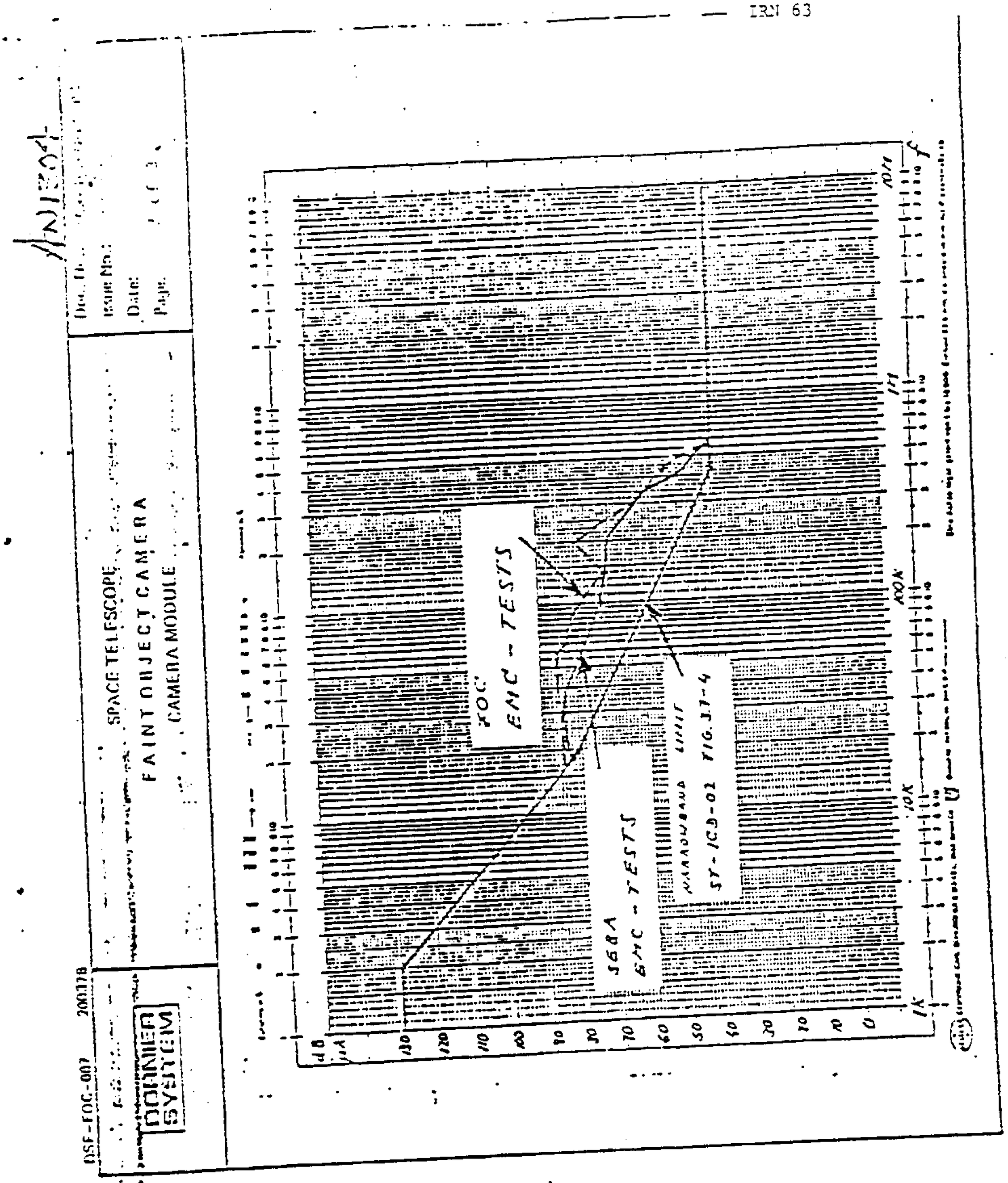

(New Page created by IRN 63)

DEVIATION APPROVAL REQUEST

1. FOR: ☐ DEVIATION ☐ SUMMARY OF MINOR NONCONFORMANCES

2. FROM CONTRACTOR:	3. CONTRACT NUMBER:	4. REQUEST NUMBER:
European Space Agency		FOC-011

5. NOMENCLATURE:	6. NUMBER:	7. REVISION:	8. DATE:
Hold Mode Power			

9. NONCONFORMANCE:	10. MRB ACTION NO.:	11. SERIAL NUMBER(S):	12. LOT NUMBER:	13. QUANTITY:
☐ MINOR ☒ MAJOR				

14. SUPPLIER OR SUBCONTRACTOR (GIVE NAME AND ADDRESS):

15. SPECIFIED REQUIREMENTS:

DAR-FOC-005 dated October 1981 introduced as IRN 40 on 10 March 1982 with respect to section 3.6.1.1.4.2 of ST-ICD-02C.
"Faint Object Camera Hold Mode Power not to exceed 63 watts average per orbit including RM"

16. DESCRIPTION OF DEPARTURE FROM REQUIREMENTS:

The measured FOC hold mode power is above specification. The following deviation is requested.
"Faint Object Camera Hold Mode Power not to exceed 70 watts average power per orbit including RM. This deviation is based on figure 3.6.3 which was included in FOC DAR-DS-001"

17. REASON FOR REQUEST AND/OR CORRECTIVE ACTION TAKEN:

see attached sheet

18. REMARKS.

19. CONTRACTOR CERTIFICATION: THE CONTRACTOR HEREBY CERTIFIES THAT THE ABOVE DESCRIBED DEVIATION IS A DEPARTURE FROM THE CONTRACTUAL REQUIREMENTS IN THE QUANTITIES AND/OR CONDITIONS AS STATED ABOVE.

☐ _____ COST ADJUSTMENT (EXPLAIN)
☐ NO COST ADJUSTMENT

TITLE _____ SIGNATURE OF AUTHORIZED REPRESENTATIVE _____ DATE _____

20. GOVERNMENT QUALITY ASSURANCE REPRESENTATIVE COMMENTS:

TITLE _____ SIGNATURE _____ DATE _____

21. MSFC REVIEW:

ORGANIZATION SYMBOL	REPRESENTATIVE	CONCURRENCE	NON-CONCURRENCE	DATE

22. CONTRACTING OFFICER'S REPRESENTATIVE OR OTHER DULY DELEGATED AUTHORITY:

☐ DISAPPROVAL (RECOMMENDED)
☐ APPROVAL (RECOMMENDED)(WITH) (WITHOUT) PRICE ADJUSTMENT. $ _____

SIGNATURE _____ DATE _____

23. CONTRACTING OFFICER:

☐ APPROVED
☐ DISAPPROVED
☐ SUBJECT TO CONDITIONS STATED ON MSFC FORM _____-1.

(New Page created by IRN 73)

SIGNATURE _____ DATE _____

MSFC - Form 847 (Rev. May 1969)

Deviation Approval Request (Con't)

17. Reasons for change and/or corrective actions taken.

a) Reason for change

As demonstrated during the FOC TB/TV test 1 of May 1982, the FOC power consumption during Cold Hold Mode exceeded the specifications. The measured figure was 75 watts but the corrected figure to cover the in flight condition was 80 watts. These corrections reflect an increase of power to PDA platform to stop thermostats cycling and a correction from test conditions to ICD sink temperatures.

b) Corrective actions taken

Subsequent to this test an extensive investigation was carried out and from this a number of design changes have been established to reduce heat leaks. These design changes will result in a reduction of the FOC Hold Mode Power to 70 watts. No further cost or schedule effective changes have been found.

An updated FOC thermal mathematical model will be provided at the end of January 1983.

(New Page created by IRN 73)

DEVIATION APPROVAL REQUEST

1. FOR: [XX] DEVIATION [ ] SUMMARY OF MINOR NONCONFORMANCES

2. FROM CONTRACTOR:	3. CONTRACT NUMBER:	4. REQUEST NUMBER:
European Space Agency	-	FOC-001R1

5. NOMENCLATURE:	6. NUMBER:	7. REVISION:	8. DATE:
FOC Weight Limit			22 Sept. 1980

9. NONCONFORMANCE:	10. MRB ACTION NO.:	11. SERIAL NUMBER(S):	12. LOT NUMBER:	13. QUANTITY:
[ ] MINOR [XX] MAJOR				

14. SUPPLIER OR SUBCONTRACTOR (GIVE NAME AND ADDRESS):

15. SPECIFIED REQUIREMENTS:

Section 3.5.3.1 of ST-ICD-02 dated 10 Apl. 80.

Weight The maximum weight of any single axial SI is 700 lbs (318 kg).

16. DESCRIPTION OF DEPARTURE FROM REQUIREMENTS:

Faint Object Camera
The projected weight of the FOC is above specification. A deviation is requested to increase the FOC maximum weight up to 708 lb. (322 kg).

17. REASON FOR REQUEST AND/OR CORRECTIVE ACTION TAKEN:

Due to technical problems and new interface requirements the projected weight of the FOC is above specification. See PS/8413/JJB/Y of 22nd Sept. 80 for full justification.

18. REMARKS:

19. CONTRACTOR CERTIFICATION: THE CONTRACTOR HEREBY CERTIFIES THAT THE ABOVE DESCRIBED DEVIATION IS A DEPARTURE FROM THE CONTRACTUAL REQUIREMENTS IN THE QUANTITIES AND/OR CONDITIONS AS STATED ABOVE.

[ ] _____ COST ADJUSTMENT (EXPLAIN)
[ ] NO COST ADJUSTMENT

TITLE _____ SIGNATURE OF AUTHORIZED REPRESENTATIVE _____ DATE _____

20. GOVERNMENT QUALITY ASSURANCE REPRESENTATIVE COMMENTS:

Retyped by MSFC for clarity

TITLE _____ SIGNATURE _____ DATE _____

21. MSFC REVIEW:

ORGANIZATION SYMBOL	REPRESENTATIVE	CONCURRENCE	NON-CONCURRENCE	DATE

22. CONTRACTING OFFICER'S REPRESENTATIVE OR OTHER DULY DELEGATED AUTHORITY:

[ ] DISAPPROVAL (RECOMMENDED)
[ ] APPROVAL (RECOMMENDED)(WITH) (WITHOUT) PRICE ADJUSTMENT. $ _____

SIGNATURE _____ DATE _____

23. CONTRACTING OFFICER:

[ ] APPROVED
[ ] DISAPPROVED
[ ] SUBJECT TO CONDITIONS STATED ON MSFC FORM _____-1.

(New Page created by IRN 74)

SIGNATURE _____ DATE _____

MSFC - Form 347 (Rev. May 1969)

DEVIATION APPROVAL REQUEST

1. FOR: [XX] ~~DEVIATION~~ Waiver [ ] SUMMARY OF MINOR NONCONFORMANCES

2. FROM ~~XXXXXXXXX~~
D.L. Fortna, GSFC Code/302

3. CONTRACT NUMBER: 3457/78/82/sk

4. REQUEST NUMBER: FOC-015

5. NOMENCLATURE: SI Generated Radiated Electric Field Emissions

6. NUMBER: ST-ICD-02

7. REVISION:

8. DATE: 12-3-84

9. NONCONFORMANCE: [XX] MINOR [ ] MAJOR

10. MRB ACTION NO.:

11. SERIAL NUMBER(S):

12. LOT NUMBER:

13. QUANTITY:

14. SUPPLIER OR SUBCONTRACTOR (GIVE NAME AND ADDRESS):
ESA

15. SPECIFIED REQUIREMENTS:
See attachment

16. DESCRIPTION OF DEPARTURE FROM REQUIREMENTS:
See attachment

17. REASON FOR REQUEST AND/OR CORRECTIVE ACTION TAKEN:
See attachment

18. REMARKS:

19. CONTRACTOR CERTIFICATION: THE CONTRACTOR HEREBY CERTIFIES THAT THE ABOVE DESCRIBED DEVIATION IS A DEPARTURE FROM THE CONTRACTUAL REQUIREMENTS IN THE QUANTITIES AND/OR CONDITIONS AS STATED ABOVE.

[ ] _____ COST ADJUSTMENT (EXPLAIN)
[ ] NO COST ADJUSTMENT

TITLE _____ SIGNATURE OF AUTHORIZED REPRESENTATIVE _____ DATE _____

20. GOVERNMENT QUALITY ASSURANCE REPRESENTATIVE COMMENTS:
Retyped by MSFC for clarity

TITLE _____ SIGNATURE _____ DATE _____

21. MSFC REVIEW:

ORGANIZATION SYMBOL	REPRESENTATIVE	CONCURRENCE	NON-CONCURRENCE	DATE

22. CONTRACTING OFFICER'S REPRESENTATIVE OR OTHER DULY DELEGATED AUTHORITY:
[ ] DISAPPROVAL (RECOMMENDED)
[ ] APPROVAL (RECOMMENDED)(WITH) (WITHOUT) PRICE ADJUSTMENT. $ _____

SIGNATURE _____ DATE _____

23. CONTRACTING OFFICER:
[ ] APPROVED
[ ] DISAPPROVED
[ ] SUBJECT TO CONDITIONS STATED ON MSFC FORM _____-1.

(New page created by IRN 79)

SIGNATURE _____ DATE _____

MSFC - Form 847 (Rev. May 1969)

15. Specified Requirements

ST-ICD-02

Para. 3.7.9.8 Radiated Elective Field Emissions

16. Description of Departure from Requirements

NB radiated emissions exceeded the ICD limits from 3 MHz to 50 MHz by as much as 30db in the science data transfer mode which occurs at the end of each science exposure.

NB radiated emissions also exceeded the ICD limits from 20 KHz to 350 KHz by as much as 20db. These emissions are always present when the FOC is powered on.

Refer to the attached plot for details on both emissions.

17. Reason for Request

New requirement (PCN AN1469) introduced into the program after the FOC EMC tests were completed. Corrective action would require major disassembly of the instrument to pin point the source of the emissions. It would probably require modification to the harnesses and components to add additional shielding to cables and possibly EMI filters to components. This effort would be very expensive and cause long delays in the availability of the instrument for integration into the ST spacecraft.

(New page created by IRN 79)

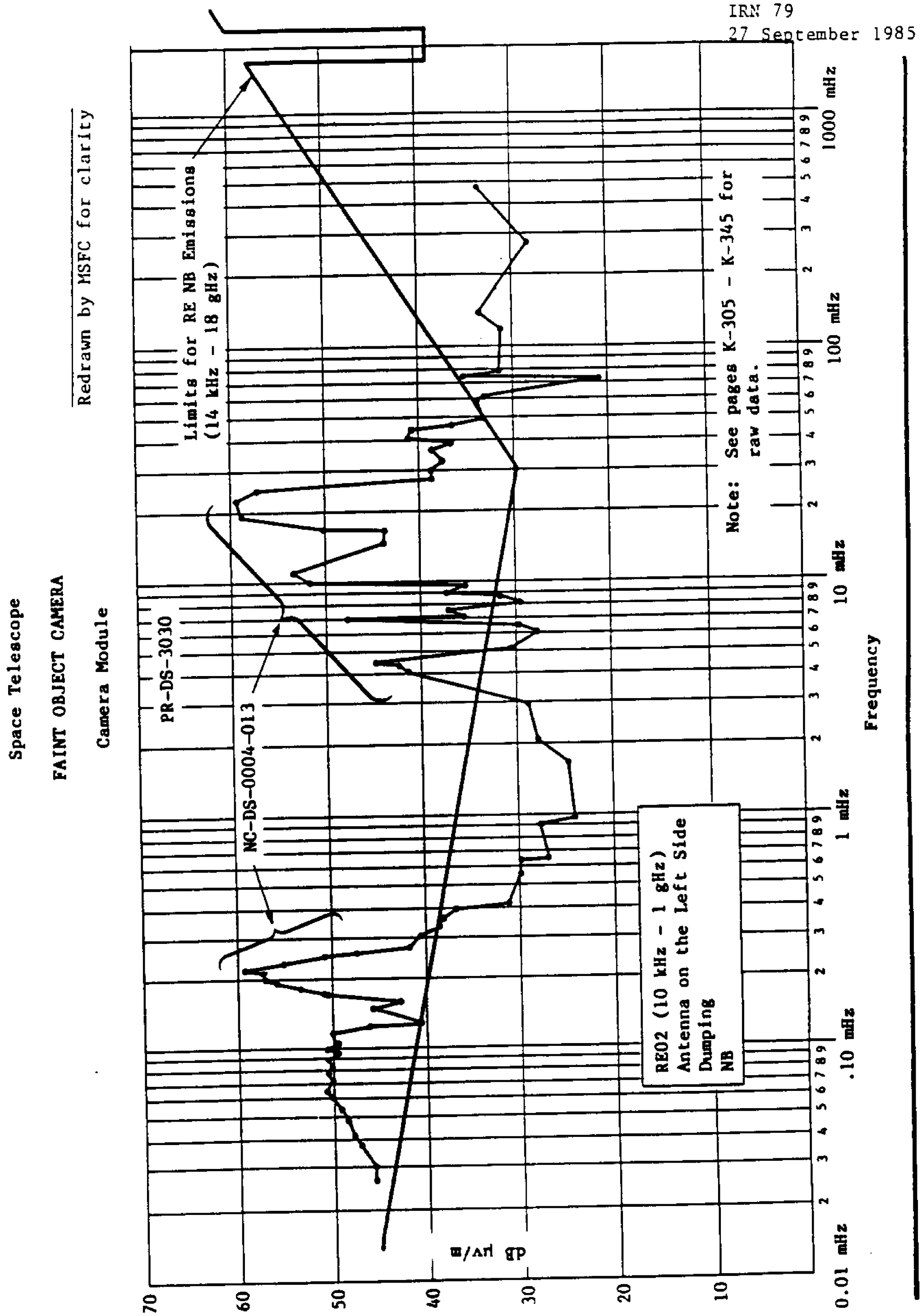

(New Page created by IRN 79)

DEVIATION APPROVAL REQUEST

1. FOR [X] DEVIATION [ ] SUMMARY OF MINOR NONCONFORMANCES

LMSC RELEASED CONTROLLED

2. FROM CONTRACTOR:	3. CONTRACT NUMBER	4. REQUEST NUMBER
ESA	---	DAR-FOC-016

5. NOMENCLATURE:	6. NUMBER:	7. REVISION:	8. DATE:
Bus Voltage Drop Out	DAR-FOC-016	---	22 April 1987

9. NONCONFORMANCE:	10. MRB ACTION NO.:	11. SERIAL NUMBER(S):	12. LOT NUMBER:	13. QUANTITY:
[X] MINOR [ ] MAJOR				

14. SUPPLIER OR SUBCONTRACTOR (GIVE NAME AND ADDRESS):

15. SPECIFIED REQUIREMENTS:

Section 3.7.9.6 Survival.

The SI must survive power interruptions up to 500 milliseconds duration, assuming diode isolation between power source and SI.

16. DESCRIPTION OF DEPARTURE FROM REQUIREMENTS:

FOC being in OPERATE MODE or TRANSITIONING to or from the OPERATE MODE, may not survive a power interrupt, if power is reapplied without previous relay reconfiguration. See also CARD section 2.4.2.18, POWER ON AFTER POWER LOSS (CCR 1729).

17. REASON FOR REQUEST AND/OR CORRECTIVE ACTION TAKEN:

A modification of the FOC-Safing-Function, which would protect the FOC from being damaged, would require major changes in the project data base, in addition extensive additional testing would be required.

18. REMARKS:

1) It was verbally explained by LMSC, that the likelihood of a voltage drop out is close to zero.

2) See attached constraint.

19. CONTRACTOR CERTIFICATION: THE CONTRACTOR HEREBY CERTIFIES THAT THE ABOVE DESCRIBED DEVIATION IS A DEPARTURE FROM THE CONTRACTUAL REQUIREMENTS IN THE QUANTITIES AND/OR CONDITIONS AS STATED ABOVE.

[ ] _____ COST ADJUSTMENT (EXPLAIN)

[X] NO COST ADJUSTMENT

ESA Space Telescope Project Manager (TITLE) — R.J. Lawrance (SIGNATURE OF AUTHORIZED REPRESENTATIVE) — 6 May 87 (DATE)

20. GOVERNMENT QUALITY ASSURANCE REPRESENTATIVE COMMENTS:

TITLE — SIGNATURE — DATE

21. MSFC REVIEW:

ORGANIZATION SYMBOL	REPRESENTATIVE	CONCURRENCE	NON-CONCURRENCE	DATE

22. CONTRACTING OFFICER'S REPRESENTATIVE OR OTHER DULY DELEGATED AUTHORITY:

[ ] DISAPPROVAL (RECOMMENDED)

[ ] APPROVAL (RECOMMENDED) (WITH) (WITHOUT) PRICE ADJUSTMENT. $ _____

SIGNATURE — DATE

23. CONTRACTING OFFICER:

[X] APPROVED

[ ] DISAPPROVED

[ ] SUBJECT TO CONDITIONS STATED ON MSFC FORM _____ -1.

Elizabeth Cantin — 11/5/87

SIGNATURE — DATE

MSFC Form 1117 (Rev Mar 1988)

15

ST-ICD-02E
29 June 1984
IRN 94
21 July 1988

DEVIATION APPROVAL REQUEST

FOR: [X] ~~DEVIATION~~ Waiver [ ] SUMMARY OF MINOR NONCONFORMANCES

2. FROM ~~CONTRACTOR~~	3. CONTRACT NUMBER:	4. REQUEST NUMBER:
European Space Agency	3457/78/82/sk	FOC-[redacted] 017

5. NOMENCLATURE:	6. NUMBER:	7. REVISION:	8. DATE:
Connector location	ST-ICD-02	E	29 June 1984

9. NONCONFORMANCE:	10. MRB ACTION NO.:	11. SERIAL NUMBER(S):	12. LOT NUMBER:	13. QUANTITY:
[X] MINOR [ ] MAJOR				

14. SUPPLIER OR SUBCONTRACTOR (GIVE NAME AND ADDRESS):

ESA

15. SPECIFIED REQUIREMENTS:

Fig. 3.3-16 requires the keyways to be located at 90° ± 45° to the P1 direction

16. DESCRIPTION OF DEPARTURE FROM REQUIREMENTS.

Keyways are located within ± 45° of the P1 direction

LMSC RELEASED CONTROLLED

17. REASON FOR REQUEST AND/OR CORRECTIVE ACTION TAKEN:

Build error

18. REMARKS.

Correction of the error would involve excessive rework and retest at this stage and it is proposed to "use as is". The only confusion would occur in orbit if the cables were disconnected and needed to be reconnected. Operations instructions could warn the astronauts in this case.

19. CONTRACTOR CERTIFICATION: THE CONTRACTOR HEREBY CERTIFIES THAT THE ABOVE DESCRIBED DEVIATION IS A DEPARTURE FROM THE CONTRACTUAL REQUIREMENTS IN THE QUANTITIES AND/OR CONDITIONS AS STATED ABOVE.

[ ] _____ COST ADJUSTMENT (EXPLAIN)
[X] NO COST ADJUSTMENT

R.J. Laurance 30 Nov 87

Project Manager (TITLE) — R.J. Laurance (SIGNATURE OF AUTHORIZED REPRESENTATIVE) — _____ (DATE)

20. GOVERNMENT QUALITY ASSURANCE REPRESENTATIVE COMMENTS:

_____ (TITLE) — _____ (SIGNATURE) — _____ (DATE)

21. MSFC REVIEW:

ORGANIZATION SYMBOL	REPRESENTATIVE	CONCURRENCE	NON-CONCURRENCE	DATE

22. CONTRACTING OFFICER'S REPRESENTATIVE OR OTHER DULY DELEGATED AUTHORITY:

[ ] DISAPPROVAL (RECOMMENDED)
[ ] APPROVAL (RECOMMENDED) (WITH) (WITHOUT) PRICE ADJUSTMENT. $ _____.

23. CONTRACTING OFFICER:

[ ] APPROVED
[ ] DISAPPROVED
[ ] SUBJECT TO CONDITIONS STATED ON MSFC FORM _____ 1.

_____ (TITLE) — _____ (SIGNATURE) — _____ (DATE)

FC-Form [illegible] (Rev [illegible])

PAGE

10.4 HSP Deviations and Waivers

The High Speed Photometer (HSP), STE-05, is relieved from the requirements of this ICD to the extent shown on the NASA approved University of Wisconsin deviation and waiver requests listed below and included on the following pages. 10.4-1

10.4.1 Ground Strap Receptacle Mounting, Deviation No. HSP-001. 10.4-2

10.4.2 HSP Susceptibility Level, Deviation No. HSP-002 10.4-4 IRN 76

10.4.3 HSP Generated Ripple and Noise, Waiver (No number assigned) 10.4-5 IRN 88

10.4.4 HSP Minimum Radius, Deviation No. HSP-003 10.4-6 IRN 95

(Supersedes pg. 10.4-1 dated 09 May 1986)

ST-ICD-02E
27 August 1984
Admin. Change

DEVIATION APPROVAL REQUEST

1. FOR: [XX] DEVIATION [ ] SUMMARY OF MINOR NONCONFORMANCES

2. FROM CONTRACTOR:	3. CONTRACT NUMBER:	4. REQUEST NUMBER:
ST/HSP, University of Wisconsin	NAS5-24487	HSP-DAR-001

5. NOMENCLATURE:	6. NUMBER:	7. REVISION:	8. DATE:

9. NONCONFORMANCE:	10. MRB ACTION NO.:	11. SERIAL NUMBER(S):	12. LOT NUMBER:	13. QUANTITY:
[XX] MINOR [ ] MAJOR				

14. SUPPLIER OR SUBCONTRACTOR (GIVE NAME AND ADDRESS):

University of Wisconsin

15. SPECIFIED REQUIREMENTS:

Para. 3.3.9-1 Ground Strap Location
Configure ground strap receptacle as illustrated in Figure 3.3-16 (ref. PIRN 2130R2)

16. DESCRIPTION OF DEPARTURE FROM REQUIREMENTS:

1) Open up the two receptacle mounting holes from 0.063 in. to 0.129 in. in order to accommodate an 1/8 in. rivet.

2) Orient the receptacle 90° from the positic indicated in Figure 3.3-16.

17. REASON FOR REQUEST AND/OR CORRECTIVE ACTION TAKEN:

To minimize impact to existing hardware.

18. REMARKS:

19. CONTRACTOR CERTIFICATION: THE CONTRACTOR HEREBY CERTIFIES THAT THE ABOVE DESCRIBED DEVIATION IS A DEPARTURE FROM THE CONTRACTUAL REQUIREMENTS IN THE QUANTITIES AND/OR CONDITIONS AS STATED ABOVE.

[ ] _____ COST ADJUSTMENT (EXPLAIN)

[XX] NO COST ADJUSTMENT

HSP Inst. manager	/s/Evan E. Richards	4-2-81
TITLE	SIGNATURE OF AUTHORIZED REPRESENTATIVE	DATE

20. GOVERNMENT QUALITY ASSURANCE REPRESENTATIVE COMMENTS:

Approval is recommended based upon a riview of correspondance between LMSC & U of WS ST/HSP Group.

Office of Naval Research
Head, Eng. Sup. Office /s/D.C.Byrd 4-2-81
TITLE SIGNATURE DATE

21. MSFC REVIEW:

ORGANIZATION SYMBOL	REPRESENTATIVE	CONCURRENCE	NON-CONCURRENCE	DATE

22. CONTRACTING OFFICER'S REPRESENTATIVE OR OTHER DULY DELEGATED AUTHORITY:

[ ] DISAPPROVAL (RECOMMENDED)
[ ] APPROVAL (RECOMMENDED)(WITH) (WITHOUT) PRICE ADJUSTMENT. $ _____

SIGNATURE DATE

23. CONTRACTING OFFICER:

[ ] APPROVED
[ ] DISAPPROVED
[ ] SUBJECT TO CONDITIONS STATED ON MSFC FORM _____-1.

(Supersedes pg. 10.4-2 dated 29 June 1984)

SIGNATURE DATE

MSFC - Form 847 (Rev. May 1969)

DEVIATION APPROVAL REQUEST

1. FOR: [XX] DEVIATION [ ] SUMMARY OF MINOR NONCONFORMANCES

2. FROM CONTRACTOR:	3. CONTRACT NUMBER:	4. REQUEST NUMBER:
ST/HSP University of Wisconsin	NAS5-24487	HSP-DAR-002

5. NOMENCLATURE:	6. NUMBER:	7. REVISION:	8. DATE:
			18 Oct 1984

9. NONCONFORMANCE:	10. MRB ACTION NO.:	11. SERIAL NUMBER(S):	12. LOT NUMBER:	13. QUANTITY:
[XX] MINOR [ ] MAJOR				

14. SUPPLIER OR SUBCONTRACTOR (GIVE NAME AND ADDRESS):

University of Wisconsin - Space Science and Engineering Center
1225 W. Dayton Street, Madison, Wisconsin 53706

15. SPECIFIED REQUIREMENTS:	16. DESCRIPTION OF DEPARTURE FROM REQUIREMENTS:
Para. 3.7.9.7 Radiated Susceptibility (E-Field) requires 1 volt/meter over frequency range 35 MHz to 1 GHz.	HSP Susceptibility level is 0.36 v/m at 45 MHz and 171-172 MHz.

17. REASON FOR REQUEST AND/OR CORRECTIVE ACTION TAKEN:

The observed degree of susceptibility is only slightly below the ICD levels and in very narrow frequency ranges. Any reasonable effort to correct this departure would result in severe cost and schedule impacts.

18. REMARKS:

19. CONTRACTOR CERTIFICATION: THE CONTRACTOR HEREBY CERTIFIES THAT THE ABOVE DESCRIBED DEVIATION IS A DEPARTURE FROM THE CONTRACTUAL REQUIREMENTS IN THE QUANTITIES AND/OR CONDITIONS AS STATED ABOVE.

[ ] _____ COST ADJUSTMENT (EXPLAIN)
[XX] NO COST ADJUSTMENT

HSP Chief Engineer	/s/ J.C. Sitzman	10/18/84
TITLE	SIGNATURE OF AUTHORIZED REPRESENTATIVE	DATE

20. GOVERNMENT QUALITY ASSURANCE REPRESENTATIVE COMMENTS:

Retyped by MSFC for clarity

TITLE	SIGNATURE	DATE

21. MSFC REVIEW:

ORGANIZATION SYMBOL	REPRESENTATIVE	CONCURRENCE	NON-CONCURRENCE	DATE

22. CONTRACTING OFFICER'S REPRESENTATIVE OR OTHER DULY DELEGATED AUTHORITY:

[ ] DISAPPROVAL (RECOMMENDED)
[ ] APPROVAL (RECOMMENDED) (WITH) (WITHOUT) PRICE ADJUSTMENT. $ _____

SIGNATURE _____ DATE _____

23. CONTRACTING OFFICER:

[ ] APPROVED
[ ] DISAPPROVED
[ ] SUBJECT TO CONDITIONS STATED ON MSFC FORM _____

(New Page created by IRN 76)

SIGNATURE _____ DATE _____

MSFC - Form 847 (Rev. May 1969)

DEVIATION APPROVAL REQUEST

1. FOR: [XX] ~~XXXXXXXX~~ Waiver [ ] SUMMARY OF MINOR NONCONFORMANCES

2. FROM CONTRACTOR:	3. CONTRACT NUMBER:	4. REQUEST NUMBER:
ndy Barr - GSFC Instrument Manager	NAS5-24487	CCR 1166 STP-G PIRN 2219

5. NOMENCLATURE:	6. NUMBER:	7. REVISION:	8. DATE:
ST - HSP			12-6-85 Rev. 7-15-85

9. NONCONFORMANCE:	10. MRB ACTION NO.:	11. SERIAL NUMBER(S):	12. LOT NUMBER:	13. QUANTITY:
[XX] MINOR [ ] MAJOR				

14. SUPPLIER OR SUBCONTRACTOR (GIVE NAME AND ADDRESS):
University of Wisconsin - Space Science and Engineering Center
1225 W. Dayton Street, Madison, Wisconsin 53706

15. SPECIFIED REQUIREMENTS:	16. DESCRIPTION OF DEPARTURE FROM REQUIREMENTS:
ST-ICD-02 para. 3.7.9.3 Generated Ripple & Noise	Broadband transient conducted emissions on the power lines generated by the operation of the heater relays exceeded the ICD limits from 0.5 MHz to 16 MHz. The highest observed transient level was 42 dB above specifications at 1.6 MHz.

17. REASON FOR REQUEST AND/OR CORRECTIVE ACTION TAKEN:
Corrective action would require installing additional filters in the power lines. This would be costly and could interfer with the HST integration efforts at LMSC. Adding filter elements could require some environmental retesting of the Instrument, particularly vibration and T/U. Thermal studies show that the heater relay will be operated at a frequency of less than once per orbit.

REMARKS:

19. CONTRACTOR CERTIFICATION: THE CONTRACTOR HEREBY CERTIFIES THAT THE ABOVE DESCRIBED DEVIATION IS A DEPARTURE FROM THE CONTRACTUAL REQUIREMENTS IN THE QUANTITIES AND/OR CONDITIONS AS STATED ABOVE.

[ ] _____ COST ADJUSTMENT (EXPLAIN)
[ ] NO COST ADJUSTMENT

TITLE _____ SIGNATURE OF AUTHORIZED REPRESENTATIVE _____ DATE _____

20. GOVERNMENT QUALITY ASSURANCE REPRESENTATIVE COMMENTS:

Retyped by MSFC for clarity

TITLE _____ SIGNATURE _____ DATE _____

21. MSFC REVIEW:

ORGANIZATION SYMBOL	REPRESENTATIVE	CONCURRENCE	NON-CONCURRENCE	DATE

22. CONTRACTING OFFICER'S REPRESENTATIVE OR OTHER DULY DELEGATED AUTHORITY:

[ ] DISAPPROVAL (RECOMMENDED)
[ ] APPROVAL (RECOMMENDED)(WITH) (WITHOUT) PRICE ADJUSTMENT. $ _____

(New Page created by IRN 88)

23. CONTRACTING OFFICER:

[X] APPROVED
[ ] DISAPPROVED
[ ] SUBJECT TO CONDITIONS STATED ON MSFC FORM _____-1.

/s/ Elizabeth Austin — SIGNATURE
10/28/85 — DATE

MSFC - Form 847 (Rev. May 1969)

ST-ICD-02E
29 June 1984
IRN 95
23 September

DEVIATION APPROVAL REQUEST

1. FOR: [X] DEVIATION — PCN: AN3274 (Ref: GSFC CCR 2037) — [ ] SUMMARY OF MINOR NONCONFORMANCES

2. FROM CONTRACTOR:	3. CONTRACT NUMBER:	4. REQUEST NUMBER:
University of Wisconsin, Madison, WI	NAS5-24487	HSP-DAR-003

5. NOMENCLATURE:	6. NUMBER:	7. REVISION:	8. DATE:
MINIMUM RADIUS		Original	

9. NONCONFORMANCE:	10. MRB ACTION NO.:	11. SERIAL NUMBER(S):	12. LOT NUMBER:	13. QUANTITY:
[XX] MINOR [ ] MAJOR				

14. SUPPLIER OR SUBCONTRACTOR (GIVE NAME AND ADDRESS):

University of Wisconsin, 1225 W. Dayton St., Madison, WI 53706

15. SPECIFIED REQUIREMENTS:

ST-ICD-02, Para. 3.3.8.1 requires external 2 plane edges to have 0.12" minimum radius and 3 plane corners to have 0.25" minimum radius.

16. DESCRIPTION OF DEPARTURE FROM REQUIREMENTS:

HSP has six 3 plane corners with approximatel 3/16" radius (just under the 0.25" required) and 2 plane edges with approximately 0.06 to 0.09" radius (just under the 0.12 required). See attached sketch for locations.

LMSC RELEASED CONTROLLED

17. REASON FOR REQUEST AND/OR CORRECTIVE ACTION TAKEN:

HSP inspected in August 1987 - Some radii do not meet ICD requirement

18. REMARKS:

All corners and edges are smooth and do not appear to represent a hazard. Based on Hernandez Engineering Inc.,Report SN-G097-021988PM, dated 2/19/88, and GSFC Safety Office, the sharp edges and corners are not a safety concern; therefore, it is recommended to "use as is".

19. CONTRACTOR CERTIFICATION: THE CONTRACTOR HEREBY CERTIFIES THAT THE ABOVE DESCRIBED DEVIATION IS A DEPARTURE FROM THE CONTRACTUAL REQUIREMENTS IN THE QUANTITIES AND/OR CONDITIONS AS STATED ABOVE.

[ ] _____ COST ADJUSTMENT (EXPLAIN)

[X] NO COST ADJUSTMENT

HSP Program Manager — /s/ Evan E. Richards — _____

TITLE — SIGNATURE OF AUTHORIZED REPRESENTATIVE — DATE

20. GOVERNMENT QUALITY ASSURANCE REPRESENTATIVE COMMENTS:

NOTE: DAR HSP-003 retyped for clarity in transmission and documentation incorporation by MSFC/HST Change Control.

TITLE — SIGNATURE — DATE

21. MSFC REVIEW:

ORGANIZATION SYMBOL	REPRESENTATIVE	CONCURRENCE	NON-CONCURRENCE	DATE

22. CONTRACTING OFFICER'S REPRESENTATIVE OR OTHER DULY DELEGATED AUTHORITY:

[ ] DISAPPROVAL (RECOMMENDED)

[ ] APPROVAL (RECOMMENDED)(WITH) (WITHOUT) PRICE ADJUSTMENT. $ _____

SIGNATURE — DATE

23. CONTRACTING OFFICER:

[ ] APPROVED

[ ] DISAPPROVED

[ ] SUBJECT TO CONDITIONS STATED ON MSFC FORM _____-1.

SIGNATURE — DATE

MSFC - Form 847 (Rev. May 1969)

ORIGINAL

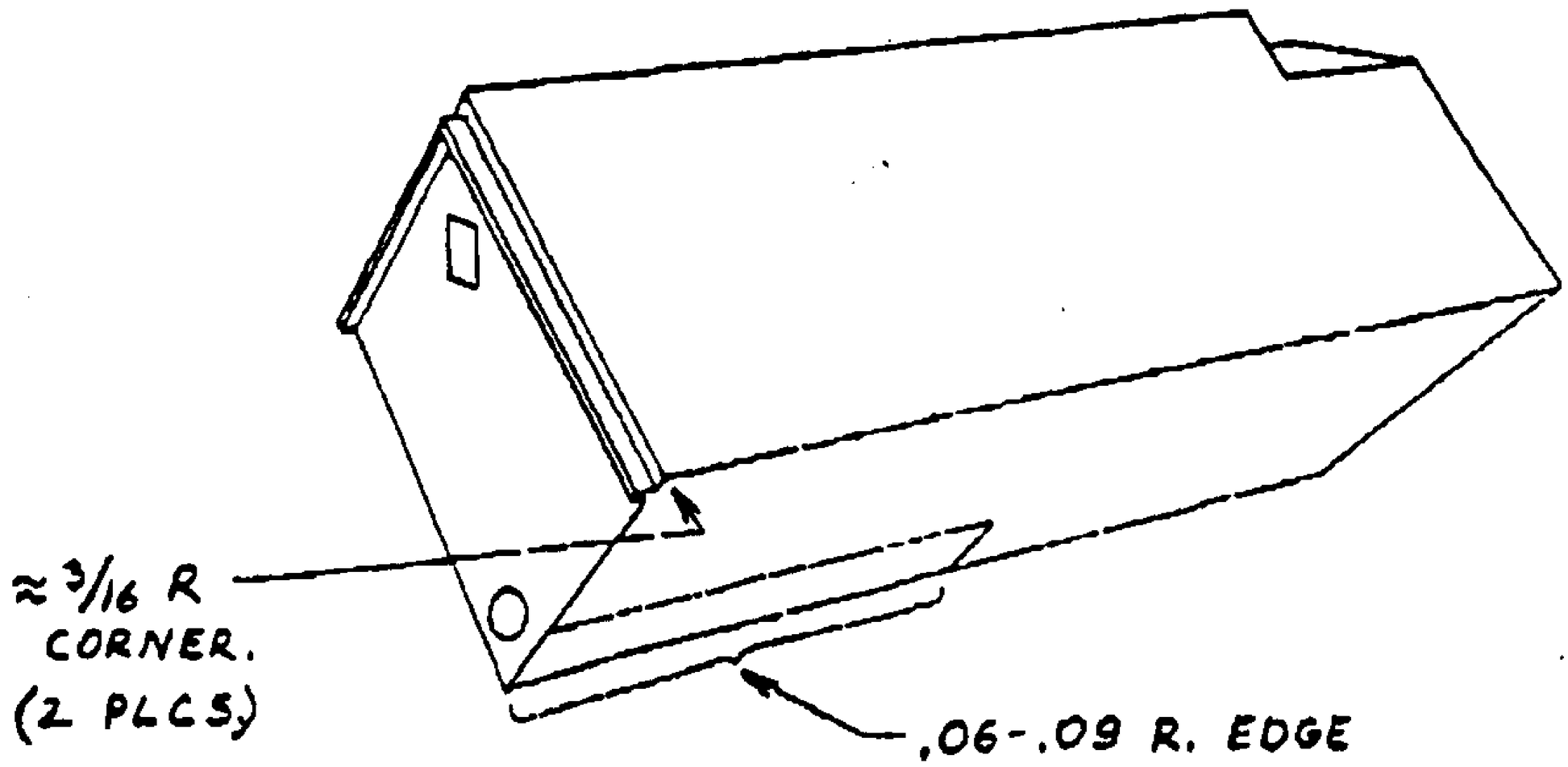
≈ 3/16 R
CORNER.
(2 PLCS)
.06-.09 R. EDGE

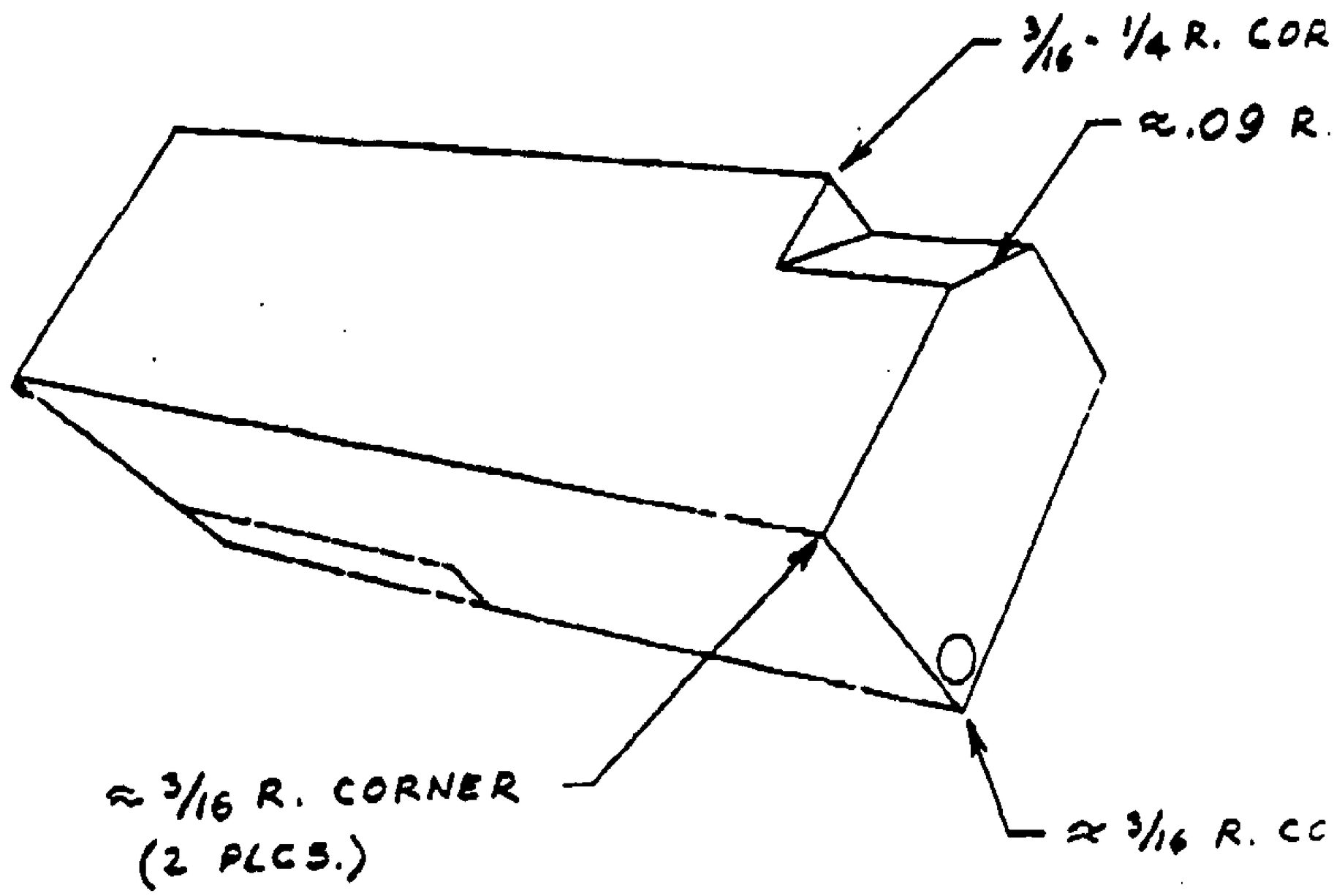
3/16 - 1/4 R. COR
≈.09 R.
≈ 3/16 R. CORNER
(2 PLCS.)
≈ 3/16 R. CC

ST / HSP

Dimensions: From PIPN 2130A2

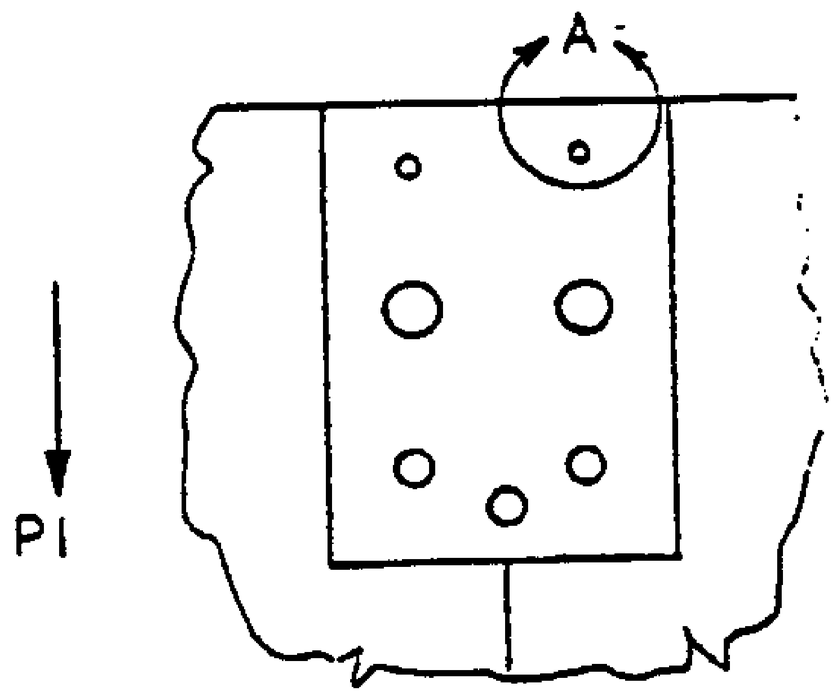

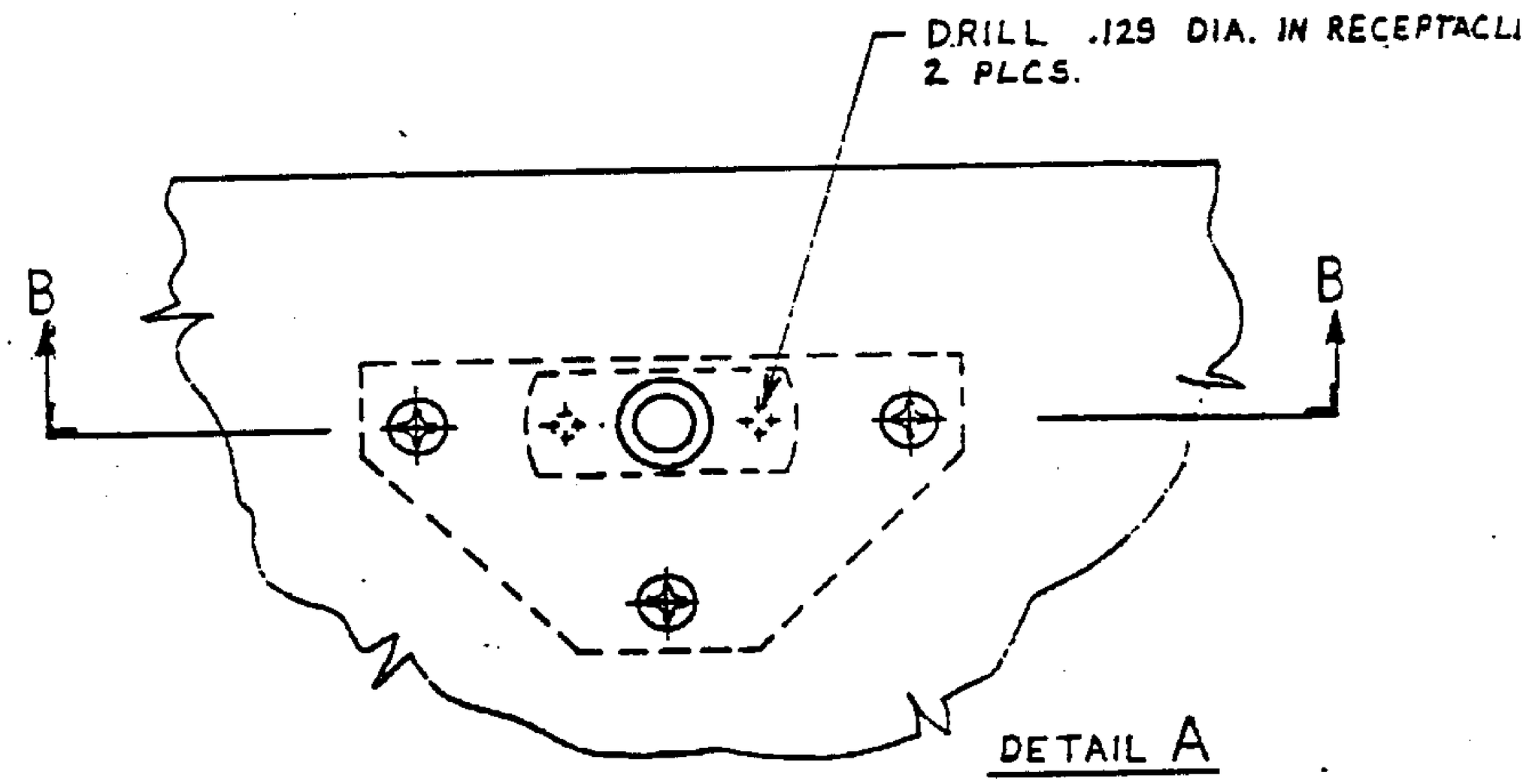

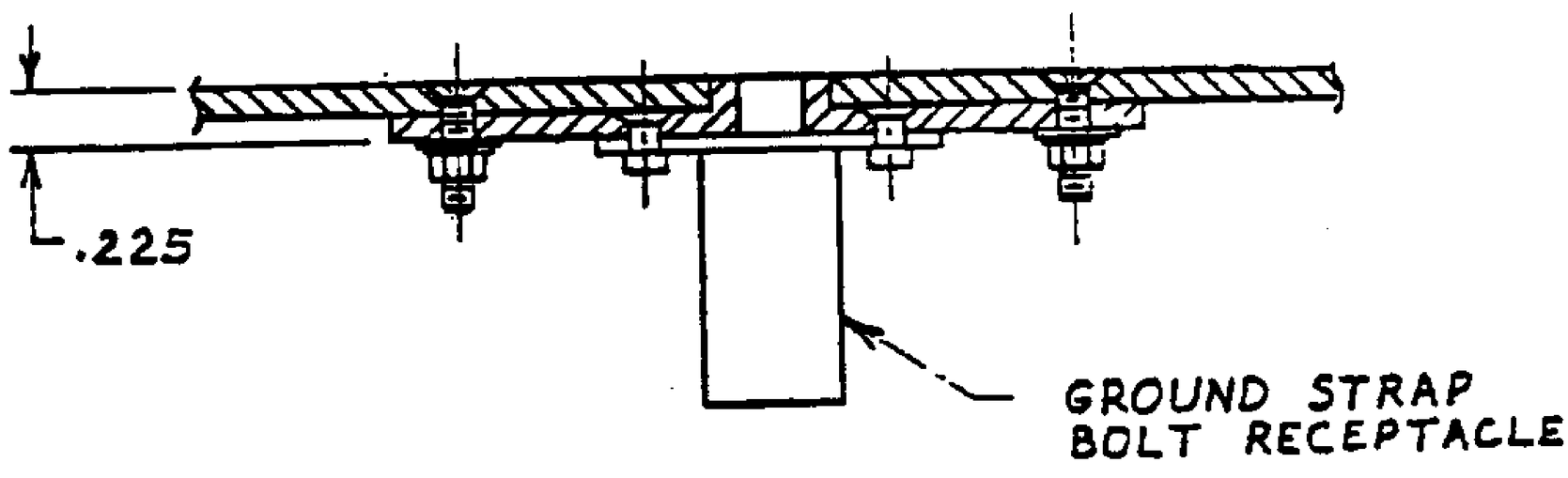

SECTION B-B

5

10.5 STAR Deviations and Waivers 10.5-1 IRN 82

10.5.1 No Number Assigned 10.5-2

10.5.2 No Number Assigned 10.5-4 IRN 83

10.5.3 No Number Assigned 10.5-6 IRN 89

(Supersedes pg. 10.5-1 dated 13 January 1986)

DEVIATION APPROVAL REQUEST

1. FOR: [XX] DEVIATION [ ] SUMMARY OF MINOR NONCONFORMANCES

2. FROM ~~XXXXXXXX~~
Andy Barr - GSFC Instrument Manager

3. CONTRACT NUMBER:

4. REQUEST NUMBER:
CCR 1278

5. NOMENCLATURE:
ST-STAR

6. NUMBER:

7. REVISION:

8. DATE:
7-3-85

9. NONCONFORMANCE:
[XX] MINOR [ ] MAJOR

10. MRB ACTION NO.:

11. SERIAL NUMBER(S):

12. LOT NUMBER:

13. QUANTITY:

14. SUPPLIER OR SUBCONTRACTOR (GIVE NAME AND ADDRESS):
University of Wisconsin - Space Science and Engineering Center
1225 W. Dayton Street, Madison, Wisconsin 53706

15. SPECIFIED REQUIREMENTS:
ST-ICD-02E
para. 3.7.9.8 Radiated Field Emissions

16. DESCRIPTION OF DEPARTURE FROM REQUIREMENTS:
Narrowband radiated emissions exceeded specification limits as listed below.

23 to 30 MH_z 20 dB

50 to 65 MH_z 30 dB

17. REASON FOR REQUEST AND/OR CORRECTIVE ACTION TAKEN:
See attached sheet

18. REMARKS:

19. CONTRACTOR CERTIFICATION: THE CONTRACTOR HEREBY CERTIFIES THAT THE ABOVE DESCRIBED DEVIATION IS A DEPARTURE FROM THE CONTRACTUAL REQUIREMENTS IN THE QUANTITIES AND/OR CONDITIONS AS STATED ABOVE.

[ ] _____ COST ADJUSTMENT (EXPLAIN)
[ ] NO COST ADJUSTMENT

TITLE _____ SIGNATURE OF AUTHORIZED REPRESENTATIVE _____ DATE _____

20. GOVERNMENT QUALITY ASSURANCE REPRESENTATIVE COMMENTS:

Retyped by MSFC for clarity

TITLE _____ SIGNATURE _____ DATE _____

21. MSFC REVIEW:

ORGANIZATION SYMBOL	REPRESENTATIVE	CONCURRENCE	NON-CONCURRENCE	DATE

22. CONTRACTING OFFICER'S REPRESENTATIVE OR OTHER DULY DELEGATED AUTHORITY:
[ ] DISAPPROVAL (RECOMMENDED)
[ ] APPROVAL (RECOMMENDED) (WITH) (WITHOUT) PRICE ADJUSTMENT. $ _____

SIGNATURE _____ DATE _____

23. CONTRACTING OFFICER:
[XX] APPROVED
[ ] DISAPPROVED
[ ] SUBJECT TO CONDITIONS STATED ON MSFC FORM _____-1.

/s/ Elizabeth Auston 10/28/85
SIGNATURE DATE

MSFC - Form 847 (Rev. May 1969)

(New page created by IRN 82)

DEVIATION APPROVAL REQUEST

#17. Reason for request and/or corrective action taken:

These emissions are thought to be due to the inadequate shielding of the RIU telemetry and multiplex cables. The cables are the same ones used in the HST cable harness, therefore improving the shielding within the STAR would not significantly reduce these emissions in the HST. The engineering and retrofitting of fixes and retesting would be very costly since the STAR has completed its environmental test program. The expected results would be negligible due to the leakage of the RIU cables.

(New page created by IRN 82)

DEVIATION APPROVAL REQUEST

1. FOR: [XX] ~~XXXXXXXX~~ Waiver [ ] SUMMARY OF MINOR NONCONFORMANCES

2. FROM ~~XXXXXXXXX~~: Andy Barr - GSFC Instrument Manager

3. CONTRACT NUMBER:

4. REQUEST NUMBER: CCR 1280

5. NOMENCLATURE: ST - STAR

6. NUMBER:

7. REVISION:

8. DATE: 7-3-85

9. NONCONFORMANCE: [XX] MINOR [ ] MAJOR

10. MRB ACTION NO.:

11. SERIAL NUMBER(S):

12. LOT NUMBER:

13. QUANTITY:

14. SUPPLIER OR SUBCONTRACTOR (GIVE NAME AND ADDRESS):
University of Wisconsin - Space Science and Engineering Center
1225 W. Dayton Street, Madison, Wisconsin 53706

15. SPECIFIED REQUIREMENTS:
ST-ICD-02
Para. 3.7.9.3 Generated Ripple and Noise

16. DESCRIPTION OF DEPARTURE FROM REQUIREMENTS:
Conducted emissions on the power lines exceeded specification limits as listed below.

Broadband

325 KHz	5dB	1.8 to 3.2 MHz	18dB
1.5 MHz	5dB	4.1 MHz	5dB
2.0 MHz	15dB	5 to 13 MHz	12dB
2.4 MHz	10dB	18 to 20 MHz	12dB

12.5 MHz 25dB - This signal occurred randomly during the test program and was thought to be generated by the GSE, however, this was not verified.

Narrowband

13 MHz 3dB

17. REASON FOR REQUEST AND/OR CORRECTIVE ACTION TAKEN:

18. REMARKS:

19. CONTRACTOR CERTIFICATION: THE CONTRACTOR HEREBY CERTIFIES THAT THE ABOVE DESCRIBED DEVIATION IS A DEPARTURE FROM THE CONTRACTUAL REQUIREMENTS IN THE QUANTITIES AND/OR CONDITIONS AS STATED ABOVE.

[ ] _____ COST ADJUSTMENT (EXPLAIN)
[ ] NO COST ADJUSTMENT

TITLE _____ SIGNATURE OF AUTHORIZED REPRESENTATIVE _____ DATE _____

20. GOVERNMENT QUALITY ASSURANCE REPRESENTATIVE COMMENTS:

Retyped by MSFC for clarity

TITLE _____ SIGNATURE _____ DATE _____

21. MSFC REVIEW:

ORGANIZATION SYMBOL	REPRESENTATIVE	CONCURRENCE	NON-CONCURRENCE	DATE

22. CONTRACTING OFFICER'S REPRESENTATIVE OR OTHER DULY DELEGATED AUTHORITY:

[ ] DISAPPROVAL (RECOMMENDED)
[ ] APPROVAL (RECOMMENDED)(WITH) (WITHOUT) PRICE ADJUSTMENT. $ _____

SIGNATURE _____ DATE _____

23. CONTRACTING OFFICER:

[XX] APPROVED
[ ] DISAPPROVED
[ ] SUBJECT TO CONDITIONS STATED ON MSFC FORM _____-1.

/s/Elizabeth Austin 10/28/85
SIGNATURE DATE

MSFC - Form 847 (Rev. May 1969)

(New page created by IRN 83)

DEVIATION APPROVAL REQUEST

#17. Reason For Request and/or Corrective Action Taken:

It was demonstrated that telemetry and multiplex signals to the RIUs were cross coupling to the power lines in the cable harness external to the STAR due to inadequate shielding on these cables. Since these cables are the same as those used in the HST, these conducted emissions cannot be significantly reduced by additional filtering in the STAR. This cross coupling problem was previously reported following the EMI retest of the RIU at Fairchild.

DEVIATION APPROVAL REQUEST

1. FOR: [XX] DEVIATION [ ] SUMMARY OF MINOR NONCONFORMANCES

2. FROM CONTRACTOR: Andy Barr - GSFC Instrument Manager

3. CONTRACT NUMBER:

4. REQUEST NUMBER:

5. NOMENCLATURE: ST - STAR

6. NUMBER:

7. REVISION:

8. DATE: 7-3-85

9. NONCONFORMANCE: [XX] MINOR [ ] MAJOR

10. MRB ACTION NO.:

11. SERIAL NUMBER(S):

12. LOT NUMBER:

13. QUANTITY:

14. SUPPLIER OR SUBCONTRACTOR (GIVE NAME AND ADDRESS):
University of Wisconsin - Space Science and Engineering Center
1225 W. Dayton Street, Madison, Wisconsin 53706

15. SPECIFIED REQUIREMENTS:

ST-ICD-02
para. 3.7.9.3 Generated Ripple and Noise

16. DESCRIPTION OF DEPARTURE FROM REQUIREMENTS:

Transient conducted emissions on the STAR power lines generated by the cycling of the heater relays and the thermostats exceeded the broadband specification limits are listed below.

See attached sheet.

17. REASON FOR REQUEST AND/OR CORRECTIVE ACTION TAKEN:

See attached sheet

REMARKS:

Retyped by MSFC for clarity

19. CONTRACTOR CERTIFICATION: THE CONTRACTOR HEREBY CERTIFIES THAT THE ABOVE DESCRIBED DEVIATION IS A DEPARTURE FROM THE CONTRACTUAL REQUIREMENTS IN THE QUANTITIES AND/OR CONDITIONS AS STATED ABOVE.

[ ] _____ COST ADJUSTMENT (EXPLAIN)
[ ] NO COST ADJUSTMENT

TITLE _____ SIGNATURE OF AUTHORIZED REPRESENTATIVE _____ DATE _____

20. GOVERNMENT QUALITY ASSURANCE REPRESENTATIVE COMMENTS:

TITLE _____ SIGNATURE _____ DATE _____

21. MSFC REVIEW:

ORGANIZATION SYMBOL	REPRESENTATIVE	CONCURRENCE	NON-CONCURRENCE	DATE

22. CONTRACTING OFFICER'S REPRESENTATIVE OR OTHER DULY DELEGATED AUTHORITY:

[ ] DISAPPROVAL (RECOMMENDED)
[ ] APPROVAL (RECOMMENDED)(WITH) (WITHOUT) PRICE ADJUSTMENT. $ _____

(New Page created by IRN 89)

SIGNATURE _____ DATE _____

23. CONTRACTING OFFICER:

[X] APPROVED
[ ] DISAPPROVED
[ ] SUBJECT TO CONDITIONS STATED ON MSFC FORM _____-1.

/s/ Elizabeth Austin 10/25/85

SIGNATURE DATE

MSFC - Form 847 (Rev. May 1969)

Deviation Approval Request

#16. Description of Departure from requirements:

37 to 42 KHz	7dB
57 to 64 KHz	10dB
120 to 160 KHz	5dB
370 to 680 KHz	3dB
880 KHz	8dB
0.95 to 1.2 KHz	9dB
1.35 to 1.42 MHz	20dB
1.5 MHz	25dB
1.75 to 2.0 MHz	20dB
3.7 MHz	33dB
2.8 to 5.5 MHz	15dB
6.0 MHz	20dB
5 to 6.5 MHz	10dB
8.2 to 13 MHz	10dB
13 MHz	20dB

#17. Reason for Request and/or corrective action taken:

The switching of the heater relays and thermostats is expected to occur as in frequently as every three orbits. Modifying the existing STAR EMC power line filters will be very expensive due to the EMC and Environmental retesting that would be required. The STAR has already completed its environmental test program.

(New Page created by IRN 89)

10.6 COSTAR Deviations and Waivers

IRN 102

The Corrective Optics Space Telescope Axial Replacement (COSTAR), STE-25, is relieved from the requirements of this ICD to the extent shown on the NASA approved Ball Electro-Optics Cryogenic Division deviation and waiver requests listed below and included on the following pages.

		Page	
10.6.1	COS-W0001 COSTAR Exterior Surface Properties Waiver	10.6-2	
10.6.2	EMI Testing, W0009	10.6-5	IRN 103
10.6.3	Magnetized Track, W0010	10.6-7	
10.6.4	Thermal Power Mode Constraints, W0011	10.6-9	
10.6.5	COSTAR Envelope Violations, W0015	10.6-10	
10.6.6	Infrared Background, W0017	10.6-12	
10.6.7	SI Static Envelope Violation, W0018	10.6-13	
10.6.8	Unused Science Interface, W0019	10.6-15	
10.6.9	Stray Light Waiver, W0021A	10.6-16	IRN 107

(This supersedes page 10.6-1 dated 27 August 1993)

REQUEST FOR DEVIATION / WAIVER (RFD/RFW)

1. DATE (YYMMDD): 930622

Form Approved OMB No. 0704-0188

Public reporting burden for this collection of information is estimated to average 2 hours per response, including the time for reviewing instructions, searching existing data sources, gathering and maintaining the data needed, and completing and reviewing the collection of information. Send comments regarding this burden estimate or any other aspect of this collection of information, including suggestions for reducing this burden, to Department of Defense, Washington Headquarters Services, Directorate for Information Operations and Reports, 1215 Jefferson Davis Highway, Suite 1204, Arlington, VA 22202-4302, and to the Office of Management and Budget, Paperwork Reduction Project (0704-0188), Washington, DC 20503.

PLEASE DO NOT RETURN YOUR COMPLETED FORM TO EITHER OF THESE ADDRESSES. RETURN COMPLETED FORM TO THE GOVERNMENT ISSUING CONTRACTING OFFICER FOR THE CONTRACT/PROCURING ACTIVITY NUMBER LISTED IN ITEM 2 OF THIS FORM.

2. PROCURING ACTIVITY NUMBER:

3. DODAAC:

4. ORIGINATOR
a. TYPED NAME (First, Middle Initial, Last): Matthew Jurotich
b. ADDRESS (Street, City, State, Zip Code): Goddard Space Flight Center, Flight Systems and Servicing Project, Code 442

5. (X one): [ ] DEVIATION [XX] WAIVER

6. (X one): [ ] MINOR [XX] MAJOR [ ] CRITICAL

7. DESIGNATION FOR DEVIATION / WAIVER

a. MODEL/TYPE	b. CAGE CODE	c. SYS. DESIG.	d. DEV/WAIVER NO.
COSTAR	25306	STE-25	COS-W-001

8. BASELINE AFFECTED: [ ] FUNCTIONAL [ ] ALLOCATED [XX] PRODUCT

9. OTHER SYSTEM/CONFIGURATION ITEMS AFFECTED: [ ] YES [XX] NO

10. TITLE OF DEVIATION / WAIVER
COSTAR EXTERIOR SURFACE PROPERTIES WAIVER

11. CONTRACT NO. AND LINE ITEM
NAS5-36000

12. PROCURING CONTRACTING OFFICER
a. NAME (First, Middle Initial, Last)
b. CODE
c. TELEPHONE NO

13. CONFIGURATION ITEM NOMENCLATURE
COSTAR

14. CLASSIFICATION OF DEFECT
a. CD NO.
b. DEFECT NO.
c. DEFECT CLASSIFICATION: [ ] MINOR [ ] MAJOR [ ] CRITICAL

15. NAME OF LOWEST PART / ASSEMBLY AFFECTED

16. PART NO. OR TYPE DESIGNATION

17. EFFECTIVITY

18. RECURRING DEVIATION / WAIVER: [ ] YES [XX] NO

19. EFFECT ON COST / PRICE
None

20. EFFECT ON DELIVERY SCHEDULE
None

21. EFFECT ON INTEGRATED LOGISTICS SUPPORT, INTERFACE OR SOFTWARE
None

22. DESCRIPTION OF DEVIATION / WAIVER
COSTAR violates the local area provisions of Note 2 on Figure 4.6-2 "ORI Exterior Surface Temperature and Properties". The α for COSTAR is less than .8 on the entire AFT Shroud Face of COSTAR. The figure is contained in ST-ICD-02 Rev. E (Axial SI to OTA and SSM Interface Control Document). Reference Pages 4.6-4 and 4.6-8 of ST-ICD-02.

23. NEED FOR DEVIATION / WAIVER
This configuration is necessary in order to allow efficient thermal control of COSTAR and is acceptable to both COSTAR and the HST with respect to thermal control. The requirement to allow efficient thermal surface control in COSTAR while in the axial SIPE is addressed in ST-ICD-84.

24. CORRECTIVE ACTION TAKEN
No hardware correction is required.

25. SUBMITTING ACTIVITY
a. TYPED NAME (First, Middle Initial, Last): Matthew Jurotich
b. TITLE: Deputy Instrument Development Manager
c. SIGNATURE: Matthew M Jurotich 7/30/93

26. APPROVAL / DISAPPROVAL
a. RECOMMEND [ ] APPROVAL [ ] DISAPPROVAL
b. APPROVAL [X] APPROVED [ ] DISAPPROVED
c. GOVERNMENT ACTIVITY: Deputy Associate Director of Flight Projects for HST
d. TYPED NAME (First, Middle Initial, Last): John H. Campbell
e. SIGNATURE: John H Campbell
f. DATE SIGNED (YYMMDD): 7/9/93
g. APPROVAL [X] APPROVED [ ] DISAPPROVED
h. GOVERNMENT ACTIVITY: Contracting Officer
i. TYPED NAME (First, Middle Initial, Last): Gifford Moak
j. SIGNATURE: Gifford D Moak
k. DATE SIGNED (YYMMDD): 8/2/93

DD Form 1694, APR 92

(New Page Created by IRN 102)

4.6.1.1.3 Radiative Heat Transfer

4.6.1.1.3.1 Obscurations and Surface Characteristics. The FPS thermal barrier and FPS obscurations and surface characteristics are shown in Figure 4.6-1.

The ± V3 direction view of the SI enclosure to the SSM wall is obscured by the FPS, and the -V3 direction view is obscured by the equipment shelf containing FHSTs and RSUs, which are included in the effective sink temperatures. However, critical radiating surfaces of the SIs should be placed so as to avoid being obscured by these components. Some features of the obscuring structures can be found in the Aft Shroud Metrology Book.

Figures 4.6-1c, d, e, and f show how the FPS thermal barrier should be represented in the thermal math model.

Waiver [The SIs exterior structure temperature and surface property requirements during HST science mission operations are shown in Figure 4.6-2.]

4.6.1.1.3.2 Effective Sink Temperatures. The radiative heat transfer environment in the SSM aft shroud compartment is defined in terms of "effective sink temperatures". This temperature represents all thermal contributions including the -V3 equipment shelf, as a single parameter. The effective sink temperature (T_{sink}) for a given SI radiator should be used as follows:

- The view factor between the SI external node and the effective sink is 1.0.
- The radiative conductor between the SI node and the (T_{sink}) is the product of the node area and its emittance. The emittance of the effective sink node is 1.0.
- The SI node coupled to an effective sink should not be radiatively coupled to any other external node.

The effective sink temperature ranges for an axial SI in the Operational and Hold modes are defined in Figure 4.6-3. The values shown in Figure 4.6-3 represent the orbital average effective sink temperatures averaged for all the nodes on the particular SI surface.

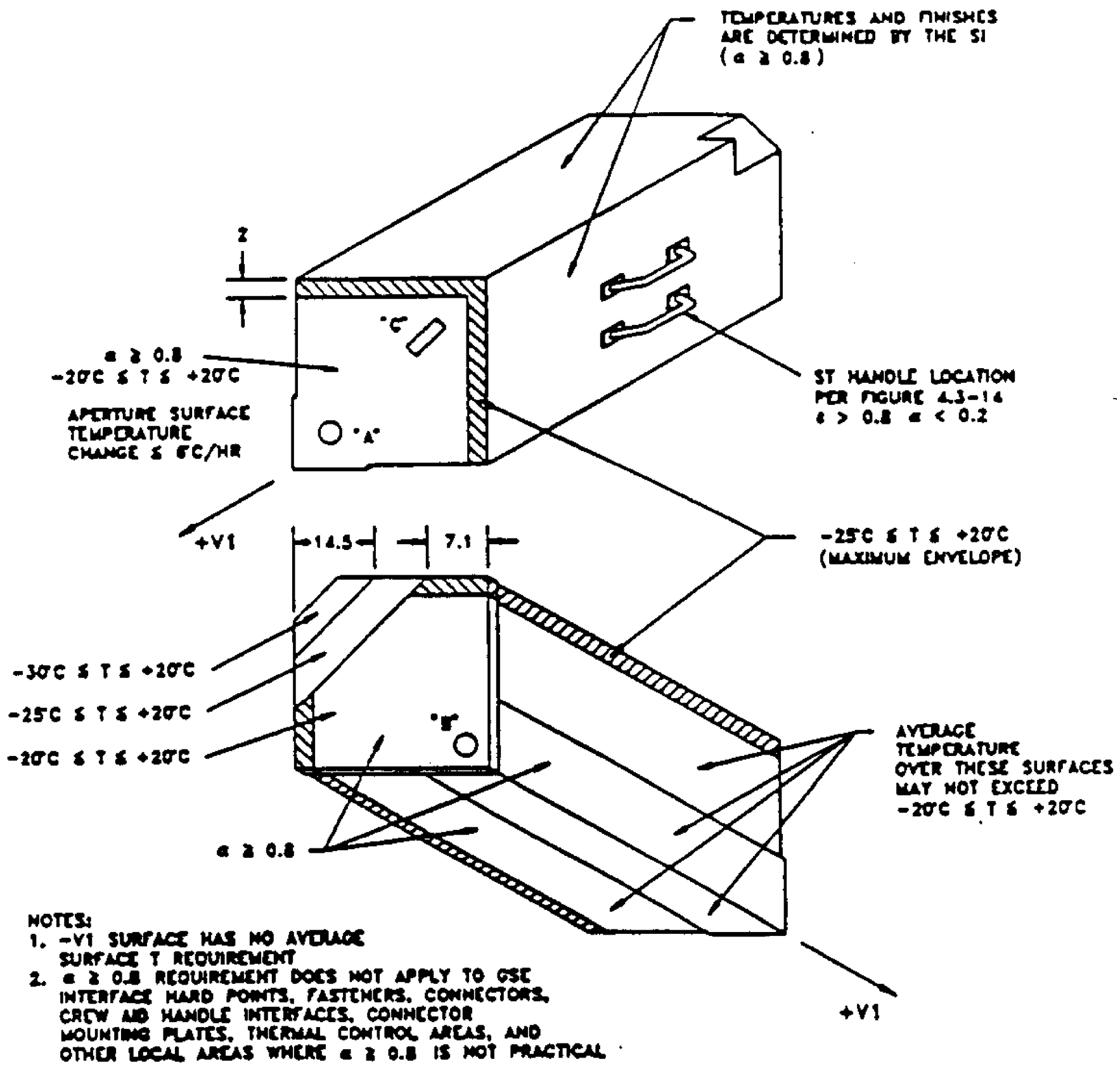

Figure 4.6-2 ORI Exterior Surface Temperature and Properties

REQUEST FOR DEVIATION / WAIVER

(See MIL-STD-480 or for instructions)

DATE (YYMMDD): 93 8-25

Form Approved

ST-ICD-02E
27 FEBRUARY 1985
IRN 103
27 AUGUST 1993

Public reporting burden for this collection of information is estimated to average 2 hours per response, including the time for reviewing instructions, searching existing data sources, gathering and maintaining the data needed, and completing and reviewing the collection of information. Send comments regarding this burden estimate or any other aspect of this collection of information, including suggestions for reducing this burden, to Washington Headquarters Services, Directorate for Information Operations and Reports, 1215 Jefferson Davis Highway, Suite 1204, Arlington, VA 22202-4302, and to the Office of Information and Regulatory Affairs, Office of Management and Budget, Washington, DC 20503.

1. ORIGINATOR NAME AND ADDRESS
Ball Electro-Optics and Cryogenic Division
P.O. Box 1062
Boulder, Colo. 80306-1062

2. [ ] DEVIATION [X] WAIVER

3. [ ] MINOR [X] MAJOR [ ] CRITICAL

4. DESIGNATION FOR DEVIATION / WAIVER

a. MODEL/TYPE	b. CAGE CODE	c. SYS DESIG.	d. DEV/WAIVER NO.
COSTAR	13993	IN0068A	W0009

5. BASELINE AFFECTED [ ] FUNCTIONAL [ ] ALLOCATED [X] PRODUCT

6. OTHER SYSTEM / CONFIGURATION ITEMS AFFECTED [ ] YES [ ] NO

7. SPECIFICATIONS AFFECTED - TEST PLAN

	CAGE CODE	SPECIFICATION / DOCUMENT NO.	REV.
a. SYSTEM	13993	IN0068A	
b. ITEM		ST-ICD-02	E
c. TEST PLAN			

8. DRAWINGS AFFECTED

CAGE CODE	NUMBER	REV.
13993	524000	

9. TITLE OF DEVIATION / WAIVER
EMI Testing

9.a. WEAPON SYSTEM CODE OR DESIGNATION

10. CONTRACT NO. AND LINE ITEM
NAS5-36000

11. PROCURING CONTRACTING OFFICER
Robert Kirk
CODE 284.1 TEL (301)286-4992

12. CONFIGURATION ITEM NOMENCLATURE
COSTAR

13. CLASSIFICATION OF DEFECT

a. CD NO.	b. DEFECT NO.	c. DEFECT CLASSIFICATION
		[X] MINOR [ ] MAJOR [ ] CRITICAL

14. NAME OF LOWEST PART/ASSEMBLY AFFECTED
COSTAR

15. PART NO. OR TYPE DESIGNATION
524000-500

16. LOT NO.
N/A

17. QTY
1

18. RECURRING DEVIATION / WAIVER [ ] YES [X] NO

19. EFFECT ON COST / PRICE
GFE/$1,000,000.00

20. EFFECT ON DELIVERY SCHEDULE
GFE/4 weeks

21. EFFECT ON INTEGRATED LOGISTICS SUPPORT, INTERFACE OR SOFTWARE
NONE

22. DESCRIPTION OF DEVIATION / WAIVER
SEE ATTACHED

23. NEED FOR DEVIATION / WAIVER
The RIU is GFE. Efficiency of the MEB would go unacceptably down to solve the CS06 peak.

24. SERIAL NUMBER(S) AFFECTED
0001

25. SUBMITTING ACTIVITY AUTHORIZED SIGNATURE
Dave Fish

25.a. TITLE
Product Assurance Manager

26. APPROVAL / DISAPPROVAL a. RECOMMEND [X] APPROVAL [ ] DISAPPROVAL

a. APPROVAL	c. GOVERNMENT ACTIVITY	SIGNATURE	DATE (YYMMDD)
[X] APPROVED [ ] DISAPPROVED	PAUL H. GEITHNER COSTAR INSTRUMENT MANAGER	Paul H. Geithner	93-08-12
a. APPROVAL	e. GOVERNMENT ACTIVITY	SIGNATURE	DATE (YYMMDD)
[✓] APPROVED [ ] DISAPPROVED	Robert S. Kirk Contracting Officer		9-7-93

CD Form 1694, JUL 92

(New Page Created by IRN 103)

22. Description of Deviation/Waiver

Section 4.7.9.4, ST-ICD-02E. "SI Generated Ripple & Noise"

Conducted emissions testing on the RIU indicated out of spec narrowband emissions at 40.95 KHz. In broadband measurements the RIU emissions are at the limit at 41 KHz.

Section 4.7.9.5, ST-ICD-02E. "Transient Susceptibility"
COSTAR shows a susceptibility in the CS06 60V pk, 10ms transient pulse test. Further test indicate threshold of susceptibility in 50V pk.

REQUEST FOR DEVIATION / WAIVER (RFD/RFW)

1. DATE (YYMMDD): 93-07-21

Form Approved OMB No. 0704-0188

PLEASE DO NOT RETURN YOUR COMPLETED FORM TO EITHER OF THESE ADDRESSES. RETURN COMPLETED FORM TO THE GOVERNMENT ISSUING CONTRACTING OFFICER FOR THE CONTRACT/PROCURING ACTIVITY NUMBER LISTED IN ITEM 2 OF THIS FORM.

2. PROCURING ACTIVITY NUMBER

3. DODAAC

4. ORIGINATOR

a. TYPED NAME (First, Middle Initial, Last): Ball Electro-Optics and Cryogenics Division

b. ADDRESS (Street, City, State, Zip Code): P.O. Box 1062, Boulder, Colo. 80306-1062

5. (X one): [ ] DEVIATION [X] WAIVER

6. (X one): [ ] MINOR [X] MAJOR [ ] CRITICAL

7. DESIGNATION FOR DEVIATION / WAIVER

a. MODEL/TYPE: COSTAR
b. CAGE CODE: 13993
c. SYS. DESIG.: IN0068A
d. DEV/WAIVER NO.: W0010

8. BASELINE AFFECTED: [ ] FUNCTIONAL [ ] ALLOCATED [X] PRODUCT

9. OTHER SYSTEM/CONFIGURATION ITEMS AFFECTED: [ ] YES [ ] NO

10. TITLE OF DEVIATION / WAIVER: Magnetized Track

11. CONTRACT NO. AND LINE ITEM: NAS5-36000

12. PROCURING CONTRACTING OFFICER
a. NAME (First, Middle Initial, Last): Robert Kirk
b. CODE: 284.1
c. TELEPHONE NO: (301)286-4992

13. CONFIGURATION ITEM NOMENCLATURE: COSTAR

14. CLASSIFICATION OF DEFECT
a. CD NO.:
b. DEFECT NO:
c. DEFECT CLASSIFICATION: [X] MINOR [ ] MAJOR [ ] CRITICAL

15. NAME OF LOWEST PART/ASSEMBLY AFFECTED: Track Assy

16. PART NO. OR TYPE DESIGNATION: 524473-500

17. EFFECTIVITY:

18. RECURRING DEVIATION/WAIVER: [ ] YES [X] NO

19. EFFECT ON COST/PRICE: Remove, degauss, replace, retest

20. EFFECT ON DELIVERY SCHEDULE: Several weeks

21. EFFECT ON INTEGRATED LOGISTICS SUPPORT, INTERFACE OR SOFTWARE: NONE

22. DESCRIPTION OF DEVIATION / WAIVER: See Attached

23. NEED FOR DEVIATION / WAIVER

ST-ICD-02E, Para. 4.6.2.2, states SI Magnetic Field shall not exceed 0.8 gauss. Based on first generation SI Magnetic Fileds, this should not be a problem.

24. CORRECTIVE ACTION TAKEN

Future uses will always demagnetize the tracks

25. SUBMITTING ACTIVITY
a. TYPED NAME (First, Middle Initial, Last): Dave L. Fish
b. TITLE: Product Assurance Mgr
c. SIGNATURE: John Meadows

26. APPROVAL/DISAPPROVAL
a. RECOMMEND [X] APPROVAL [ ] DISAPPROVAL

b. APPROVAL: [X] APPROVED [ ] DISAPPROVED
c. GOVERNMENT ACTIVITY: COSTAR Instrument Manager
d. TYPED NAME (First, Middle Initial, Last): Paul H. Geithner
e. SIGNATURE: Paul H. Geithner
f. DATE SIGNED (YYMMDD): 93-08-12

g. APPROVAL: [X] APPROVED [ ] DISAPPROVED
h. GOVERNMENT ACTIVITY: Contracting Officer
i. TYPED NAME (First, Middle Initial, Last): Robert S. Kirk
j. SIGNATURE:
k. DATE SIGNED (YYMMDD): 9/13/93

DD Form 1694, APR 92

(New Page Created by IRN 103)

COSTAR MAGNETIC MEASUREMENTS

The "rail", 450 stainless steel, is magnetized along its length. At the skin, it produces four "hot" spots, where the field perpendicular to the skin has a peak value.

Spot 1	Side B "No Handle"	7" from "oil pan" corner 40" from A-fitting end.
Spot 2	Side B	6" from "oil pan" corner 30" from A-fitting end.
Spot 3	Side A	8" from "oil-pan" corner 49" from A-fitting end
Spot 4	Side A	8" from "oil pan" corner 32" from A-fitting end.

Field perpendicular to skin

Spot	Field at skin	Dist. out for 1-gs field
1	4.2 gauss outward	6 cm
2	4.0 gs inward	9 cm
3	11 gs outward	16 cm
4	6 gs inward	12 cm

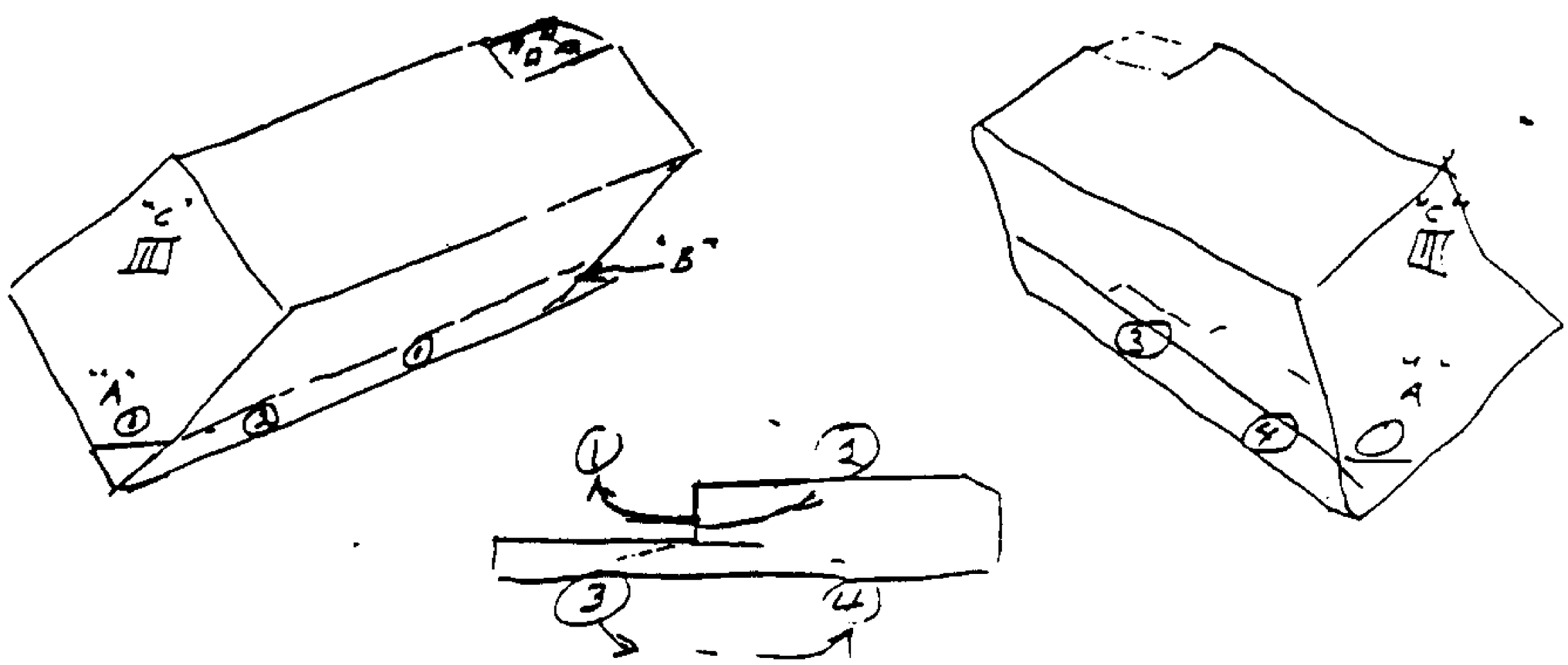

REQUEST FOR DEVIATION / WAIVER (RFD/RFW)

1. DATE (YYMMDD): 93-08-27

2. PROCUREMENT ACTIVITY NUMBER

PLEASE DO NOT RETURN YOUR COMPLETED FORM TO EITHER OF THESE ADDRESSES. RETURN COMPLETED FORM TO THE GOVERNMENT ISSUING CONTRACTING OFFICER FOR THE CONTRACT/PROCUREMENT ACTIVITY NUMBER LISTED IN ITEM 2 OF THIS FORM.

3. DODAAC

4. ORIGINATOR

a. TYPED NAME (First, Middle Initial, Last): Ball Electro-Optics and Cryogenics Division

b. ADDRESS (Street, City, State, Zip Code): P.O. Box 1062, Boulder, Colo. 80306-1062

5. (X one): [ ] Deviation [X] Waiver

6. (X one): [X] Major [ ] Minor

7. DESIGNATION FOR DEVIATION / WAIVER

a. MODEL/TYPE: COSTAR
b. CAGE CODE: 13993
c. SYS. DESIG.: IN0068A
d. DEV/WAIVER NO.: W0011

8. BASELINE AFFECTED: [ ] Funct. Thermal [ ] Allocated [X] Product

9. OTHER SYSTEM/CONFIGURATION ITEMS AFFECTED: [ ] YES [ ] NO

10. TITLE OF DEVIATION / WAIVER
Thermal Power Mode Constaints

11. CONTRACT NO. AND LINE ITEM
NAS5-36000

12. PROCURING CONTRACTING OFFICER
a. NAME (First, Middle Initial, Last): Robert Kirk
b. CODE: 284.1
c. TELEPHONE NO: (301)286-4992

13. CONFIGURATION ITEM NOMENCLATURE
COSTAR

14. CLASSIFICATION OF DEFECT
a. CD NO.:
b. DEFECT NO:
c. DEFECT CLASSIFICATION: [X] Major [ ] Minor [ ] Critical

15. NAME OF LOWEST PART / ASSEMBLY AFFECTED
COSTAR

16. PART NO. OR TYPE DESIGNATION

17. EFFECTIVITY
none

18. RECURRING DEVIATION / WAIVER: [ ] YES [X] NO

19. EFFECT ON COST / PRICE
none

20. EFFECT ON DELIVERY SCHEDULE
none

21. EFFECT ON INTEGRATED LOGISTICS SUPPORT, INTERFACE OR SOFTWARE
none

22. DESCRIPTION OF DEVIATION / WAIVER
COSTAR exceeds hold power constraints described in ICD-02E para. 4.6.1.1.4.2.

23. NEED FOR DEVIATION / WAIVER
COSTAR hold mode power is 62.6 Watts; limit is 58 Watts. Adequate power is available in budget. COSTAR's normal operate mode is hold mode.

24. CORRECTIVE ACTION TAKEN
COSTAR power requirements minimized by design. COSTAR thermal model updated and correlated.

25. SUBMITTING ACTIVITY
a. TYPED NAME (First, Middle Initial, Last): John Meadows
b. TITLE: Sr. Quality Engineer
c. SIGNATURE: John Meadows

26. APPROVAL/DISAPPROVAL: [ ] RECOMMENDING [ ] APPROVAL [ ] DISAPPROVAL

a. APPROVAL: [XX] Approved [ ] Disapproved
b. GOVERNMENT ACTIVITY: COSTAR Instrument Manager
c. TYPED NAME (First, Middle Initial, Last): Paul H. Geithner
d. SIGNATURE: Paul H. Geithner
e. DATE SIGNED (YYMMDD): 93-08-27

f. APPROVAL: [X] Approved [ ] Disapproved
g. GOVERNMENT ACTIVITY: Contracting Officer
h. TYPED NAME (First, Middle Initial, Last): Robert S. Kirk
i. SIGNATURE:
j. DATE SIGNED (YYMMDD): 9/3/93

DD Form 1694, APR 92

REQUEST FOR DEVIATION / WAIVER (RFD/RFW)

1. DATE (YYMMDD): 93-08-11

2. PROCURING ACTIVITY NUMBER:

3. DODAAC:

PLEASE DO NOT RETURN YOUR COMPLETED FORM TO EITHER OF THESE ADDRESSES. RETURN COMPLETED FORM TO THE GOVERNMENT ISSUING CONTRACTING OFFICER FOR THE CONTRACT/PROCURING ACTIVITY NUMBER LISTED IN ITEM 2 OF THIS FORM.

4. ORIGINATOR

a. TYPED NAME (First, Middle Initial, Last): Ball Electro-Optics and Cryogenics Division

b. ADDRESS (Street, City, State, Zip Code): P.O. Box 1062, Boulder, Colo. 80306-1062

5. (X one): [ ] Deviation [Y] Waiver

6. (X one): [X] Major [ ] Minor [ ] Critical

7. DESIGNATION FOR DEVIATION / WAIVER

a. MODEL/TYPE: COSTAR
b. CAGE CODE: 13993
c. SYS. DESIG.: IN0068A
d. DEV/WAIVER NO.: W0015

8. BASELINE AFFECTED: [ ] Functional [ ] Allocated [X] Product

9. OTHER SYSTEM-CONFIGURATION ITEMS AFFECTED: [ ] YES [ ] NO

10. TITLE OF DEVIATION / WAIVER: COSTAR Envelope Violations

11. CONTRACT NO. AND LINE ITEM: NAS5-36000

12. PROCURING CONTRACTING OFFICER
a. NAME (First, Middle Initial, Last): Robert Kirk
b. CODE: 284.1
c. TELEPHONE NO: (301)286-4992

13. CONFIGURATION ITEM NOMENCLATURE: COSTAR

14. CLASSIFICATION OF DEFECT
a. CD NO.:
b. DEFECT NO:
c. DEFECT CLASSIFICATION: [X] Major [ ] Minor [ ] Critical

15. NAME OF LOWEST PART / ASSEMBLY AFFECTED: COSTAR Instrument

16. PART NO. OR TYPE DESIGNATION: 524000-500

17. EFFECTIVITY: 001

18. RECURRING DEVIATION / WAIVER: [ ] YES [X] NO

19. EFFECT ON COST / PRICE: None

20. EFFECT ON DELIVERY SCHEDULE: None if approved; launch slip if disapproved

21. EFFECT ON INTEGRATED LOGISTICS SUPPORT, INTERFACE OR SOFTWARE: None

22. DESCRIPTION OF DEVIATION / WAIVER

The COSTAR exceeds the maximum envelope allowed by ICD-02E section 4 (see attachment). Measured exceedances are acceptable based on HST metrology data and HFMS fit checks.

23. NEED FOR DEVIATION / WAIVER

Rework to eliminate violations are unnecessary and would seriously jeopardize the cleanliness, and hence the performance, of the COSTAR.

24. CORRECTIVE ACTION TAKEN

Issue has been noted regarding future HST axial instruments.

25. SUBMITTING ACTIVITY
a. TYPED NAME (First, Middle Initial, Last): John F. Meadows
b. TITLE: Sr. Quality Engineer
c. SIGNATURE: John F. Meadows

26. APPROVAL / DISAPPROVAL: a. RECOMMEND [X] APPROVAL [ ] DISAPPROVAL

b. APPROVAL: [X] APPROVED [ ] DISAPPROVED
c. GOVERNMENT ACTIVITY: COSTAR Instrument Manager
d. TYPED NAME (First, Middle Initial, Last): Paul H. Geithner
e. SIGNATURE: Paul H. Geithner
f. DATE SIGNED (YYMMDD): 93-08-12

g. APPROVAL: [X] APPROVED [ ] DISAPPROVED
h. GOVERNMENT ACTIVITY: Contracting Officer
i. TYPED NAME (First, Middle Initial, Last): Robert S. Kirk
j. SIGNATURE:
k. DATE SIGNED (YYMMDD): 9/3/93

DD Form 1694, APR 92

Table 1.0 Summary of ICD-02 Exceedances

ICD-02 Specification , inches	Exceed Specification inches	Comments
1.) 5.70 max.	0.068	Inboard P2/P3 surface, ref. ICD-02 fig. 4.3-1.
2) 5.50 max.	0.025	Outboard P2/P3 surface, ref. ICD-02 fig. 4.3-1
3) 34.80 max.	0.072	Inboard P2/P3 surfaces to opposite surfaces, ref. ICD-02 fig. 4.3-1
4) 34.60 max.	0.029	Outboard P2/P3 surfaces to opposite surfaces, ref. ICD-02, ref. fig. 4.3-1
5) 2.15 max.	0.027	Guide Block to Guide Strip, ref. ICD-02 fig. 4.3-1
6) 86.765 (+/- .005)	0.027	Guide Block to Guide Strip, ref. ICD-02 fig. 4.3-13

REQUEST FOR DEVIATION / WAIVER (RFD/RFW)

1. DATE (YYMMDD): 93-08-27

ST-ICD-02E
27 FEBRUARY 1985
IRN 103
27 AUGUST 1993

PLEASE DO NOT RETURN YOUR COMPLETED FORM TO EITHER OF THESE ADDRESSES. RETURN COMPLETED FORM TO THE GOVERNMENT ISSUING CONTRACTING OFFICER FOR THE CONTRACT/PROCURING ACTIVITY NUMBER LISTED IN ITEM 2 OF THIS FORM.

2. CONTRACT

3. ORIGINATOR

a. TYPED NAME (First, Middle Initial, Last): Ball Electro-Optics and Cryogenics Division

b. ADDRESS (Street, City, State, Zip Code): P.O. Box 1062, Boulder, Colo. 80306-1062

5. (X one): [ ] DEVIATION [X] WAIVER

6. (X one): [X] MANDATORY [ ] CONTROL

7. DESIGNATION FOR DEVIATION / WAIVER

a. MODEL/TYPE: COSTAR
b. CAGE CODE: 13993
c. SYS. DESIG.: IN0068A
d. DEV/WAIVER NO.: W0017

8. BASELINE AFFECTED: [ ] FUNCTIONAL [ ] ALLOCATED [X] PRODUCT

9. OTHER SYSTEM-CONFIGURATION ITEMS AFFECTED: [ ] YES [ ] NO

10. TITLE OF DEVIATION / WAIVER
Infrared Background

11. CONTRACT NO. AND LINE ITEM
NAS5-36000

12. PROCURING CONTRACTING OFFICER
a. NAME (First, Middle Initial, Last): Robert Kirk
b. CODE: 284.1
c. TELEPHONE NO: (301)286-4992

13. CONFIGURATION ITEM NOMENCLATURE
COSTAR

14. CLASSIFICATION OF DEFECT
a. CD NO.
b. DEFECT NO
c. DEFECT CLASSIFICATION: [X] MINOR [ ] MAJOR [ ] CRITICAL

15. NAME OF LOWEST PART / ASSEMBLY AFFECTED
COSTAR

16. PART NO. OR TYPE DESIGNATION
524000-500

17. EFFECTIVITY
none

18. RECURRING DEVIATION / WAIVER: [ ] YES [X] NO

19. EFFECT ON COST / PRICE
none

20. EFFECT ON DELIVERY SCHEDULE
none

21. EFFECT ON INTEGRATED LOGISTICS SUPPORT, INTERFACE OR SOFTWARE
none

22. DESCRIPTION OF DEVIATION / WAIVER
Verification by analysis that COSTAR does not increase the near-infrared background as described in COSTAR Spec STE-25 para. 3.2.1.18 and ICD-02E para. 4.4.5 has not been completed.

23. NEED FOR DEVIATION / WAIVER
Analysis not funded by conscious decision by HST project. COSTAR should not exceed near-infrared background requirements by design. Analysis to be performed by future HST science instrument programs.

24. CORRECTIVE ACTION TAKEN
COSTAR performance assured by design. Analysis to be performed.

25. SUBMITTING ACTIVITY
a. TYPED NAME (First, Middle Initial, Last): John Meadows
b. TITLE: Sr. Quality Engineer
c. SIGNATURE: John Meadows

26. APPROVAL / DISAPPROVAL
a. RECOMMEND [ ] APPROVAL [ ] DISAPPROVAL

b. APPROVAL: [X] APPROVE [ ] DISAPPROVE
c. GOVERNMENT ACTIVITY: COSTAR Instrument Manager
d. TYPED NAME (First, Middle Initial, Last): Paul H. Geithner
e. SIGNATURE: Paul H. Geithner
f. DATE SIGNED (YYMMDD): 93-08-27

g. APPROVAL: [✓] APPROVE [ ] DISAPPROVE
h. GOVERNMENT ACTIVITY: Contracting Officer
i. TYPED NAME (First, Middle Initial, Last): Robert S. Kirk
j. SIGNATURE:
k. DATE SIGNED (YYMMDD): 9/3/93

DD Form 1694, APR 92

(New Page Created by IRN 103)

REQUEST FOR DEVIATION / WAIVER (RFD/RFW)

1. DATE (YYMMDD): 93-08-27

PLEASE DO NOT RETURN YOUR COMPLETED FORM TO EITHER OF THESE ADDRESSES. RETURN COMPLETED FORM TO THE GOVERNMENT ISSUING CONTRACTING OFFICER FOR THE CONTRACT/PROCURING ACTIVITY NUMBER LISTED IN ITEM 2 OF THIS FORM.

2. CODE/AAC

4. ORIGINATOR

a. TYPED NAME (First, Middle Initial, Last): Ball Electro-Optics and Cryogenics Division

b. ADDRESS (Street, City, State, Zip Code): P.O. Box 1062, Boulder, Colo. 80306-1062

5. (X one): [ ] DEVIATION [X] WAIVER

6. (X one): [X] MAJOR [ ] MINOR

7. DESIGNATION FOR DEVIATION / WAIVER

a. MODEL/TYPE: COSTAR | b. CAGE CODE: 13993 | c. SYS. DESIG.: IN0068A | d. DEV/WAIVER NO.: W0018

8. BASELINE AFFECTED: [ ] FUNCTIONAL [ ] ALLOCATED [X] PRODUCT

9. OTHER SYSTEM/CONFIGURATION ITEMS AFFECTED: [ ] YES [ ] NO

10. TITLE OF DEVIATION / WAIVER
SI Static Envelope Violation

11. CONTRACT NO. AND LINE ITEM
NAS5-36000

12. PROCURING CONTRACTING OFFICER
a. NAME (First, Middle Initial, Last): Robert Kirk
b. CODE: 284 | c. TELEPHONE NO: (301)286-4992

13. CONFIGURATION ITEM NOMENCLATURE
COSTAR

14. CLASSIFICATION OF DEFECT
a. CD NO.:
b. DEFECT NO:
c. DEFECT CLASSIFICATION: [ ] MINOR [ ] MAJOR [X] CRITICAL

15. NAME OF LOWEST PART / ASSEMBLY AFFECTED
COSTAR

16. PART NO. OR TYPE DESIGNATION
524000-500

17. EFFECTIVITY
none

18. REQUIRING DEVIATION / WAIVER: [ ] YES [X] NO

19. EFFECT ON COST / PRICE
none

20. EFFECT ON DELIVERY SCHEDULE
none

21. EFFECT ON INTEGRATED LOGISTICS SUPPORT, INTERFACE OR SOFTWARE
none

22. DESCRIPTION OF DEVIATION / WAIVER
COSTAR violates static envelope for axial SIs described in ICD-02E para. 4.3.1. The Deployable Optical Bench (DOB) extends into the HST optical hub approx. 20 inches (see attached sketch). COSTAR envelope defined in drawings.

23. NEED FOR DEVIATION / WAIVER
The COSTAR is unique. Its operation on-orbit requires violation of the axial SI static envelope. COSTAR does not violate the dynamic envelope requirements needed for COSTAR installation into and removal from the HST and ASIPE, or HST return to earth.

24. CORRECTIVE ACTION TAKEN
COSTAR design precludes any adverse science mission impact.

25. SUBMITTING ACTIVITY

a. TYPED NAME (First, Middle Initial, Last): John Meadows
b. TITLE: Sr. Quality Engineer
c. SIGNATURE: John Meadows

26. APPROVAL / DISAPPROVAL: [ ] RECOMMENDED [ ] APPROVAL [ ] DISAPPROVAL

a. APPROVAL: [X] APPROVE [ ] DISAPPROVE
b. GOVERNMENT ACTIVITY: COSTAR Instrument Manager

c. TYPED NAME (First, Middle Initial, Last): Paul H. Geithner
d. SIGNATURE: Paul H. Geithner
e. DATE SIGNED (YYMMDD): 93-08-27

f. APPROVAL: [X] APPROVE [ ] DISAPPROVE
g. GOVERNMENT ACTIVITY: Contracting Officer

h. TYPED NAME (First, Middle Initial, Last): Robert S. Kirk
i. SIGNATURE:
j. DATE SIGNED (YYMMDD): 9/3/93

DD Form 1694, APR 92

(New Page Created by IRN 103)

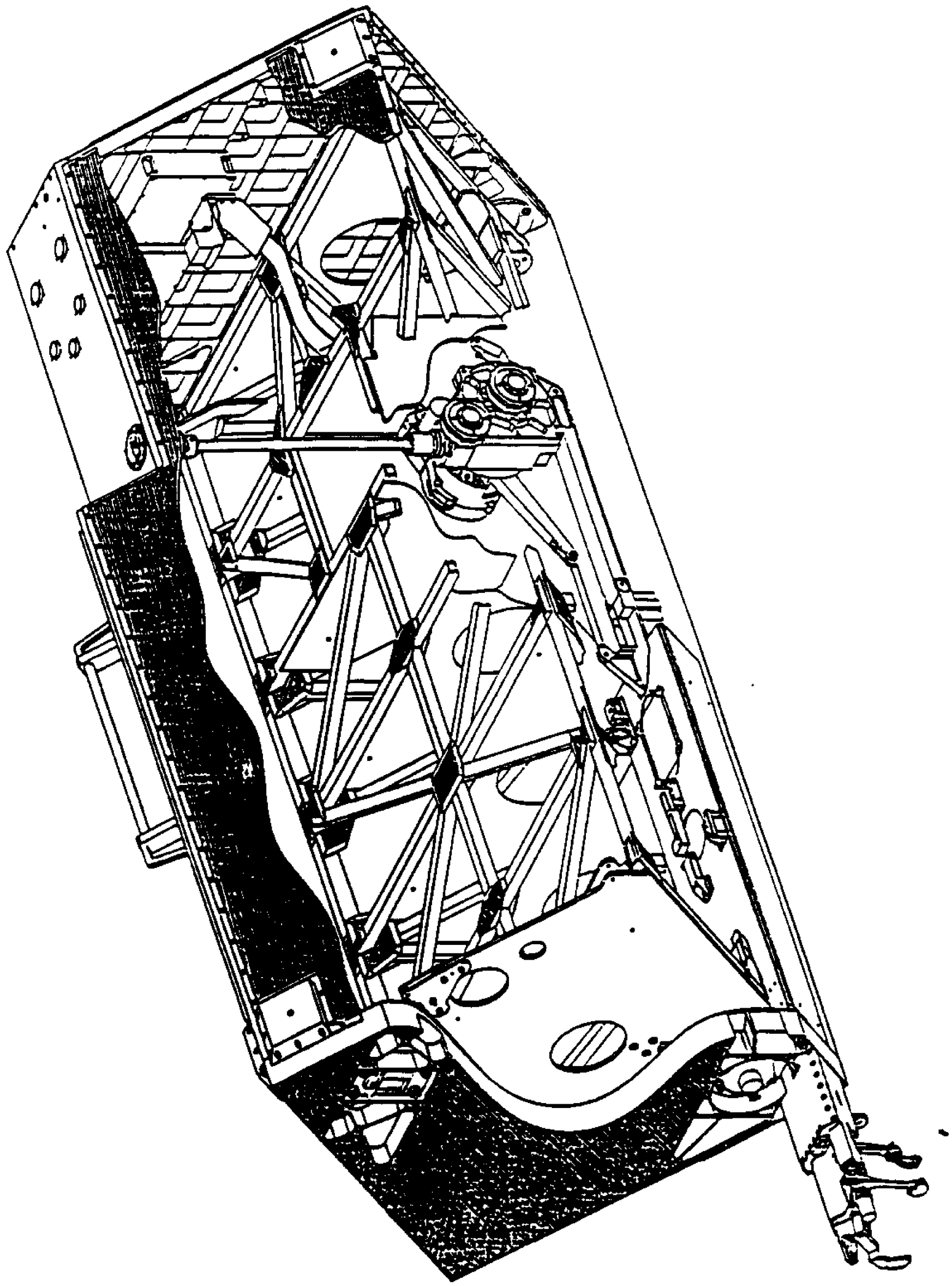

COSTAR Assembly cutaway view

REQUEST FOR DEVIATION / WAIVER (RFD/RFW)

1. DATE (YYMMDD): 93-08-27

PLEASE DO NOT RETURN YOUR COMPLETED FORM TO EITHER OF THESE ADDRESSES. RETURN COMPLETED FORM TO THE GOVERNMENT ISSUING CONTRACTING OFFICER FOR THE CONTRACT/PROCUREMENT ACTIVITY NUMBER LISTED IN ITEM 2 OF THIS FORM.

2. CODE/AAC

3. ORIGINATOR

a. TYPED NAME (First, Middle Initial, Last): Ball Electro-Optics and Cryogenics Division

b. ADDRESS (Street, City, State, Zip Code): P.O. Box 1062, Boulder, Colo. 80306-1062

5. (X one): [ ] DEVIATION [X] WAIVER

6. (X one): [X] MAJOR [ ] CRITICAL

7. DESIGNATION FOR DEVIATION / WAIVER

a. MODEL/TYPE: COSTAR | b. CAGE CODE: 13993 | c. SYS. DESIG.: IN0068A | d. DEV/WAIVER NO.: W0019

8. BASELINE AFFECTED: [ ] FUNCTIONAL [ ] ALLOCATED [X] PRODUCT

9. OTHER SYSTEM/CONFIGURATION ITEMS AFFECTED: [ ] YES [ ] NO

10. TITLE OF DEVIATION / WAIVER
Unused Science Interface

11. CONTRACT NO. AND LINE ITEM
NAS5-36000

12. PROCURING CONTRACTING OFFICER
a. NAME (First, Middle Initial, Last): Robert Kirk
b. CODE: 284.1 | c. TELEPHONE NO: (301)286-4992

13. CONFIGURATION ITEM NOMENCLATURE
COSTAR

14. CLASSIFICATION OF DEFECT
a. CD NO. | b. DEFECT NO. | c. DEFECT CLASSIFICATION: [X] MINOR [ ] MAJOR [ ] CRITICAL

15. NAME OF LOWEST PART / ASSEMBLY AFFECTED
COSTAR

16. PART NO. OR TYPE DESIGNATION
524000-500

17. EFFECTIVITY
none

18. RECURRING DEVIATION / WAIVER: [ ] YES [X] NO

19. EFFECT ON COST / PRICE
none

20. EFFECT ON DELIVERY SCHEDULE
none

21. EFFECT ON INTEGRATED LOGISTICS SUPPORT, INTERFACE OR SOFTWARE
none

22. DESCRIPTION OF DEVIATION / WAIVER
COSTAR has no science data interface, thus it does not conform to ICD-02E requirements described in para. 4.11.2 for pin assignments and connectors.

23. NEED FOR DEVIATION / WAIVER
COSTAR's lack of science data interface should be documented.

24. CORRECTIVE ACTION TAKEN
none required

25. SUBMITTING ACTIVITY
a. TYPED NAME (First, Middle Initial, Last): John Meadows
b. TITLE: Sr. Quality Engineer
c. SIGNATURE: John Meadows

26. APPROVAL/DISAPPROVAL: a. RECOMMENDING [ ] APPROVAL [ ] DISAPPROVAL

b. APPROVAL: [X] APPROVE [ ] DISAPPROVE
c. GOVERNMENT ACTIVITY: COSTAR Instrument Manager
d. TYPED NAME (First, Middle Initial, Last): Paul H. Geithner
e. SIGNATURE: Paul H. Geithner
f. DATE SIGNED (YYMMDD): 93-08-27

g. APPROVAL: [X] APPROVE [ ] DISAPPROVE
h. GOVERNMENT ACTIVITY: Contracting Officer
i. TYPED NAME (First, Middle Initial, Last): Robert S. Kirk
j. SIGNATURE:
k. DATE SIGNED (YYMMDD): 9/3/93

DD Form 1694, APR 92

(New Page Created by IRN 103)

REQUEST FOR DEVIATION / WAIVER (RFD/RFW)

1. DATE (YYMMDD): 93-10-29

Form Approved OMB No. 0704-0188

PLEASE DO NOT RETURN YOUR COMPLETED FORM TO EITHER OF THESE ADDRESSES. RETURN COMPLETED FORM TO THE GOVERNMENT ISSUING CONTRACTING OFFICER FOR THE CONTRACT/PROCURING ACTIVITY NUMBER LISTED IN ITEM 2 OF THIS FORM.

2. PROCURING ACTIVITY NUMBER:

3. DODAAC:

4. ORIGINATOR

a. TYPED NAME (First, Middle Initial, Last): Ball Electro-Optics and Cryogenics Division

b. ADDRESS (Street, City, State, Zip Code): P.O. Box 1062, Boulder, Colo. 80306-1062

5. (X ONE): [ ] DEVIATION [X] WAIVER

6. (X ONE): [X] MAJOR [ ] MINOR

7. DESIGNATION FOR DEVIATION / WAIVER

a. MODEL/TYPE: COSTAR | b. CAGE CODE: 13993 | c. SYS. DESIG.: IN0068A | d. DEV/WAIVER NO.: W-0021 A

8. BASELINE AFFECTED: [ ] FUNCT. PHYS. [ ] PROD. CFGN. [X] PROGRAM

9. OTHER SYSTEM/CEI/SELECTION ITEMS AFFECTED: [ ] YES [X] NO

10. TITLE OF DEVIATION / WAIVER: Stray Light

11. CONTRACT NO. AND LINE ITEM: NAS5-36000

12. PROCURING CONTRACTING OFFICE
a. NAME (First, Middle Initial, Last): Gifford Moak
b. CODE: 284.1 | c. TELEPHONE NO: 301/286-1336

13. CONFIGURATION ITEM NOMENCLATURE: COSTAR

14. CLASSIFICATION OF DEFECT
a. CD NO. | b. DEFECT NO | c. DEFECT CLASSIFICATION: [X] MINOR [ ] MAJOR [ ] CRITICAL

15. NAME OF LOWEST PART/ASSEMBLY AFFECTED: COSTAR

16. PART NO. OR TYPE DESIGNATION: 524000-500

17. EFFECTIVITY: S/N 001

18. REQUIRING DEVIATION / WAIVER: [ ] YES [X] NO

19. EFFECT ON COST/PRICE: None

20. EFFECT ON DELIVERY SCHEDULE: None

21. EFFECT ON INTEGRATED LOGISTICS SUPPORT, INTERFACE OR SOFTWARE: None

22. DESCRIPTION OF DEVIATION / WAIVER: See Attachment

23. NEED FOR DEVIATION / WAIVER: See Attachment

24. CORRECTIVE ACTION TAKEN: See Attachment

25. SUBMITTING ACTIVITY
a. TYPED NAME (First, Middle Initial, Last): Dave L. Fish
b. TITLE: Product Assurance Manager
c. SIGNATURE: Dave Fish

26. APPROVAL / DISAPPROVAL
a. RECOMMENDING | APPROVAL | DISAPPROVAL

a. APPROVAL: [X] APPROVED [ ] DISAPPROVED
b. GOVERNMENT ACTIVITY: COSTAR Instrument Manager
c. TYPED NAME (First, Middle Initial, Last): Paul H. Geithner
d. SIGNATURE: Paul H. Geithner
e. DATE SIGNED (YYMMDD): 94/01/31

f. APPROVAL: [X] APPROVED [ ] DISAPPROVED
g. GOVERNMENT ACTIVITY: HST PROCUREMENT OFFICE CONTRACTING OFFICER, GODDARD SPACE FLIGHT CENTER
h. TYPED NAME (First, Middle Initial, Last): GIFFORD P. MOAK
i. SIGNATURE: Gifford P. Moak
j. DATE SIGNED (YYMMDD): 94/01/31

DD Form 1694, APR 92

(NEW PAGE CREATED BY IRN 107)

22. Description of Deviation/Waiver

Reference STE-25 COSTAR CEI specification 3.2.1.17 (Stray Light) and ST-ICD-02 Paragraph 4.4.4 (Stray Light).

There shall be no direct light path from the OTA exit pupil to the ASI's entrance apertures and slits other than through the COSTAR corrector optics.

This paragraph of the specification was verified during optical performance testing (reference COSTAR-TST-098). No waiver is required for this paragraph.

The additional scattered light surface brightness at the focal plane induced by the presence of COSTAR shall not be more than 0.5 visible magnitude per arcsec square when pointing at least 50 degrees from the sun, 30 degrees from the Moon and 80 degrees from the bright Earth limb.

This paragraph was not verified, waiver required.

In addition, the stray light level induced by the presence of COSTAR when a 0 visible magnitude object is in the telescope field-of-view, but outside of a 1 arcmin radius centered on the LOS of the instrument aperture in use, shall be less than 23rd magnitude/arcsec square within the field-of-view of the GHRS, FOS, or FOC.

This paragraph was not verified, waiver required.

23. Need for Deviation/Waiver

The two paragraphs identified in 22 could not be verified because the complexity of the analysis required to accommodate the existing OTA and focal plane geometry in addition to the COSTAR geometry was not achievable within the available budget. The analysis was started but not completed. It is estimated that at least an additional man year and also computer CPU time over this period is required to complete an adequate analysis.

24. Corrective Action Taken

Since the analysis was not completed, additional stray light testing was conducted to identify if any gross sources of stray light could be identified. This testing involved using a HeNe laser and probing suspected stray light sources on the COSTAR structure. Several potential stray light sources were identified as indicated below:

(NEW PAGE CREATED BY IRN 107)

- GHRS M2 arm heater tape flex cable
- GHRS M2 arm launch snubber
- FOS and GHRS M1 mirror bezels
- FOC F/96 and F/48 M1 mirror chamfers/uncoated annulus.

Stray light baffles were fabricated and added to the COSTAR instrument to eliminate these potential stray light sources.

A system level stray light test was also added during optical performance verification testing in the RAS/HOMS. The intent of this test was to verify that no direct light paths to the ASI apertures were present when the COSTAR DOB and arms are deployed. This test also provided information if any significant sources of stray light were present on the COSTAR instrument. This test could not fully verify the stray light magnitude values given in the spec since the RAS/HOMS test facility itself was not designed to control stray light down below these levels.

No direct light paths to the ASI aperture locations were discovered, and no significant stray light sources on the COSTAR instrument were detected within the sensitivity range of the measurement (a few orders of magnitude).

(NEW PAGE CREATED BY IRN 107)

10.7 STIS Deviations and Waivers

IRN 107

The Space Telescope Imaging Spectrometer (STIS), STE-40, is relieved from the requirements of this ICD to the extent shown on the NASA approved deviation and waiver requests listed below and included on the following pages.

		Page	
10.7.1	IN0037-W-006, STIS Weight	10.7-2	
10.7.2	IN0037-W-005A, STIS Power Waiver	10.7-3	IRN 110
10.7.3	IN0037-W-017A, STIS Radiated EMI/EMC Testing Waiver	10.7-10	IRN 111
10.7.4	IN0037-W-020, STIS Envelope Waiver	10.7-15	
10.7.5	IN0037-W-026, STIS Aft Bulkhead Temperature Waiver	10.7-65	IRN 113
10.7.6	STIS-W-001, STIS Revised Weight Waiver	10.7-66	

(This supersedes page 10.7-1 dated 06 December 1996)

ST-ICD-02E
27 FEBRUARY 1985
IRN 107
24 MARCH 1995

REQUEST FOR DEVIATION / WAIVER (RFD/RFW)

1. DATE (YYMMDD): 94-11-07

PLEASE DO NOT RETURN YOUR COMPLETED FORM TO EITHER OF THESE ADDRESSES. RETURN COMPLETED FORM TO THE GOVERNMENT ISSUING CONTRACTING OFFICER FOR THE CONTRACT/PROCURING ACTIVITY NUMBER LISTED IN ITEM 2 OF THIS FORM.

3. DODAAC:

4. DESIGNATOR

a. TYPED NAME (First, Middle Initial, Last): Ball Aerospace Systems Division

b. ADDRESS (Street, City, State, Zip Code): P.O. Box 1062, Boulder, CO 80306-1062

5. (X one): [ ] DEVIATION [X] WAIVER

6. (X one): [ ] MINOR [X] MAJOR [ ] CRITICAL

7. DESIGNATION FOR DEVIATION / WAIVER

a. MODEL/TYPE	b. CAGE CODE	c. SYS. DESIG.	d. DEV/WAIVER NO.
STIS	13993	IN0037A	IN0037-W-006

8. BASELINE AFFECTED: [ ] FUNCTIONAL [X] ALLOCATED [ ] PRODUCT

9. OTHER SYSTEM/CONFIGURATION ITEMS AFFECTED: [ ] YES [X] NO

10. TITLE OF DEVIATION / WAIVER: STIS WEIGHT

11. CONTRACT NO. AND LINE ITEM: NAS5-29370

12. PROCURING CONTRACTING OFFICER
a. NAME (First, Middle Initial, Last): Steve Kramer
b. CODE: 286
c. TELEPHONE NO: 301/286-6687

13. CONFIGURATION ITEM NOMENCLATURE: STIS

14. CLASSIFICATION OF DEFECT
a. CI NO.:
b. DEFECT NO:
c. DEFECT CLASSIFICATION: [ ] MINOR [X] MAJOR [ ] CRITICAL

15. NAME OF LOWEST PART/ASSEMBLY AFFECTED: STIS

16. PART NO. OR TYPE DESIGNATION: 521000

17. EFFECTIVITY: Serial Number -001 and up

18. RECURRING DEVIATION / WAIVER: [ ] YES [X] NO

19. EFFECT ON COST / PRICE: None if approved

20. EFFECT ON DELIVERY SCHEDULE: None if approved

21. EFFECT ON INTEGRATED LOGISTICS SUPPORT, INTERFACE OR SOFTWARE
Interface with SIPE and Carrier (ORUC) to be evaluated.

22. DESCRIPTION OF DEVIATION / WAIVER
STIS weight will be 805 lbs which has been broken down to 693 (normal) plus 97 (maturity) plus 15 (contingency) C.G. is P1= -40.89, P2=10.28, P3=10.12

23. NEED FOR DEVIATION / WAIVER
Paragraph 4.5.3 of ST-ICD-02E requires a maximum weight of 760 lbs with a center of gravity (C.G.) at P1= -20 to -50, P2=12±1, P3=12±1

24. CORRECTIVE ACTION TAKEN
70 lbs has been removed from STIS by redesign with a graphite epoxy enclosure. Further weight reduction will be cost and schedule impact.

25. SUBMITTING ACTIVITY
a. TYPED NAME (First, Middle Initial, Last): Russ R. Howard
b. TITLE: Project Engineer Quality Assurance
c. SIGNATURE: [signature]

26. APPROVAL/DISAPPROVAL: a. RECOMMEND [ ] a. APPROVAL [ ] a. DISAPPROVAL

b. APPROVAL: [X] APPROVED [ ] DISAPPROVED
c. GOVERNMENT ACTIVITY: NASA/GSFC Contracting Officer
d. TYPED NAME (First, Middle Initial, Last):
e. SIGNATURE: [signature]
f. DATE SIGNED (YYMMDD): 09/14/95

g. APPROVAL: [ ] APPROVED [ ] DISAPPROVED
h. GOVERNMENT ACTIVITY:
i. TYPED NAME (First, Middle Initial, Last):
j. SIGNATURE:
k. DATE SIGNED (YYMMDD):

DD Form 1694, APR 92

(NEW PAGE CREATED BY IRN 107)

REQUEST FOR DEVIATION/WAIVER (RFD/RFW)

1. DATE (YYMMDD): 95-06-06

Public reporting burden for this collection of information is estimated to average 2 hours per response, including the time for reviewing instructions, searching existing data sources, gathering and maintaining the data needed and completing and reviewing the collection of information. Send comments regarding this burden estimate or any other aspect of this collection of information, including suggestions for reducing this burden to Washington Headquarters Services, Directorate for Information Operations and Reports, 1215 Jefferson Davis Highway, Suite 1204, Arlington, VA 22202-4302, and to the Office of Information and Regulatory Affairs, Office of Management and Budget, Washington, D.C. 20503.

PLEASE DO NOT RETURN YOUR COMPLETED FORM TO EITHER OF THESE ADDRESSES. RETURN COMPLETED FORM TO THE GOVERNMENT ISSUING CONTRACTING OFFICER FOR THE CONTRACT/PROCURING ACTIVITY NUMBER LISTED IN ITEM 2 OF THIS FORM.

2. PROCURING ACTIVITY NUMBER

3. DODAAC

4. ORIGINATOR
a. DAVE FISH/RALPH STOCKER

b. ADDRESS (Street, City, State, Zip code)
a. Ball Aerospace Systems Division
P.O. Box 1062
Boulder, CO 80306

5. (X ONE)
O Deviation X Waiver

6. (X one)
O Minor X Major O Critical

7. DESIGNATION FOR DEVIATION /WAIVER

a. MODEL/TYPE	b. CAGE CODE	c. SYS. DESIG.	d. DEV/WAIVER NO.
STIS	13993	IN0037A	IN0037-W-005A

8. BASELINE AFFECTED
X Functional O Allocated
O Product

9. OTHER SYSTEM CONFIGURATION ITEMS AFFECTED
O YES X NO

10. TITLE OF DEVIATION/WAIVER
STIS POWER

11. CONTRACT NO. AND LINE ITEM
NAS5-29370

12. PROCURING CONTRACTING OFFICER
a. NAME (First, Middle Initial, Last) ROSA ACEVEDO
b. CODE 286
c. TELEPHONE NO 301/286-6993

13. CONFIGURATION ITEM NOMENCLATURE
STIS

14. CLASSIFICATION OF DEFECT
a. CD NO
b. DEFECT NO.
c. DEFECT CLASSIFICATION
O MINOR X MAJOR O CRITICAL

15. NAME OF LOWEST PART/ASSEMBLY AFFECTED
STIS

16. PART NO. OR TYPE DESIGNATION
521000

17. EFFECTIVITY
Serial number -001 and up

18. RECURRING DEVIATION/WAIVER
O YES X NO

19. EFFECT ON COST/PRICE
NONE IF APPROVED

20. EFFECT ON DELIVERY SCHEDULE
NONE IF APPROVED

21. EFFECT ON INTEGRATED LOGISTICS, SUPPORT, INTERFACE OR SOFTWARE
NONE IF APPROVED

22. DESCRIPTION OF DEVIATION/WAIVER

For a cold HST orientation, average per orbit power is 2~~3~~2.5.1 watts with peaks to 2~~4~~3.8 watts (5 minutes). Hold power for a cold HST is 1~~2~~7.5 watts. 10 watts are allowed for analytical uncertainity for average and peak orbital power along with cold hold (see SER SYS-052A). R2

23. NEED FOR DEVIATION/WAIVER

Paragraph 4.6.1.1.4.1 and 4.7 of ST-ICD-02E requires average orbital power of 150 watts, peak power 250 watts (2 min), 174 watts max as part of 150 average and 58 watts hold power.

24. CORRECTIVE ACTION TAKEN
NOT APPLICABLE

25. SUBMITTING ACTIVITY
a. TYPED NAME (First, Middle Initial, Last)
DAVE FISH

b. TITLE
Project Engineer
Quality Assurance

c. SIGNATURE
Dave Fish

26. APPROVAL/DISAPPROVAL
a. RECOMMEND O APPROVAL O DISAPPROVAL

b. APPROVAL
O APPROVED O DISAPPROVED

c. GOVERNMENT ACTIVITY

d. TYPE NAME (First, Middle Initial, Last)

e. SIGNATURE

f. DATE SIGNED (YYMMDD)

g. APPROVAL
X APPROVED O DISAPPROVED

h. GOVERNMENT ACTIVITY
NASA/GSFC

i. TYPED NAME (First, Middle Initial, Last)
Rosa E. Acevedo

j. SIGNATURE

k. DATE SIGNED (YYMMDD)
9/29/95

DD Form 1694, APR 92 Previous editions are obsolete.

(NEW PAGE CREATED BY IRN 110)

Systems Engineering Report

Electro-Optics/Cryogenics Division
P.O. Box 1062
Boulder, Colorado, USA 80306

SER NO. STIS SYS-052 Rev A DATE 11/8/95

SHEET 1 OF 6

PROJECT TITLE	CAGE CODE	CII
STIS	13993	IN0037
		PROJECT CODE 2755

SUBJECT TITLE
STIS Power Requirements

PREPARED BY	DEPT. NO.	DATE	APPROVED BY	DATE
R.B. Stocker		11/8/94		

SUMMARY: STIS exceeds the power requirements allowed by ST-ICD-02E for both operation and hold. During operation with three detectors on and a cold HST orientation, the orbital average power will be 225.1 watts with peaks up to 234.8 watts. During cold hold power required will be 127.5watts.

DISCUSSION: Four STIS power conditions were examined which were:

a. Three detectors on (operational) in a cold HST orientation.
b. Three detectors on in a normal (90% of the time) HST thermal orientation.
c. Three detectors on (operational) in a hot HST orientation.
d. Hold power required for a cold HST orientation.
e. One to two detectors operational (power saving mode) in a normal HST thermal orientation.

For conditions (a) and (b), orbital operational time lines involved target acquisition with the CCD detector for the first 15 minutes followed by 35 minutes each doing Band 4, Band 3, and Band 2 and Band 1 science. During target acquisition, extra power is required for movement of the mode select and shutter mechanisms along with flashing of lamps for slit wheel aperture position knowledge on the STIS detectors. During Band 2 and Band 1 science (30 minutes) the mode select mechanism power have been book kept for scans required during the echelle modes. Table 1 represents power for operation in condition (a) (Cold HST and three detectors on) with an orbital average of 225.1 watts. Using the heater power difference of 26.7 watts going from a cold HST to a hot thermal HST condition, shows an orbital average power of 198.4 watts for condition (c) operations. (Table III.)

For condition (e), orbital operational time lines involved target acquisition with the MAMA detectors for the first 15 minutes followed by 35 minutes each of Band 2, Band 1, Band 4 and Band 3 science. The operational time lines have been constrained by not turning power on for the CCD and its electronics until they are required for science and putting the MAMA detectors in a stand by mode, which leaves the charge amplifiers on in the electronics section, once science has been completed in Band 2 and Band 1. Table V represents power for operation in condition (c) with an orbital average of 210.1.

For condition (d), hold power is required for the MEB converters, CCD thermal electric coolers which remain on always, MAMA heaters which prevent the electronics section from going below 0°C and instrument heaters which maintain the optical bench compartment around ambient temperatures. Table IV represents cold hold power summary, with power required of 127.5 watts.

DISTRIBUTION

H. Eck	J. Hetlinger
D. Hood	T. Dixon
R. Nyquist	H. Garner
C. Vanhouten	B. Woodruff
D. Fish	

(NEW PAGE CREATED BY IRN 110)

POWER_W.XLS

Condition (a) Cold Operate

	Watts	T.A. (W/CCD)	T.A. (W/CCD)	T.A. (W/CCD)	B4 SCI	B4 SCI	B3 SCI	B3 SCI	B2 SCI	B2 SCI	B1 SCI	B1 SCI
Time (Min)		5	5	5	5	30	5	30	5	30	5	30
MEB	51.26	51.26	51.26	51.26	51.26	51.26	51.26	51.26	51.26	51.26	51.26	51.26
LVPS eff	48.63	48.63	48.63	48.63	48.63	48.63	48.63	48.63	48.63	48.63	48.63	48.63
CEB/CCD	19.00	19.00	19.00	19.00	19.00	19.00	19.00	19.00	0.00	0.00	0.00	0.00
TEC	7.30	7.30	7.30	7.30	7.30	7.30	7.30	7.30	7.30	7.30	7.30	7.30
MAMA 1	20.80	20.80	20.80	20.80	20.80	20.80	20.80	20.80	20.80	20.80	20.80	20.80
MAMA 2	20.80	20.80	20.80	20.80	20.80	20.80	20.80	20.80	20.80	20.80	20.80	20.80
Tungsten	6.95											
Krypton	17.60											
Deuterium	17.60											
Pt-Cr-Ne	7.60		7.60		7.60		7.60		7.60		7.60	
Pt-Cr-Ne	7.60											
Pt-Cr-Ne	7.60											
Heaters	47.60	47.60	47.60	47.60	47.60	47.60	47.60	47.60	47.60	47.60	47.60	47.60
RIU A	2.00	2.00	2.00	2.00	2.00	2.00	2.00	2.00	2.00	2.00	2.00	2.00
RIU B	1.50	1.50	1.50	1.50	1.50	1.50	1.50	1.50	1.50	1.50	1.50	1.50
MSM	3.40	3.40		3.40	3.40		3.40		3.40	3.40	3.40	3.40
CCD shtter	4.40	4.40	4.40	4.40	4.40	4.40	4.40	4.40				
SW or												
CIM or												
MIS or												
EB =	0.50	0.50	0.50	0.50	0.50	0.50	0.50	0.50	0.50	0.50	0.50	0.50
Total	292.14	227.19	231.39	227.19	234.79	223.79	234.79	223.79	211.39	203.79	211.39	203.79
Watts-Min		1135.95	1156.95	1135.95	1173.95	6713.7	1173.95	6713.7	1056.95	6113.7	1056.95	6113.7
Avg Watts/Obs =		216.42										
Peak Avg Watts/Orbit		225.12										

Note 1: LVPS provides P.S. efficiency losses due to CEB, Heaters, TEC, MAMA's, MSM (worst case scanning mode), and slit wheel idle
Note 2: DIT box and corrector mechanism are off.
Note 3: MSM is in worst case scanning mode

Condition (b) Nominal Operate (90% of the time)

Time (Min)	Watts	T.A. (W/CCD) 5	T.A. (W/CCD) 5	T.A. (W/CCD) 5	B4 SCI 5	B4 SCI 30	B3 SCI 5	B3 SCI 30	B2 SCI 5	B2 SCI 30	B1 SCI 5	B1 SCI 30
MEB	51.26	51.26	51.26	51.26	51.26	51.26	51.26	51.26	51.26	51.26	51.26	51.26
LVPS eff	47.28	47.28	47.28	47.28	47.28	47.28	47.28	47.28	47.28	47.28	47.28	47.28
CEB/CCD	19.00	19.00	19.00	19.00	19.00	19.00	19.00	19.00	0.50	0.50	0.50	0.50
TEC	12.10	12.10	12.10	12.10	12.10	12.10	12.10	12.10	12.10	12.10	12.10	12.10
MAMA 1	20.80	20.80	20.80	20.80	20.80	20.80	20.80	20.80	20.80	20.80	20.80	20.80
MAMA 2	20.80	20.80	20.80	20.80	20.80	20.80	20.80	20.80	20.80	20.80	20.80	20.80
Tungsten	6.95											
Krypton	17.60											
Deuterium	17.60											
Pt-Cr-Ne	7.60		7.60		7.60		7.60		7.60		7.60	
Pt-Cr-Ne	7.60											
Pt-Cr-Ne	7.60											
Heaters	33.10	33.10	33.10	33.10	33.10	33.10	33.10	33.10	33.10	33.10	33.10	33.10
RIU A	2.00	2.00	2.00	2.00	2.00	2.00	2.00	2.00	2.00	2.00	2.00	2.00
RIU B	1.50	1.50	1.50	1.50	1.50	1.50	1.50	1.50	1.50	1.50	1.50	1.50
MSM	3.40	3.40		3.40	3.40		3.40		3.40	3.40	3.40	3.40
CCD shtter	4.40	4.40	4.40	4.40	4.40	4.40	4.40	4.40				
SW or												
CIM or												
MIS or												
EB =	0.50	0.50	0.50	0.50	0.50	0.50	0.50	0.50	0.50	0.50	0.50	0.50
Total	281.09	216.14	220.34	216.14	223.74	212.74	223.74	212.74	200.84	193.24	200.84	193.24
Watts-Min		1080.7	1101.7	1080.7	1118.7	6382.2	1118.7	6382.2	1004.2	5797.2	1004.2	5797.2
Avg Watts/Obs =		205.60										
Peak Avg Watts/Orbit		214.10										

Note 1: LVPS provides P.S. efficiency losses due to CEB, Heaters, TEC, MAMA's, MSM (worst case scanning mode), and sft wheel idle
Note 2: DIT box and corrector mechanism are off.
Note 3: MSM is in worst case scanning mode

Condition (c) Hot Operate

	Watts	T.A. (W/CCD)	T.A. (W/CCD)	T.A. (W/CCD)	B4 SCI	B4 SCI	B3 SCI	B3 SCI	B2 SCI	B2 SCI	B1 SCI	B1 SCI
Time (Min)		5	5	5	5	30	5	30	5	30	5	30
MEB	51.26	51.26	51.26	51.26	51.26	51.26	51.26	51.26	51.26	51.26	51.26	51.26
LVPS eff	47.78	47.78	47.78	47.78	47.78	47.78	47.78	47.78	47.78	47.78	47.78	47.78
CEB/CCD	19.00	19.00	19.00	19.00	19.00	19.00	19.00	19.00	0.50	0.50	0.50	0.50
TEC	17.50	17.50	17.50	17.50	17.50	17.50	17.50	17.50	17.50	17.50	17.50	17.50
MAMA 1	20.80	20.80	20.80	20.80	20.80	20.80	20.80	20.80	20.80	20.80	20.80	20.80
MAMA 2	20.80	20.80	20.80	20.80	20.80	20.80	20.80	20.80	20.80	20.80	20.80	20.80
Tungston	6.95											
Krypton	17.60											
Deuterium	17.60											
Pt-Cr-Ne	7.60		7.60		7.60		7.60		7.60		7.60	
Pt-Cr-Ne	7.60											
Pt-Cr-Ne	7.60											
Heaters	11.50	11.50	11.50	11.50	11.50	11.50	11.50	11.50	11.50	11.50	11.50	11.50
RIU A	2.00	2.00	2.00	2.00	2.00	2.00	2.00	2.00	2.00	2.00	2.00	2.00
RIU B	1.50	1.50	1.50	1.50	1.50	1.50	1.50	1.50	1.50	1.50	1.50	1.50
MSM	3.40	3.40		3.40	3.40		3.40		3.40	3.40	3.40	3.40
CCD shtter	4.40	4.40	4.40	4.40	4.40	4.40	4.40	4.40				
SW or												
CIM or												
MIS or												
EB =	0.50	0.50	0.50	0.50	0.50	0.50	0.50	0.50	0.50	0.50	0.50	0.50
Total	265.39	200.44	204.64	200.44	208.04	197.04	208.04	197.04	185.14	177.54	185.14	177.54
Watts-Min		1002.2	1023.2	1002.2	1040.2	5911.2	1040.2	5911.2	925.7	5326.2	925.7	5326.2
Avg Watts/Obs =		189.90										
Peak Avg Watts/Orbit		198.40										

Note 1: LVPS provides P.S. efficiency losses due to CEB, Heaters, TEC, MAMA's, MSM (worst case scanning mode), and sift wheel idle
Note 2: DIT box and corrector mechanism are off.
Note 3: MSM is in worst case scanning mode

POWER_W.XLS

Condition (d) Cold Hold

Time (Min)	Watts
MEB	4.31
LVPS eff	18.44
CEB/CCD	0.00
TEC	5.30
MAMA 1	4.90
MAMA 2	5.00
Tungston	0.00
Krypton	0.00
Deuterium	0.00
Pt-Cr-Ne	0.00
Pt-Cr-Ne	0.00
Pt-Cr-Ne	0.00
Heaters	86.00
RIU A	2.00
RIU B	1.50
MSM	0.00
CCD shtter	0.00
SW or	
CIM or	
MIS or	
EB =	0.00
Total	127.45
Watts-Min	
Peak Avg Watts/Orbit	127.45

Note 1: LVPS provides P.S. efficiency losses due to CEB, Heaters, TEC, MAMA's, MSM (worst case scanning mode), and slit wheel idle
Note 2: Power required for MAMA 1 and MAMA 2 is heater power only

(NEW PAGE CREATED BY IRN 110)

Condition (e) Power Saving Mode (Nominal Operate)

	Watts	T.A. (w/oCCD)	T.A. (w/o CCD)	T.A. (w/o CCD)	B2 SCI	B2 SCI	B1 SCI	B1 SCI	B4 SCI	B4 SCI	B3 SCI	B3 SCI
Time (Min)		5	5	5	5	30	5	30	5	30	5	30
MEB	51.26	51.26	51.26	51.26	51.26	51.26	51.26	51.26	51.26	51.26	51.26	51.26
LVPS eff	47.28	47.28	47.28	47.28	47.28	47.28	47.28	47.28	47.28	47.28	47.28	47.28
CEB/CCD	19.00	0.00	0.00	0.00	0.00	0.00	19.00	19.00	19.00	19.00	19.00	19.00
TEC	12.10	12.10	12.10	12.10	12.10	12.10	12.10	12.10	12.10	12.10	12.10	12.10
MAMA 1	20.80	20.80	20.80	20.80	20.80	20.80	20.80	20.80	20.80	6.00	6.00	6.00
MAMA 2	20.80	20.80	20.80	20.80	20.80	20.80	6.00	6.00	6.00	6.00	6.00	6.00
Tungston	6.95											
Krypton	17.60											
Deuterium	17.60											
Pt-Cr-Ne	7.60		7.60		7.60		7.60		7.60		7.60	
Pt-Cr-Ne	7.60											
Pt-Cr-Ne	7.60											
Heaters	33.10	33.10	33.10	33.10	33.10	33.10	33.10	33.10	33.10	33.10	33.10	33.10
RIU A	2.00	2.00	2.00	2.00	2.00	2.00	2.00	2.00	2.00	2.00	2.00	2.00
RIU B	1.50	1.50	1.50	1.50	1.50	1.50	1.50	1.50	1.50	1.50	1.50	1.50
MSM	3.40			3.40	3.40	3.40	3.40	3.40	3.40		3.40	
CCD shtter	4.40								4.40	4.40	4.40	4.40
SW or												
CIM or												
MIS or												
EB =	0.50	0.50	0.50	0.50	0.50	0.50	0.50	0.50	0.50	0.50	0.50	0.50
Total	281.09	189.34	196.94	192.74	200.34	192.74	204.54	196.94	208.94	183.14	194.14	183.14
Watts-Min		946.7	984.7	963.7	1001.7	5782.2	1022.7	5908.2	1044.7	5494.2	970.7	5494.2
Avg Watts/Obs =		191.06										
Peak Avg Watts/Orbit		210.13										

Note 1: LVPS provides P.S. efficiency losses due to CEB, Heaters, TEC, MAMA's, MSM (worst case scanning mode), and slit wheel idle
Note 2: DIT box and corrector mechanism are off.
Note 3: MSM is in worst case scanning mode

REQUEST FOR DEVIAT N W/AIVER (RFD/RFW)

1. DATE (YYMMM) 96/09/12

IRN 111

06 DECEMBER

Public reporting burden for this collection of information is estimated to average 2 hours per response, including the time for reviewing instructions, searching existing data sources, gathering and maintaining the data needed and completing and reviewing the collection of information. Send comments regarding this burden estimate or any other aspect of this collection of information, including suggestions for reducing this burden to Washington Headquarters Services, Directorate of Information Operations and Reports, 1215 Jefferson Davis Highway, Suite 1204, Arlington, VA 22202-4302, and to the Office of Information and Regulatory Affairs, Office of Management and Budget, Washington, D.C. 20503

PLEASE DO NOT RETURN YOUR COMPLETED FORM TO EITHER OF THESE ADDRESSES. RETURN COMPLETED FORM TO THE GOVERNMENT ISSUING CONTRACTING OFFICER FOR THE CONTRACT/PROCURING ACTIVITY NUMBER LISTED IN ITEM 2 OF THIS FORM

2. PROCURING ACTIVITY NUMBER

3. DODAAC

4. ORIGINATOR

a. Ball Aerospace Technologies Corp

Dave L. Fish

b. ADDRESS (Street, City, State, Zip code)
P.O. Box 1062
Boulder, CO 80306-1062

5. (X one) ○ Deviation X Waiver

6. (X one) ○ Minor X Major ○ Critical

7. DESIGNATION FOR DEVIATION /WAIVER

a. MODEL/TYPE	b. CAGE CODE	c. SYS. DESIG.	d. DEV/WAIVER NO.
STIS	13993	IN0037A	IN0037-W-017A

8. BASELINE AFFECTED: X Functional ○ Allocated ○ Product

9. OTHER SYSTEM CONFIGURATION ITEMS AFFECTED: ○ YES X NO

10. TITLE OF DEVIATION/WAIVER
Radiated EMI/EMC Testing

11. CONTRACT NO. AND LINE ITEM
NAS5-29370

12. PROCURING CONTRACTING OFFICER
a. NAME (First, Middle Initial, Last) Rosa Acevedo
b. CODE 286
c. TELEPHONE NO (301) 286-6993

13. CONFIGURATION ITEM NOMENCLATURE
Space Telescope Imaging Spectrograph
STIS

14. CLASSIFICATION OF DEFECT
a. CD NO
b. DEFECT NO.
c. DEFECT CLASSIFICATION NA ○ MINOR ○ MAJOR ○ CRITICAL

15. NAME OF LOWEST PART/ASSEMBLY AFFECTED
STIS

16. PART NO. OR TYPE DESIGNATION
521000-500

17. EFFECTIVITY
ALL

18. RECURRING DEVIATION/WAIVER ○ YES X NO

19. EFFECT ON COST/PRICE
None if approved

20. EFFECT ON DELIVERY SCHEDULE
None if approved

21. EFFECT ON INTEGRATED LOGISTICS, SUPPORT, INTERFACE OR SOFTWARE
None if approved

22. DESCRIPTION OF DEVIATION/WAIVER
A. Radiated emissions shall be performed at discrete frequencies - 200 to 300 MHz and 1.77 to 2.3 GHz. Pass/Fail criteria for radiated emissions per ICD-02E figures 4.7-8 and 4.7-9.
B. See attachment

23. NEED FOR DEVIATION/WAIVER
A. Per PCM 96-509 and PCM 96-513 B. No time to fix GSE

24. CORRECTIVE ACTION TAKEN
None required

25. SUBMITTING ACTIVITY

a. TYPED NAME (First, Middle Initial, Last) Dave L. Fish
b. TITLE Product Assurance Manager
c. SIGNATURE Dave Fish

26. APPROVAL/DISAPPROVAL
a. RECOMMEND ○ APPROVAL ○ DISAPPROVAL

b. APPROVAL X APPROVED ○ DISAPPROVED
c. GOVERNMENT ACTIVITY Deputy Associate Director of Flt. Projects for HST

d. TYPE NAME (First, Middle Initial, Last) James S. Barrowman
e. SIGNATURE James S. Barrowman
f. DATE SIGNED (YYMMDD) 961206

g. APPROVAL X APPROVED ○ DISAPPROVED
h. GOVERNMENT ACTIVITY Contracting Officer

i. TYPED NAME (First, Middle Initial, Last) Rosa Acevedo
j. SIGNATURE Rosa Acevedo
k. DATE SIGNED (YYMMDD) 961220

DD Form 1694, APR 92 Previous editions are obsolete.

(NEW PAGE CREATED BY IRN 111)

IN0037-W-017A Continued

23. Radiated emissions testing (RE 02) on STIS showed an out of spec condition for narrow band as shown on Figure 30-4. RE 02 was repeated with STIS powered OFF except for the RIU and the spectrum was nearly identical as shown on Figure 30-3. Finally, STIS and the RIU were powered OFF, with only the STIS GSE powered ON and again the spectrum was nearly identical as shown in Figure 30-2. Our conclusion was that the GSE is the major contributor to the apparent out of spec condition. The exceedances appear similar to but less than those measured on FOS and FOC. See Waivers FOS-029 and FOC-015.

E.U.T. : STIS S21000-500 SN:001
TEST PROCEDURE :S30725
COMMENTS :AMBIENT-GSE ON/STIS OFF
TEST ENGINEER :R. HANSEN

EMI-R207

DATE 13 Jul 1996

SCAN PARAMETERS — TEST TITLE :ST-ICD-02E RE NB 14K-1G

Rvr	Start Freq	Stop Freq	Bandwidth	Atten	Detector	Transducer
17	14 kHz	30 MHz	1 kHz	0 dB	PEAK	B-3301B ACT ROD
37	30 MHz	200 MHz	10 kHz	0 dB	PEAK	B-3108 PwrBicon
37	200 MHz	1 GHz	10 kHz	0 dB	PEAK	B-3101 1Meter

GLOBAL PARAMETERS

BROAD BAND CORRECTION: NO | SWEEP RATE: 4 Samples/Sec

LIMIT LINE : ST-ICD-02E RE NB

SCANS PER SEGMENT : 1

SEG 1 START TIME: 18:39:14 STOP TIME: 18:43:42
SEG 2 START TIME: 18:43:42 STOP TIME: 18:45:48
SEG 3 START TIME: 18:45:48 STOP TIME: 18:47:59

Maximum Scan Data : ST-ICD-02E RE NB 14K-1G

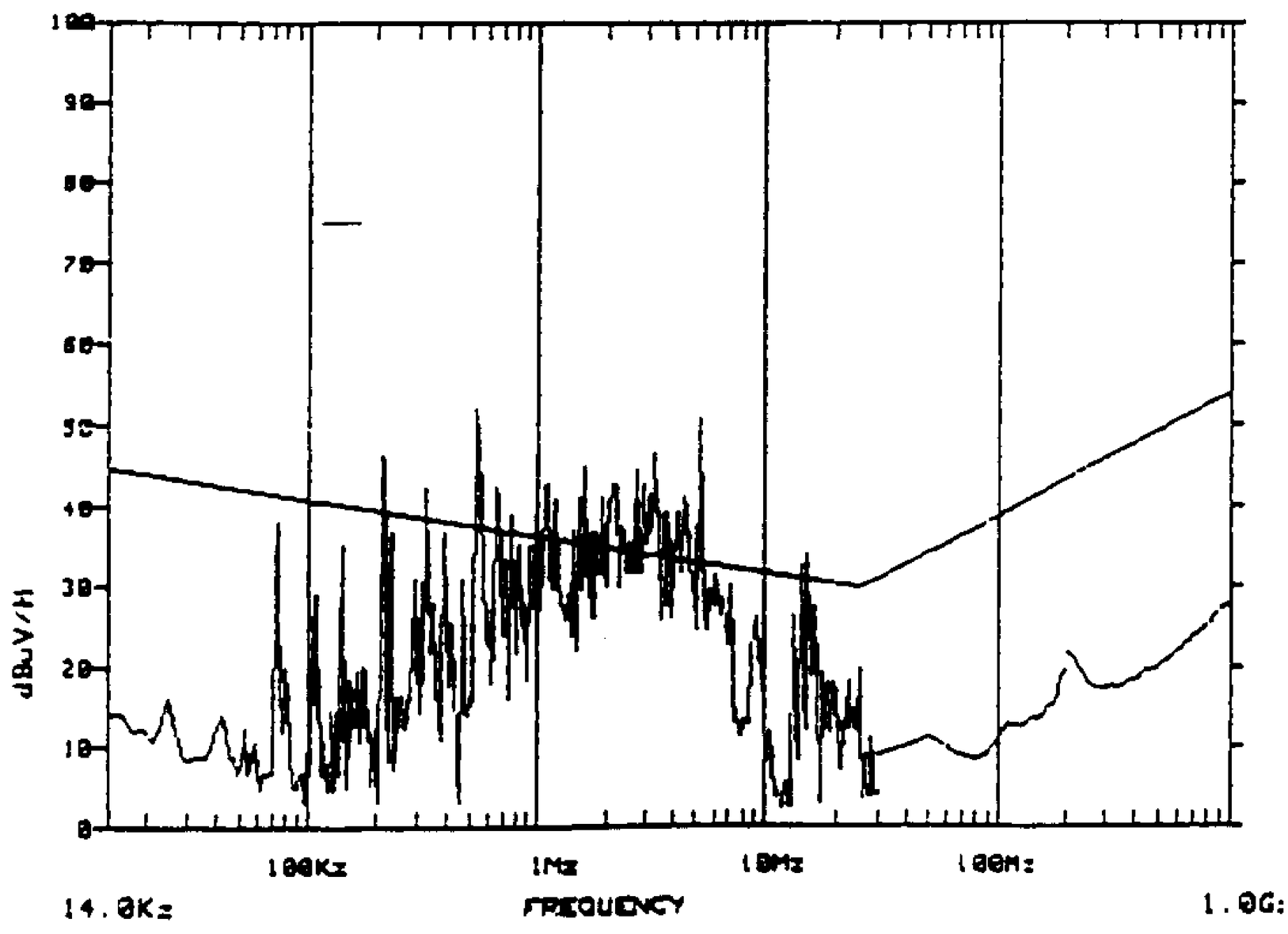

Figure 30-2. Radiated emissions (RE02) narrowband ambient, 14 kHz to 1 GHz.

(NEW PAGE CREATED BY IRN 111)

E.U.T. : STIS 521000-500 SN:001
TEST PROCEDURE :S30725
COMMENTS :RIU ON ONLY
TEST ENGINEER :R. HANSEN

EMI-R207

DATE 13 Jul 1996

SCAN PARAMETERS					TEST TITLE :ST-ICD-02E RE NB 14K-16	
Rvr	Start Freq	Stop Freq	Bandwidth	Atten	Detector	Transducer
17	14 kHz	30 MHz	1 kHz	0 dB	PEAK	B-33018 ACT ROD
37	30 MHz	200 MHz	10 kHz	0 dB	PEAK	B-3108 PwrBicon
37	200 MHz	1 GHz	10 kHz	0 dB	PEAK	B-3101 1Meter

GLOBAL PARAMETERS

BROAD BAND CORRECTION: NO | SWEEP RATE: 4 Samples/Sec

LIMIT LINE : ST-ICD-02E RE NB

SCANS PER SEGMENT : 1

SEG 1 START TIME: 18:50:21 STOP TIME: 18:55:25
SEG 2 START TIME: 18:55:25 STOP TIME: 18:57:32
SEG 3 START TIME: 18:57:32 STOP TIME: 18:59:33

Maximum Scan Data : ST-ICD-02E RE NB 14K-16

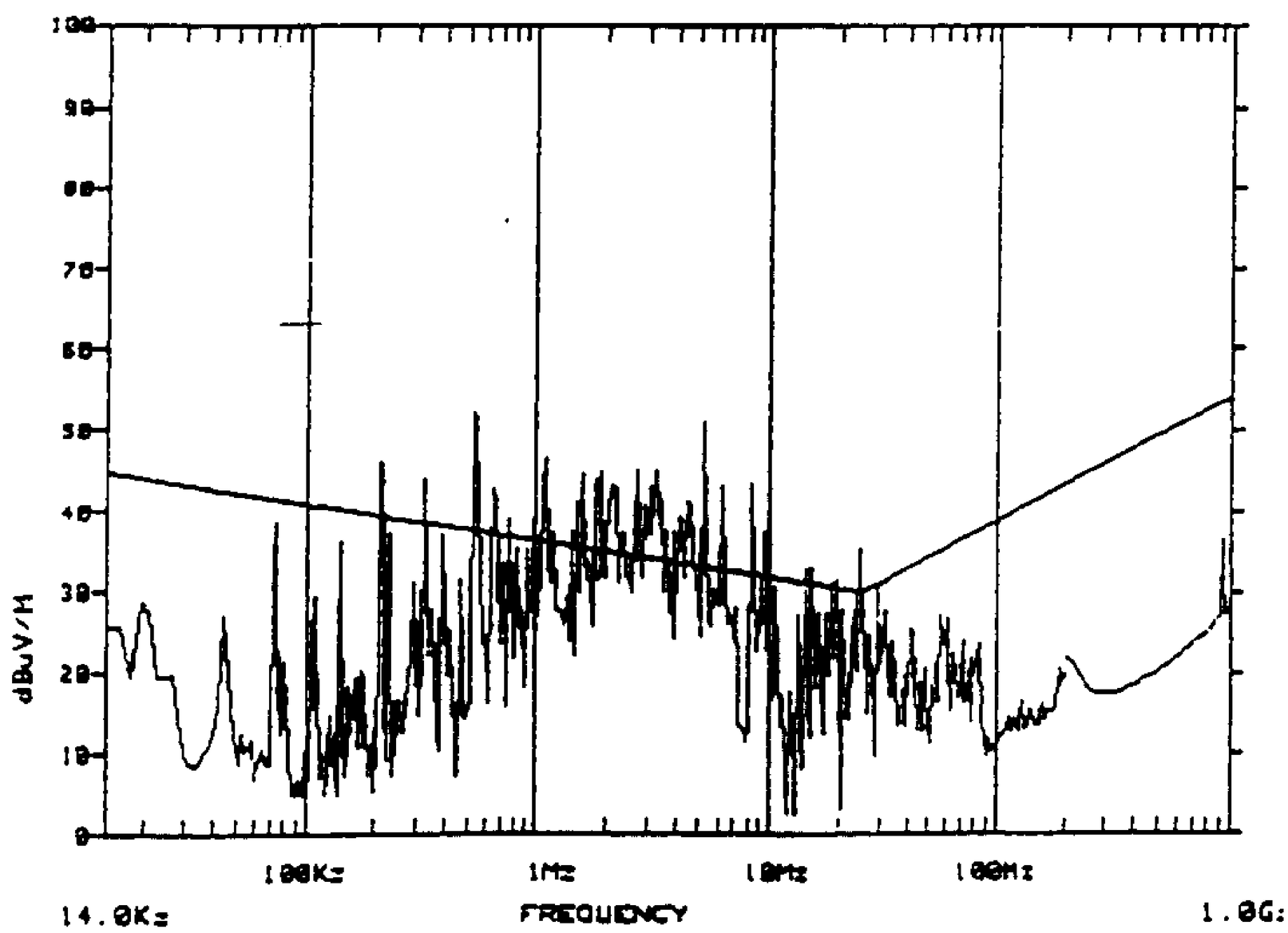

Figure 30-3. Radiated emissions (RE02) narrowband with RIU on, 14 kHz to 1 GHz.
(NEW PAGE CREATED BY IRN 111)

E.U.T. : STIS 521000-500 SN:001
TEST PROCEDURE :550726
COMMENTS :2 MAMA'S/1 CCD/SIDE 1 ON
TEST ENGINEER :R. HANSEN

EMI-R207

DATE 12 Jul 1996

SCAN PARAMETERS — TEST TITLE :ST-ICD-02E RE/NB(14KHz-10Hz)A

Rvr	Start Freq	Stop Freq	Bandwidth	Atten	Detector	Transducer
17	14 kHz	30 MHz	1 kHz	0 dB	PEAK	B-33018 ACT ROD
37	30 MHz	200 MHz	10 kHz	0 dB	PEAK	B-3108 PwrBicon
37	200 MHz	1 GHz	10 kHz	0 dB	PEAK	B-3101 1Meter
67	1 GHz	10 GHz	100 kHz	0 dB	PEAK	B-3115/1-18

GLOBAL PARAMETERS

BROAD BAND CORRECTION: NO — SWEEP RATE: 4 Samples/Sec

LIMIT LINE : ST-ICD-02E RE NB

SCANS PER SEGMENT : 1

SEG 1 START TIME: 19:26:09 STOP TIME: 19:30:37
SEG 2 START TIME: 19:30:37 STOP TIME: 19:36:20
SEG 3 START TIME: 19:36:20 STOP TIME: 19:39:21
SEG 4 START TIME: 19:39:21 STOP TIME: 19:45:07

Maximum Scan Data : ST-ICD-02E RE/NB(14KHz-10Hz)A

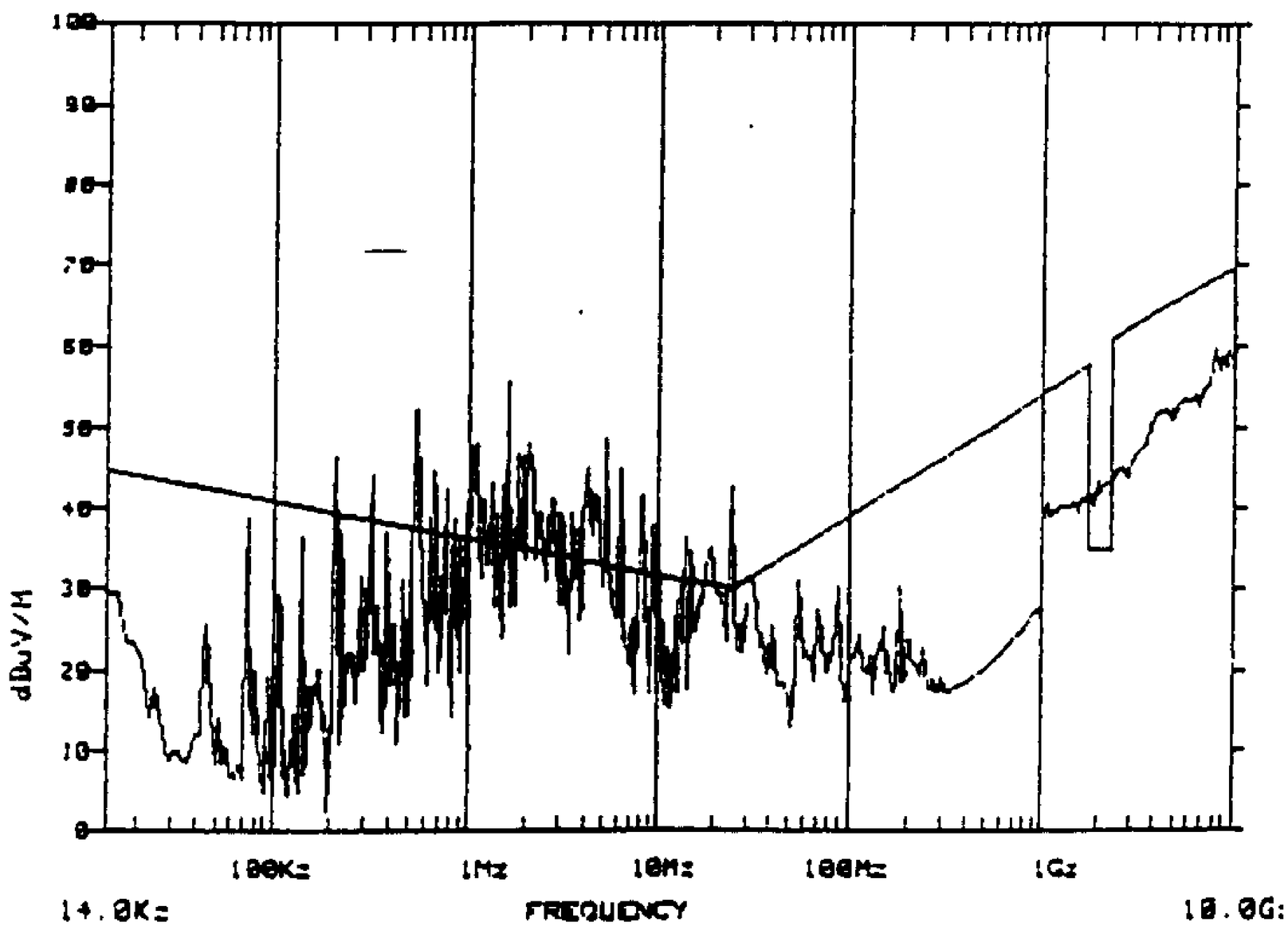

Figure 30-4. Radiated emissions (RE02) narrowband, 14 kHz to 10 GHz.
(NEW PAGE CREATED BY IRN 111)

REQUEST FOR DEVIATION/WAIVER (RFD/RFW)

1. DATE YYMMDD: 96/09/13

STP-100-12
27 FEBRUARY 1995
IRN 111
06 DECEMBER 1996

Public reporting burden for this collection of information is estimated to average 2 hours per response, including the time for reviewing instructions, searching existing data sources, gathering and maintaining the data needed and completing and reviewing the collection of information. Send comments regarding this burden estimate or any other aspect of this collection of information, including suggestions for reducing this burden to Washington Headquarters Services, Directorate for Information Operations and Reports, 1215 Jefferson Davis Highway, Suite 1204, Arlington, VA 22202-4302, and to the Office of Information and Regulatory Affairs, Office of Management and Budget, Washington, D.C. 20503.

PLEASE DO NOT RETURN YOUR COMPLETED FORM TO EITHER OF THESE ADDRESSES. RETURN COMPLETED FORM TO THE GOVERNMENT ISSUING CONTRACTING OFFICER FOR THE CONTRACT/PROCURING ACTIVITY NUMBER LISTED IN ITEM 2 OF THIS FORM.

2. PROCURING NUMBER

3. DODAAC

4. ORIGINATOR

a. Dave L. Fish
Ralph Stocker

b. ADDRESS (Street, City, State, Zip code)
Ball Aerospace Technologies Corp
P.O. Box 1062
Boulder, CO 80306-1062

5. (X one) ○ Deviation ☒ Waiver

6. (X one) ○ Minor ☒ Major ○ Critical

7. DESIGNATION FOR DEVIATION/WAIVER

a. MODEL/TYPE	b. CAGE CODE	c. SYS. DESIG.	d. DEV/WAIVER NO.
STIS	13993	IN0037A	IN0037-W-020

8. BASELINE AFFECTED: ○ Functional ☒ Allocated ○ Product

9. OTHER SYSTEM CONFIGURATION ITEMS AFFECTED: ○ YES ☒ NO

10. TITLE OF DEVIATION/WAIVER
STIS Envelope

11. CONTRACT NO. AND LINE ITEM
NAS5-29370

12. PROCURING CONTRACTING OFFICER
a. NAME (First, Middle Initial, Last) Rosa Acevedo
b. CODE 286
c. TELEPHONE NO (301) 286-6993

13. CONFIGURATION ITEM NOMENCLATURE
Space Telescope Imaging Spectrograph
STIS

14. CLASSIFICATION OF DEFECT
a. CD NO
b. DEFECT NO.
c. DEFECT CLASSIFICATION N/A ○ MINOR ○ MAJOR ○ CRITICAL

15. NAME OF LOWEST PART/ASSEMBLY AFFECTED
STIS

16. PART NO. OR TYPE DESIGNATION

17. EFFECTIVITY
S/N 001 & subq

18. RECURRING DEVIATION/WAIVER ○ YES ☒ NO

19. EFFECT ON COST/PRICE
None if approved

20. EFFECT ON DELIVERY SCHEDULE
None if approved

21. EFFECT ON INTEGRATED LOGISTICS, SUPPORT, INTERFACE OR SOFTWARE
Interface with HST or SIPE during installation

22. DESCRIPTION OF DEVIATION/WAIVER
STIS SI Envelope has been exceeded in ~~twenty (20)~~ many places on the external surfaces to accomodate the new HST Thermal Sink Temperatures (See ~~Appendix A~~) NOOS Memorandum dated October 24, 1996 (TE AK-0142A) and NOOS Memorandum dated November 21, 1996 (A16-ST-M14) and cross-reference of exceedances to ST-ZEC-02 figures.

23. NEED FOR DEVIATION/WAIVER
Paragraph 4.3.1 of ICD-02E defines the Envelope requirement for an advanced axial SI which STIS exceeds.

24. CORRECTIVE ACTION TAKEN
STIS has been fit checked in the SIPE and HFMS. Comparison to GHRS ~~(Appendix B)~~ verified HST insertion.
See NOOS Memorandum dated October 24, 1996 (TE-AK-0142A) and NOOS Memorandum dated November 21, 1996 (A16-ST-M14).

25. SUBMITTING ACTIVITY

a. TYPED NAME (First, Middle Initial, Last)	b. TITLE	c. SIGNATURE
Dave L. Fish	Product Assurance Manager	Dave Fish

26. APPROVAL/DISAPPROVAL
a. RECOMMEND ○ APPROVAL ○ DISAPPROVAL

b. APPROVAL ☒ APPROVED ○ DISAPPROVED

c. GOVERNMENT ACTIVITY
Deputy Associate Director of Flt. Projects for HST

d. TYPE NAME (First, Middle Initial, Last)	e. SIGNATURE	f. DATE SIGNED (YYMMDD)
James S. Barrowman	James S. Barrowman	961206

g. APPROVAL ☒ APPROVED ○ DISAPPROVED

h. GOVERNMENT ACTIVITY
Contracting Officer

i. TYPED NAME (First, Middle Initial, Last)	j. SIGNATURE	k. DATE SIGNED (YYMMDD)
Rosa Acevedo	Rosa Acevedo	961223

DD Form 1694, APR 92 — Previous editions are obsolete.

(NEW PAGE CREATED BY IRN 111)

27 FEBRUARY
IRN 111
06 DECEMBER 1996

HUGHES DANBURY OPTICAL SYSTEMS

MEMORANDUM

DATE: October 24, 1996 TE A16-0148A

Rev A

TO: J. Ryan

FROM: Philip Young *Philip J. Young*

RE: STIS Envelope, Latch, and Guide Block Measurements

CC: T. Cole, D. Connolly, L. Farwell, L. Feinberg, L. Furey, J. Gay, HDOS Document Control, R. Heidenreich, D. Jones, LMMS Document Control, H. Sampler, N. Vadlamudi, B. Woodgate,

This memorandum contains the data report for the STIS envelope, latch, and guide block verification based on the AIMS remeasurements of 10/11/96.

Hubble Space Telescope

Flight Systems and Servicing (FS&S)

Program

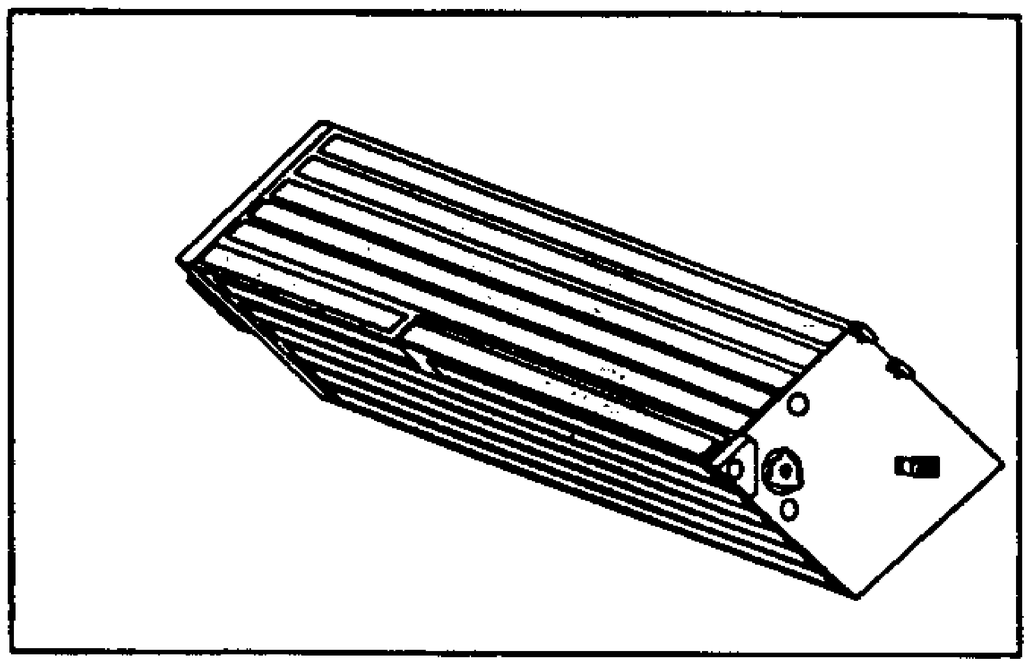

Space Telescope

Imaging Spectrograph

Envelope, Latch, and Guide Block

Measurements

TBD

HUGHES

Danbury Optical Systems

(NEW PAGE CREATED BY IRN 111)
10.7-17

IT-SOL- 18
27 FEBRUARY 1996
IRN 111
06 DECEMBER 1996

Report: TE A16-0148

Space Telescope Imaging Spectrograph Envelope, Latch, and Guide Block Measurements

Publication Review:

Prepared By: Philip J. Young 10/24/96

Philip J. Young, HDOS — Date

Revision	Date	Affected Pages
Release	8/21/96	i-v, 1-25, A1-A6, B1-B11, C1-C16, D1-D3
Revision A	tbd	ii-v, 1, 3, 5, 16, 26-35, E1-E4, F1-F15

(NEW PAGE CREATED BY IRN 111)
10.7-18

Table of Contents

TE A16-0148

SECTION	TITLE	PAGE
1.	SCOPE	1
2.	APPLICABLE DOCUMENTS	1
3.	TEST CONDITIONS, EQUIPMENT, AND FACILITIES	1
4.	TEST SEQUENCE AND SET-UP	1
5.	TEST PROCEDURE	2
6.	CONCLUSIONS AND DISCUSSIONS	2
6.1	DATA SUMMARY	2
6.2	FIT INTO HST	4
6.3	COMPARISON WITH GHRS	11
6.4	OUT-OF-TOLERANCE ITEMS	16
6.4.1	OUTBOARD GUIDE BLOCK AND GUIDE STRIP P1	16
6.4.2	GUIDE BLOCK AND STRIP P3	16
6.4.3	P3 PANEL BOLTS	17
6.4.4	-P2 SIDE BONDING BEADS	17
6.4.5	-P3 SIDE BONDING BEADS	17
6.4.6	-P1 END	18
6.4.7	APERTURE SHUTTER HOUSING	18
6.4.8	GUIDE STRIP P2	18
6.5	"B" LATCH PLACEMENT	20
7.	DATA ANALYSIS	20
7.1	LATCH TOOLS	21
7.2	ERROR ANALYSIS	24
7.3	ACKNOWLEDGMENTS	25
8.0	ENVELOPE REMEASUREMENTS, 10/11/96	26
8.1	SUMMARY AND CONCLUSIONS	26
8.2	APERTURE SHUTTER	32
8.3	+P3 RADIATOR	32
8.4	-P2/-P3 PANEL EPOXY BEADS	33
8.5	GUIDE BLOCKS	33
8.6	GUIDE STRIP	33
8.7	AFT RADIATOR AND -P1 SURFACE	34
8.8	LATCHES	35
APP A	RAW DATA	A-1
APP B	AS-RUN NOTES	B-1
APP C	LATCH TOOL CALIBRATION	C-1
APP D	"B" LATCH TOOL TOLERANCE ANALYSIS	D-1
APP E	10/11/96 RAW DATA	E-1
APP F	10/11/96 AS RUN DATA SHEETS	F-1

(NEW PAGE CREATED BY IRN 111)
10.7-19

List of Figures

Figure	Title	Page
6-1	P-COORDINATE SYSTEM DEFINITION	3
6-2	STIS -P2/-P3 SIDE VIEW	6
6-3	STIS +P2/+P3 SIDE VIEW	7
6-4	STIS SELECTED VIEWS	8
6-5	HST/HFMS/ STIS COMPARISON, AXIAL BAY 1	9
6-6	HST AXIAL BAY 1 GUIDE RAIL ALIGNMENT	12
6-7	STIS GUIDE BLOCK INTERFACE WITH THE OTA RAIL	13
6-8	RAIL/BLOCK FIT WITH NON-PARALLEL GUIDE BLOCKS	14
6-9	COMPARISON OF STIS AND GHRS DIMENSIONS	15
6-10	GUIDE STRIP/RAIL OPERATION	19
7-1	LATCH TOOL CALIBRATION SUMMARY	22
7-2	LATCH TOOL INSTALLATION	23
8-1	STIS -P2/-P3 SIDE VIEW, 10/11/96	28
8-2	STIS +P2/+P3 SIDE VIEW, 10/11/96	29
8-3	STIS SELECTED VIEWS, 10/11/96	30
8-4	STIS AFT RADIATOR BRACKETS, 10/11/96	31

(NEW PAGE CREATED BY IRN 111)
10.7-20

List of Tables

Table	Title	Page
6-1	STIS ENVELOPE MEASUREMENTS	5
7-1	MEASUREMENT ERROR ANALYSIS	25
8-1	STIS ENVELOPE MEASUREMENTS. 10/11/96	27

REV A

(NEW PAGE CREATED BY IRN 111)
10.7-21

1. SCOPE

This report describes measurements of the Space Telescope Imaging Spectrograph (STIS) static envelope, latch, and guide block positions, and latch positions. The test article was the STIS Scientific Instrument (SI), built by Ball Aerospace, which will be flown on the second HST servicing mission to replace the Goddard High Resolution Spectrograph (GHRS) instrument in axial bay 1. Measurements were made using the Analytic Industrial Measurement System III (AIMS III) in the SSDIF clean room on June 28, 1996. In Section 8, Revision A discusses the remeasurements which were made with AIMS on 10/11/96 A

2. APPLICABLE DOCUMENTS

The tests were governed by the following plans and procedures:

a. "Procedures for the AIMS System Calibration Measurements for the STIS" Procedure number P-442-1694 (See Appendix A and B for data and notes)

3. TEST CONDITIONS, EQUIPMENT, AND FACILITIES

Test conditions, equipment, and facilities used to conduct this test were in accordance with those specified in document a. of Section 2.

4. TEST SEQUENCE AND SET-UP

The test sequence and set-up were in accordance with the governing documents. All STIS envelope, latch, and guide Block requirements are defined in terms of the latch coordinate system which is defined by the centers of the A, B, and C latches. Special tools were used for the "B" and "C" latches to provide metrology targets for AIMS as they did for COSTAR and STAR. Both tools were calibrated to verify their accuracies as metrology references. See Appendix C for the calibration data. The test sequence was:

- Install the latch tools on the "B" and "C" latches.
- Set up and scale the AIMS theodolites.
- Measure latch targets.
- Transform AIMS default coordinate system into axial P-coordinates using the latch centers as references.
- Make all remaining measurements of targets in P-coordinates.

5. TEST PROCEDURES

All tests were performed in accordance with the general instructions in the test procedure. Minor procedural deviations were red-lined in the procedure and have no affect on the data reduction. It was expected that the "A" latch sphere would be used to define the latch center by direct measurement with AIMS. However, the view to the latch was restricted to 2 theodolites. More than 2 theodolites were desired to increase accuracy of the coordinate system definition. To double check the Measurement, a precision tooling ball was placed against the "A" latch sphere at several locations and its center measured with AIMS. Then, the AIMS sphere center location routine was used to define the sphere center. The two measurement methods agreed to within 0.0015 inch. The tooling ball method was used to define the coordinate system.

6. CONCLUSIONS AND DISCUSSION

Figure 6-1 illustrates the relationship between the "A", "B", and "C latches and the axial P-coordinate system. Following measurement of the latch metrology targets with AIMS, the default coordinate system was translated to center on the "A" latch spherical bearing. The "C" latch tool provided a target which was 0.71875 inch from the latch hard plane and defined the center of the OTA half latch spherical bearing. The coordinate system was rotated such that the P2 and P3 coordinates of the measured "C" latch target were equal such that a 45 degree angle is defined between the two axes. Finally, the coordinate system was rotated such that the center of the "B" latch tool was located at P2 = P3 = -2.400. All remaining measurements in AIMS were made directly in the P-coordinate system which simplified near real time evaluation of the measurements.

6.1 DATA SUMMARY

There are four reasons for confidence of STIS fit into the HST:

1. The ICD envelope for STIS has been reduced from the original HST development envelope to provide more margin in critical areas.

2. STIS is smaller than GHRS in several key areas.

3. STIS envelope, latches, and guide block/strip locations have been compared favorable with HST as-built data.

4. STIS has been installed successfully into the High Fidelity Mechanical Simulator (HFMS) which is indicative of HST fit.

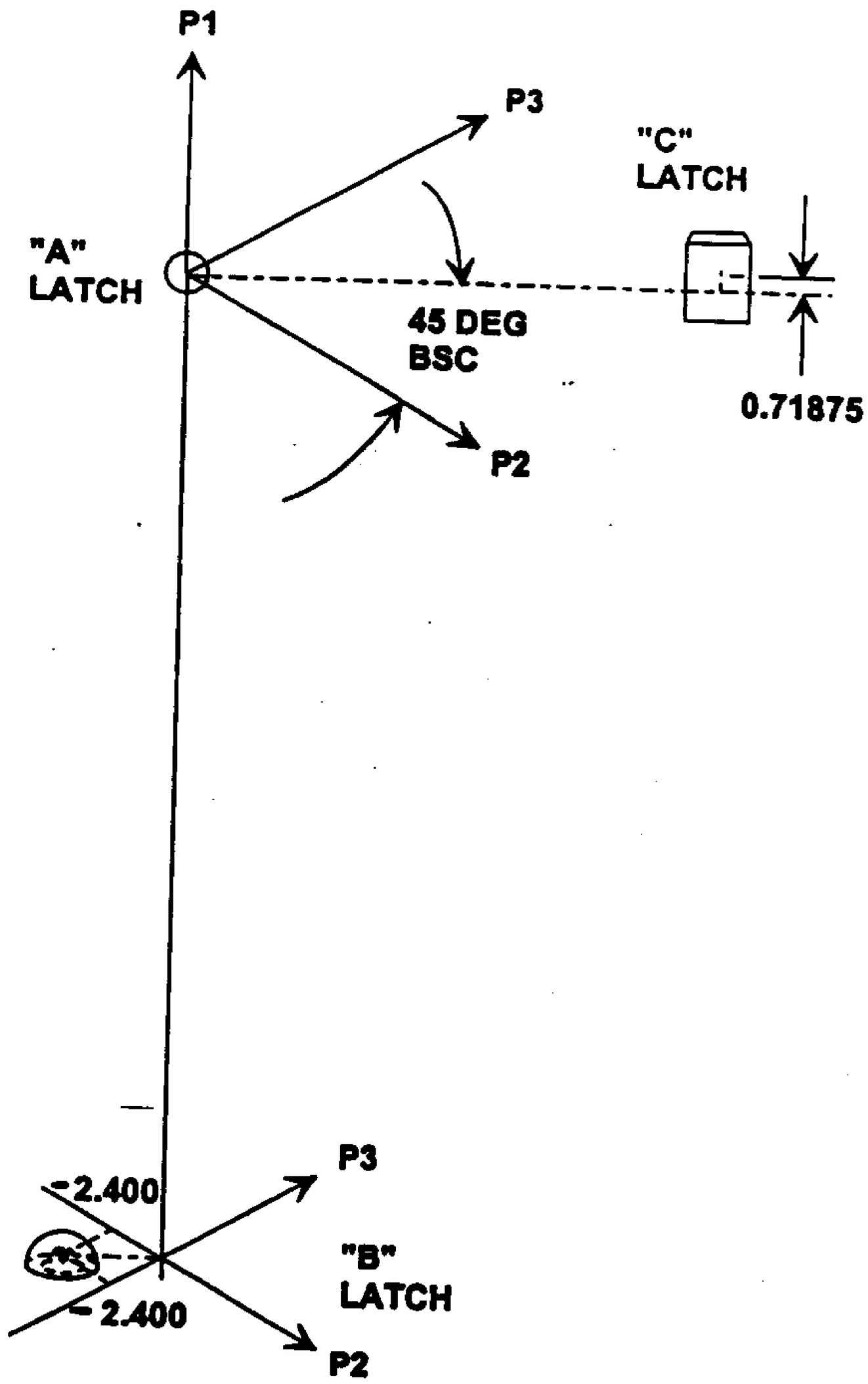

FIGURE 6-1 P-COORDINATE SYSTEM DEFINITION

A

3
REV A

Even though no single item proves that STIS will fit into the HST, the combination of all items provides high confidence in the fit.

The STIS envelope, latch locations, and guide block/strip locations all were measured and found to be acceptable for HST operations. Table 6-1 summarizes the measurement results. The column headed by "No." refers to the AIMS data base number for that measurement point. These points can be identified on the figures which are listed under the column "FIG". The coordinates of the data points are listed in STIS P-coordinates which are defined by the latches. The applicable coordinates are boxed, and the remaining degrees of freedom are somewhat arbitrary and can not be correlated with any specific requirement. The table lists the requirement for each data point as defined in ICD-02, Section 4. The differences between the requirements and the actual measured points are contained in column "DELTA". All out-of-tolerance data points are boxed in the "DELTA" column. Finally, the report sections which discuss the out-of-tolerance items are listed under the column "SECTION".

Figures 6-2 through 6-4 pinpoint the measured target locations on the STIS instrument. Each AIMS data point is identified, its applicable dimension listed, and it is boxed if it is out-of-tolerance.

The only area of concern is the sharp corner on the aperture shutter housing (near target 224 on Figure 6-4). If this corner contacts ballooning MLI during installation, it could tear the MLI or could even jam up, thus preventing further installation. Consideration should be given to rounding this corner.

6.2 FIT INTO HST

Fit of STIS into the HST was investigated and is illustrated in Figure 6-5. This Figure 6-5 contains measured data for the HFMS, as-built data of the HST from the HST metrology book (SMR-1092), the STIS ICD-02 requirements, and the as-built STIS dimensions. Specific STIS coordinate values apply when the instrument is latched up in the OTA or HFMS.

Comparison to the HST is limited since there is little documentation of as-built dimensions of the HST without reviewing the build books. Even build book data would be partially applicable since such items as MLI, wires, and tie downs were never measured and do not show up on the as-built drawings. However, for the data which is available in the HST metrology book, STIS shows good clearances. In addition, comparison of clearances in the HFMS, while not conclusive, should be indicative of fit into the HST. Comparison of STIS to GHRS in the next section increases confidence in the fit.

TABLE 6-1 STIS ENVELOPE MEASUREMENTS CORRECTED FOR TARGETS 6/28/96

TE A16-0148

	No.	FIG	NAME	P1	P2	P3	REQUIREMENT	DELTA	SECTION
	14	N.A.	A LATCH DIRECT	-0.00138	0.00104	0.00152			
	20	N.A.	C LATCH TOOL	0.7306	21.202	21.202			
	27	N.A.	B LATCH TOOL	-85.7172	-2.3999	-2.3999	P1 = -85.727 +/- 0.036	-0.01	
	36	N.A.	A LATCH SPHERE FIT	0	0	0			
	49	N.A.	B LATCH TARGETS	-85.7032	-2.4113	-2.4329	P1 = -85.727 +/- 0.036	-0.015	
	84	4	OUTBOARD GUIDE BLOCK	0.5723	15.5515	29.3208	P2 = 15.569 + 0, - .03	- 018	
	89	4	OUTBOARD GUIDE BLOCK	0.6515	11.2	29.2178	P1 = 0.645 +/- .005	+.007	6.4.1
NOTE 4	93	4	OUTBOARD GUIDE BLOCK	0.6501	15.1197	29.2383	P1 = 0.645 +/- .005	+.005	
	97	4	OUTBOARD GUIDE BLOCK	0.3894	12.4721	29.7964	P3 = 29.812 +/- 0.005	-0.016	6.4.2
	101	4	INBOARD GUIDE BLOCK	0.6421	-3.7295	29.3879	P1 = 0.645 +/- .005	-.003	
	105	4	INBOARD GUIDE BLOCK	0.6431	1.1518	29.3893	P1 = 0.645 +/- .005	-.002	
	109	4	INBOARD GUIDE BLOCK	0.0684	-5.596	29.4124	P2 = -5.595 +/- 0.005	+.001	
	113	4	INBOARD GUIDE BLOCK	0.0853	-3.1841	29.8105	P3 = 29.812 +/- 0.005	-0.002	
	117	4	INBOARD GUIDE BLOCK	0.0608	0.8185	29.8057	P3 = 29.812 +/- 0.005	-.006	6.4.2
	118	3	GSE LIFT PAD	-2.8081	27.1814	29.0872	P3 = 29.1 +0, -.03	-0.013	
	119	3	PANEL BOLT	-15.9455	20.9886	29.3511	P3 = 29.1 MAX	+0.251	6.4.3
NOTE 1	123	3	PANEL BOLT	-17.8434	20.9832	29.3573	P3 = 29.1 MAX	+0.257	6.4.3
	127	3	PANEL BOLT	-15.9701	-5.21	29.3879	P3 = 29.1 MAX	+0.288	6.4.3
	131	3	PANEL BOLT	-17.0768	-5.1169	29.4273	P3 = 29.1 MAX	+0.327	6.4.3
	135	3	PANEL	-16.2311	-3.9049	29.1657	P3 = 29.1 MAX	+0.066	6.4.3
	139	3	PANEL	-30.4388	-4.5012	29.1525	P3 = 29.1 MAX	+.053	6.4.3
	143	3	PANEL	-23.7351	20.5741	29.1085	P3 = 29.1 MAX	+.009	6.4.3
	147	3	GSE LIFT PAD	-4.4321	-1.2405	29.0804	P3 = 29.1 +0, -.03	-.02	
	151	3	GSE LIFT PAD	-81.866	-1.5063	29.075	P3 = 29.1 +0, -.03	-0.025	
	155	2	-P2 SIDE CORNER	-2.0515	-5.4572	28.5956	P2 = -5.50 MAX	-0.043	
	159	2	-P2 SIDE EPOXY	-2.6342	-5.7362	0.0874	P2 = -5.70 MAX	+0.036	6.4.4
	163	2	-P2 SIDE EPOXY	-2.7713	-5.7421	-3.9042	P2 = -5.70 MAX	+0.042	6.4.4
	167	2	-P2 SIDE EPOXY	-41.0499	-5.7327	0.0659	P2 = -5.70 MAX	+0.033	6.4.4
	171	2	-P2 SIDE EPOXY	-41.0117	-5.7463	-3.879	P2 = -5.70 MAX	+0.046	6.4.4
	175	2	-P3 SIDE EPOXY	-2.7507	-3.794	-5.7518	P3 = -5.70 MAX	+0.052	6.4.5
	178	2	-P3 SIDE EPOXY	-2.6877	0.2757	-5.7262	P3 = -5.70 MAX	+0.026	6.4.5
	183	2	-P3 SIDE EPOXY	-40.8029	0.1037	-5.7474	P3 = -5.70 MAX	+0.047	6.4.5
	187	2	-P3 SIDE EPOXY	-40.8282	-3.8568	-5.7345	P3 = -5.70 MAX	+0.035	6.4.5
	191	2	-P3 SIDE CORNER	-2.028	28.656	-5.4463	P3 = -5.50 MAX	-0.054	
	195	2	-P3 SIDE CORNER	-84.0227	28.5889	-5.4389	P3 = -5.50 MAX	-0.061	
	199	2	-P3 SIDE EPOXY	-83.7115	27.509	-5.493	P3 = -5.50 MAX	-0.007	
	203	2	-P2 SIDE CORNER	-84.2447	-5.4343	28.6629	P2 = -5.50 MAX	-0.066	
	208	2	-P2 SIDE EPOXY	-83.7677	-5.4787	-3.6963	P2 = -5.70 MAX	-0.221	
	212	2	-P3 SIDE EPOXY	-83.771	-3.688	-5.4813	P3 = -5.70 MAX	-0.219	
	216	4	-P1 END BOLT	-86.088	-3.4089	14.0263	P1 = -86.1 -0, +.011	-0.012	6.4.6
NOTE 2	220	4	-P1 END MESA	-86.0663	19.9328	23.4053	P1 = -86.1 -0, +.011	-.034	6.4.6
	224	4	APERTURE SHUTTER HOUSING	0.4311	-5.0177	-4.9423	P1 = 0.4 MAX	+0.031	6.4.7
NOTE 3	228	4	APERTURE SHUTTER HOUSING	0.4114	-4.7235	-1.0594	P1 = 0.4 MAX	+0.011	6.4.7
	232	4	APERTURE SHUTTER HOUSING	0.4014	-0.2111	-5.18	P1 = 0.4 MAX	+0.001	6.4.7
	236	4	+P1 SURFACE	-0.6595	-4.173	1.0387	P1 = 0.4 MAX	-1.06	
	240	4	+P1 SURFACE	-0.6783	27.836	27.7755	P1 = 0.4 MAX	-1.078	
	244	4	GUIDE STRIP	-85.5714	-0.576	-5.7943	P2 = 0.55 +/- 0.01	+0.026	6.4.8
	248	4	GUIDE STRIP	-86.1054	-0.308	-5.6201	P1 = -86.12 +/- 0.01	-0.015	6.4.1
	252	4	GUIDE STRIP	-85.5948	-0.1992	-5.9018	P2 = -5.92 +/- 0.01	-0.018	6.4.2
	256	4	GUIDE STRIP	-85.5796	17.154	-5.9077	P2 = -5.92 +/- 0.01	-0.012	6.4.2
	260	4	GUIDE STRIP	-86.1138	12.2695	-5.6015	P1 = -86.12 +/- 0.01	-0.006	
NOTE 5 XXX			RADIATOR BRACKETS						

* OUT-OF-TOLERANCE DELTA VALUES ARE IN BOXES
* ALL VALUES IN INCHES
* BOXED DIMENSIONS ARE APPLICABLE

NOTES:
1) 3 REDESIGNED CLAMPS INSTALLED FOLLOWING 6/28/96
2) 3 REDESIGNED VENTS WILL BE INSTALLED FOLLOWING 10/11/96
3) EMU SHUTTER REPLACED BY FLIGHT SHUTTER FOLLOWING 6/28/96
4) GUIDE BLOCKS REMOVED AND REINSTALLED FOLLOWING 6/28/96
5) TWO NEW RADIATOR BRACKETS INSTALLED FOLLOWING 6/28/96

A

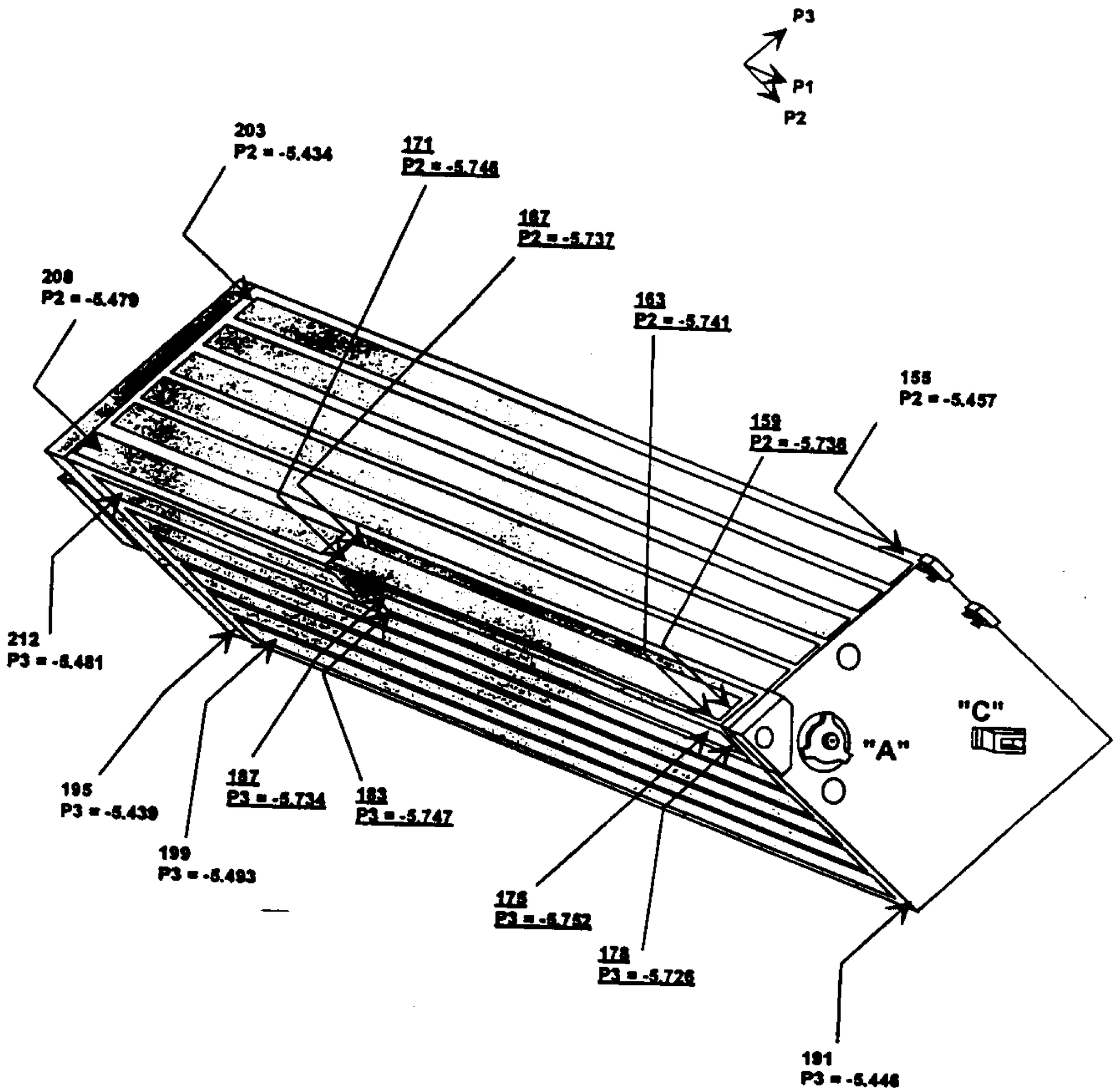

FIGURE 6-2 STIS -P2/-P3 SIDE VIEW

(NEW PAGE CREATED BY IRN 111)
10.7-27

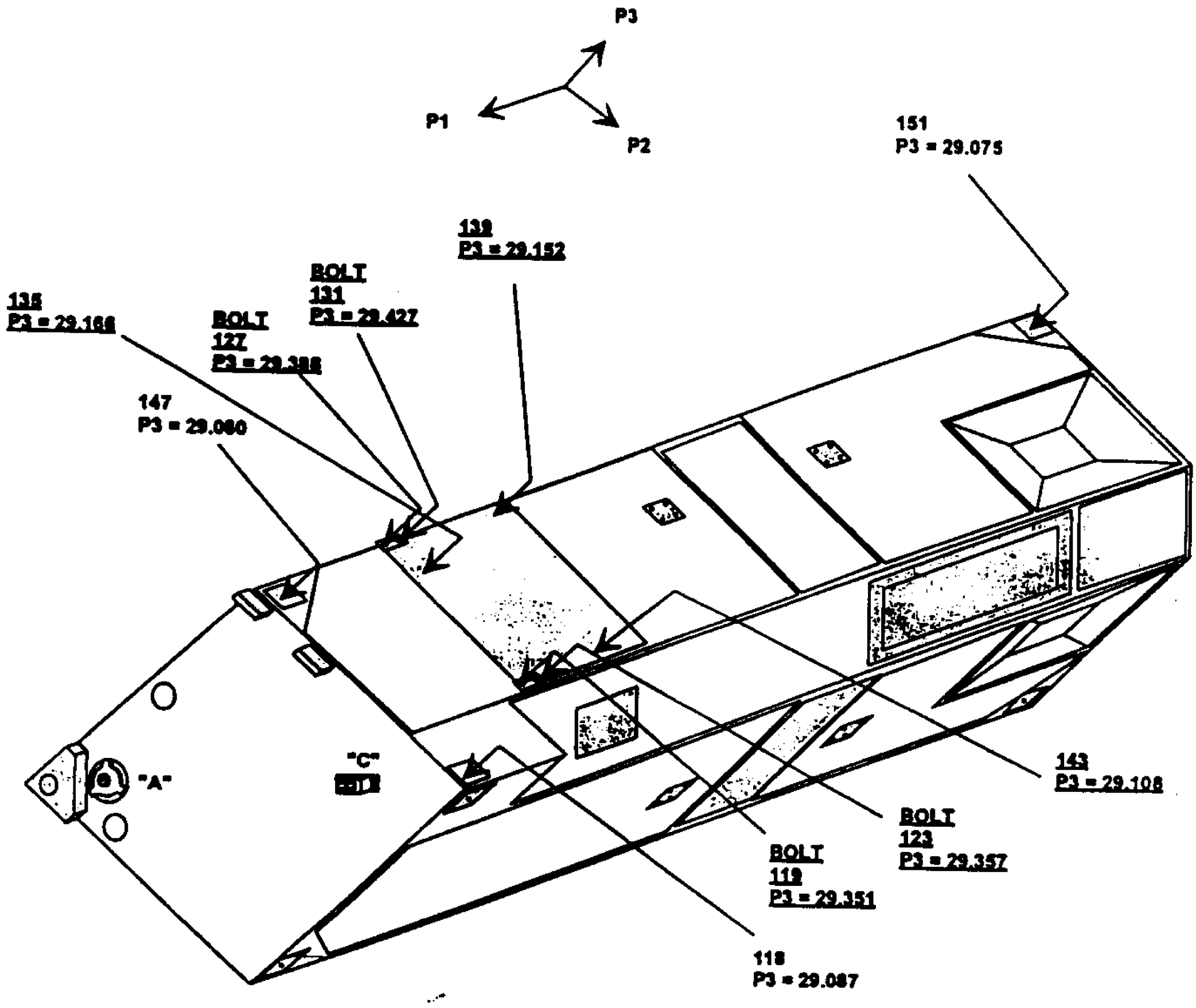

FIGURE 6-3 STIS +P2/+P3 SIDE VIEW

TE A16-0148

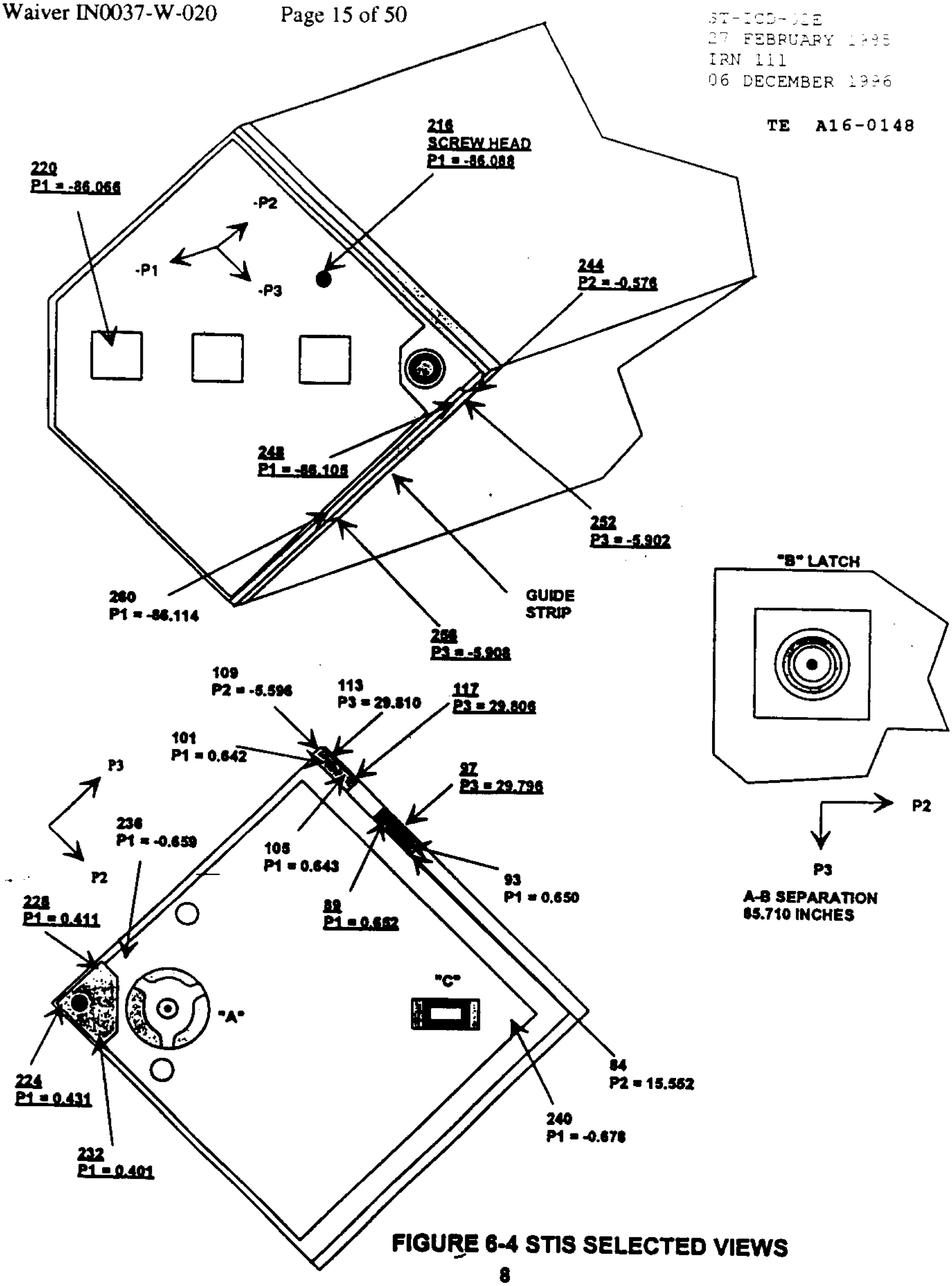

FIGURE 6-4 STIS SELECTED VIEWS

8

REV A

TE A16-0148

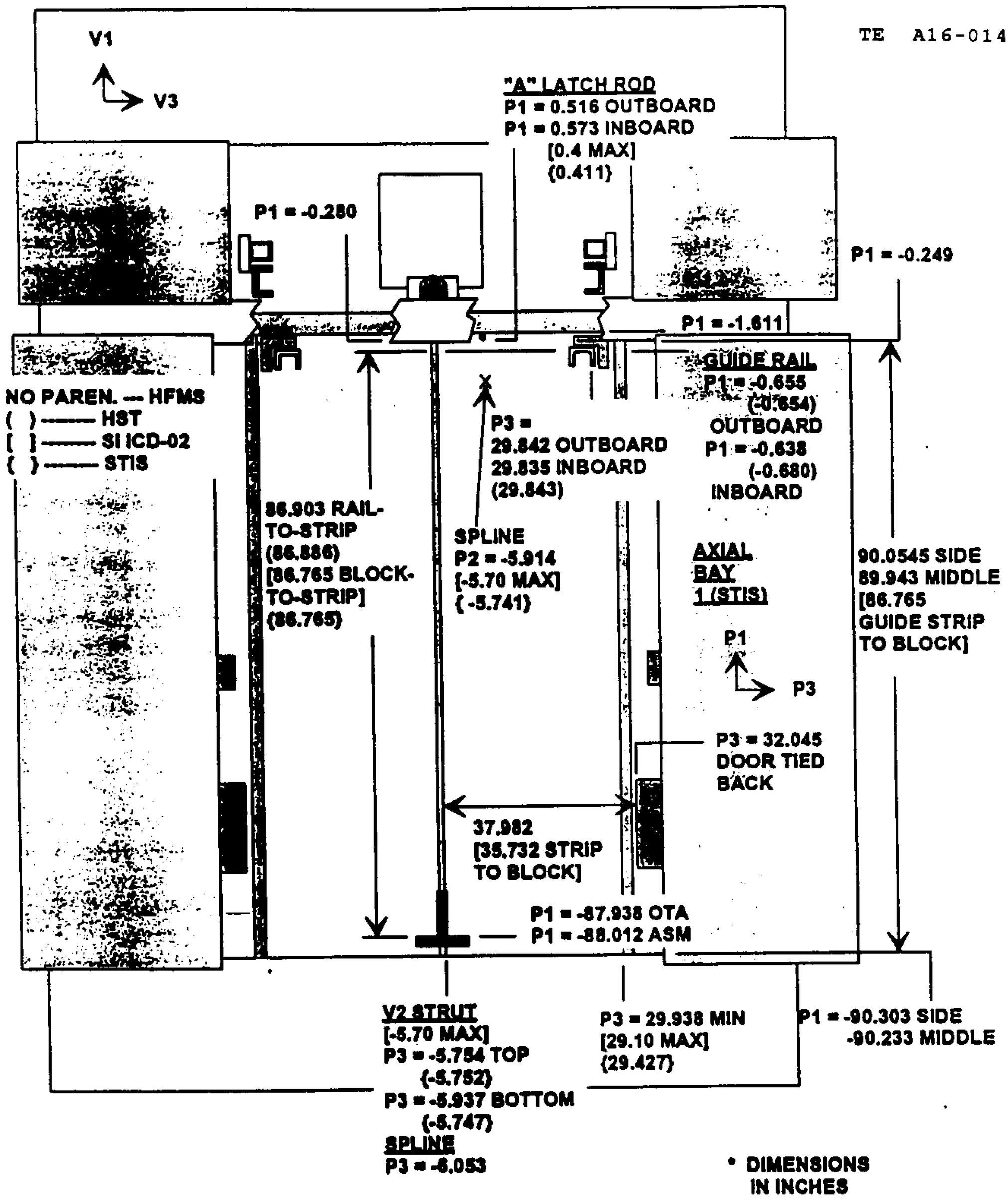

- DIMENSIONS IN INCHES
- 0.012 2σ ABSOLUTE, HFMS
- 0.005 2σ RELATIVE, HFMS
- 0.0052 2σ, ABSOLURE, STIS
- 0.0052 2σ, RELATIVE, STIS

FIGURE 6-5 HST/HFMS/STIS COMPARISON, AXIAL BAY 1

The original set of axial instruments were built against an ICD which allowed the instruments to come too close to the OTA structure. For the first and second servicing missions, the allowed envelope was stepped back from the OTA in critical areas. Therefore, there is much less risk with installing an SI into the HST today. The following discussions provide confidence in the safety of STIS fit into HST:

- "A" latch rod --- Once the instrument is swept into the HST, it is driven in the +P1 direction with the "B" latch until it engages the "A" and "C" latches. The +P1 end of the instrument has no trouble sweeping through the Aft Shroud door and under the OTA peripheral beam. When the instrument is latched, the "A" latch drive rod comes closest to the instrument. The HFMS rod was measured to be P1 = 0.516 inch minimum whereas the corresponding STIS point was P1 = 0.411 inch. Therefore, there is a 0.105 inch gap worst case. The HST drive rod should be close to the HFMS rod, so should have adequate clearance.

- Spline --- The Focal Plane Structure spline area around the focal plane deck hub was a problem with the original set of instruments. Subsequently, the ICD envelope was pulled back from the original envelope by 0.2 inch. The measured HFMS P2 dimension including MLI was -5.914 inches. The ICD allowed SI value is -5.700 max, and the measured STIS value was -5.741. The resultant gap is 0.173 inch to MLI on the HFMS, which should be adequate. In the P3 direction, the measured HFMS value was -6.053 where the STIS value is -5.752. The ICD allowed is the same for P2 and P3. Again, there should be good margin.

- V2 Strut --- The instrument sweeps by the V2 strut as it is installed into the OTA. The worst case measured value for the HFMS was P3 = -5.754 inch. The corresponding STIS value was -5.752 inch. The allowed ICD value is -5.700. The HFMS strut is tilted toward the STIS envelope on its +P1 end such that there is a small gap between the strut and the instrument. The strut dimension was measured on MLI which balloons out such that any contact with an inserted SI will be compressed out of the way. In addition, the instrument is free to move laterally during insertion such that it can increase the gap during insertion. STIS was loaded successfully into the HFMS. The HST strut position is not known, but as will be discussed later, the GHRS instrument is bigger in this dimension, so STIS will have no trouble with insertion.

- V3 Struts --- The instrument sweeps by the V3 struts and braces as it is installed into the OTA. The worst case measured value on the HFMS was P3 = 29.938 inches. The allowed ICD instrument value is

29.10 max, and the measured STIS value was 29.427. Again there is good margin of 0.511 inch. HST should have a similar gap. TE A16-0148

- Guide Block to Strip Length --- The length between the SI guide blocks and strip must be contained within the separation between the OTA guide rails. The minimum OTA rail separation is 86.886 inches whereas the maximum STIS separation is 86.765 inch. Therefore, there is a 0.121 inch gap during insertion into the OTA. Figure 6-6 illustrates the fit into the OTA rails.

- Fit through HST doors --- The measured HFMS door opening was measured to be 89.943 inches worst case. The allowed ICD guide block to guide strip separation, the longest SI dimension, is 86.865 inches. The measured STIS value was 86.765. There should be good margin of approximately 3 inches during insertion through the door.

- Forward Guide Blocks Fit to OTA Rails --- The STIS guide blocks will fit through the slots in the OTA guide rails during latch up. A worst case tolerance stack up analysis is shown in Figure 6-7 along with the measured STIS guide block positions. Two items are critical, 1) block end-to-end fit through the OTA rail slots, and 2) block fit in the OTA rail channel. The first item is illustrated in Figure 6-7. The worst case gap in the passage of the two blocks through the OTA rail slots is 0.027 inch. The estimated 2σ measurement error of the STIS blocks is 0.0052 inch, so there is a positive gap after accounting for uncertainty. The second item is illustrated in Figure 6-8. The two guide blocks must be coplanar in the P1/P3 plane to fit in the OTA guide rail channel. The coplanarity was measured to be 0.014 inch whereas a worst case stack up of tolerances allows a 0.056 inch value. Therefore, there is good margin.

6.3 COMPARISON TO GHRS

The GHRS which will be replaced by STIS, currently is residing in HST axial bay 1. Figure 6-9 compares the STIS and GHRS envelopes and shows the differences in the dimensions. A negative delta indicates that STIS is larger than GHRS. The GHRS envelope is contained in the HST metrology book.

GHRS is larger than STIS in all critical dimensions which provides high confidence in the STIS fit into the OTA. The two areas where STIS is larger than GHRS is the overall instrument length and the guide block-to-guide strip side-to-side separation. STIS is smaller than GHRS at the +P1 surface which is the area of greatest congestion. Since it is smaller, there should be no problem with fit around the +P1 end. The STIS increased length is at the -P1 end which is less critical during insertion and latch up.

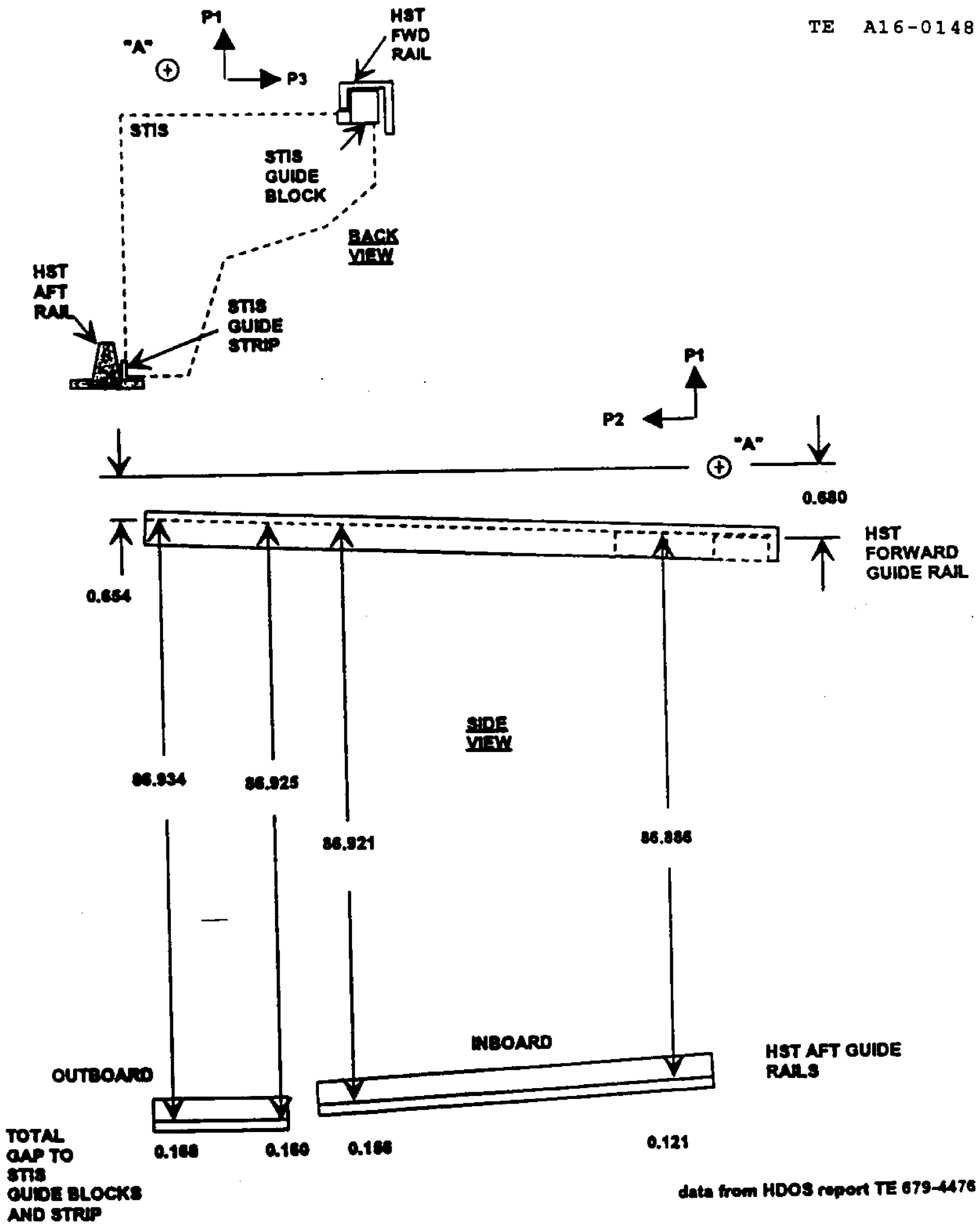

FIGURE 6-6 HST AXIAL BAY 1 GUIDE RAIL ALIGNMENT

12
REV A

(NEW PAGE CREATED BY IRN 111)

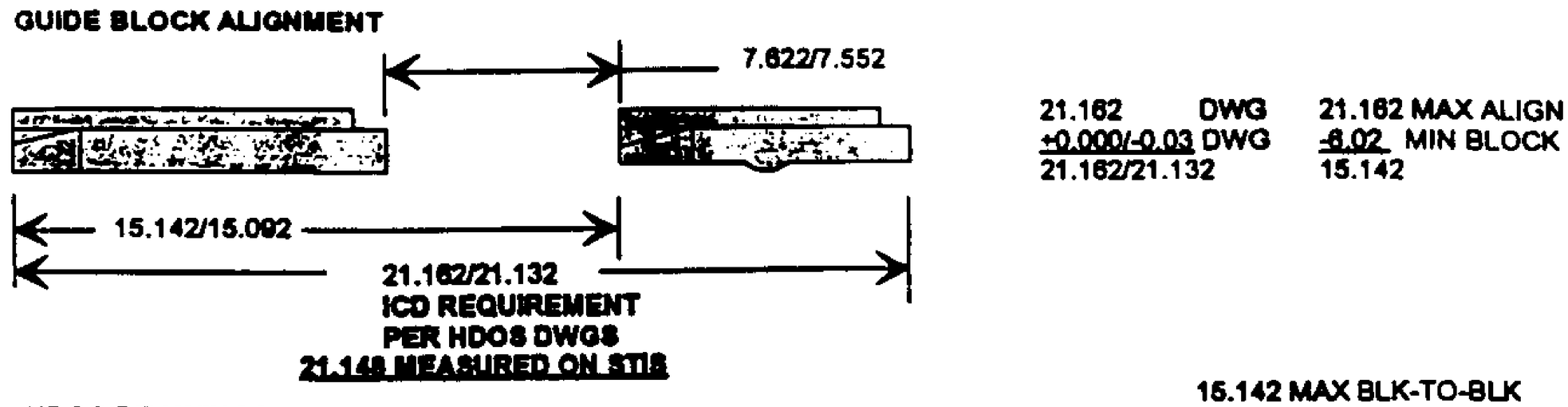

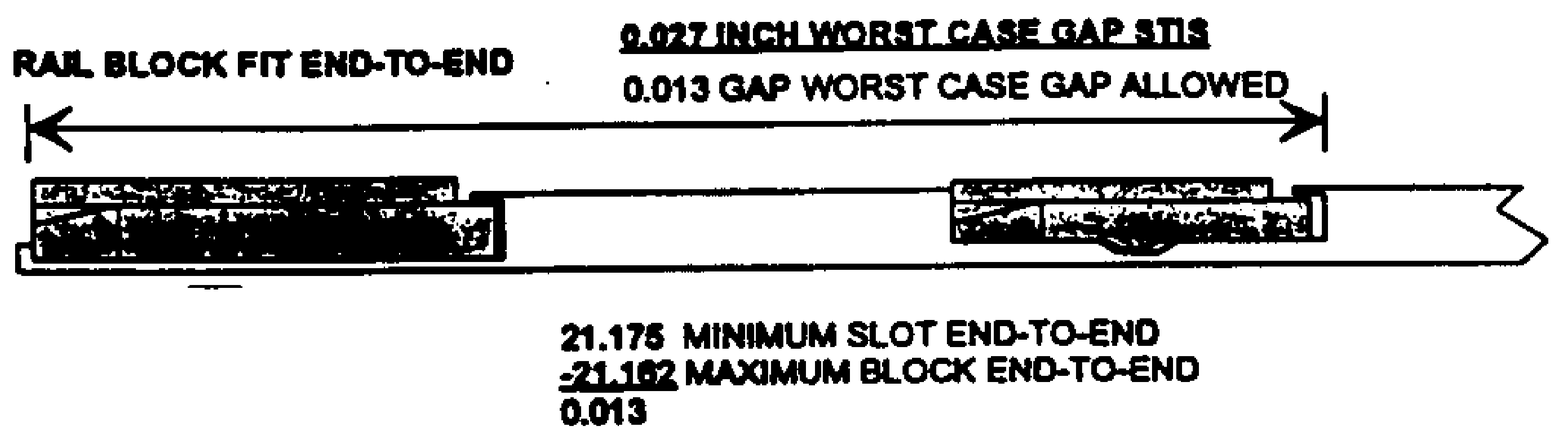

FIGURE 6-7 STIS GUIDE BLOCK INTERFACE WITH OTA RAIL

STS-101-UE
27 FEBRUARY 1998
IRN 111
06 DECEMBER 1996

TE A16-0148

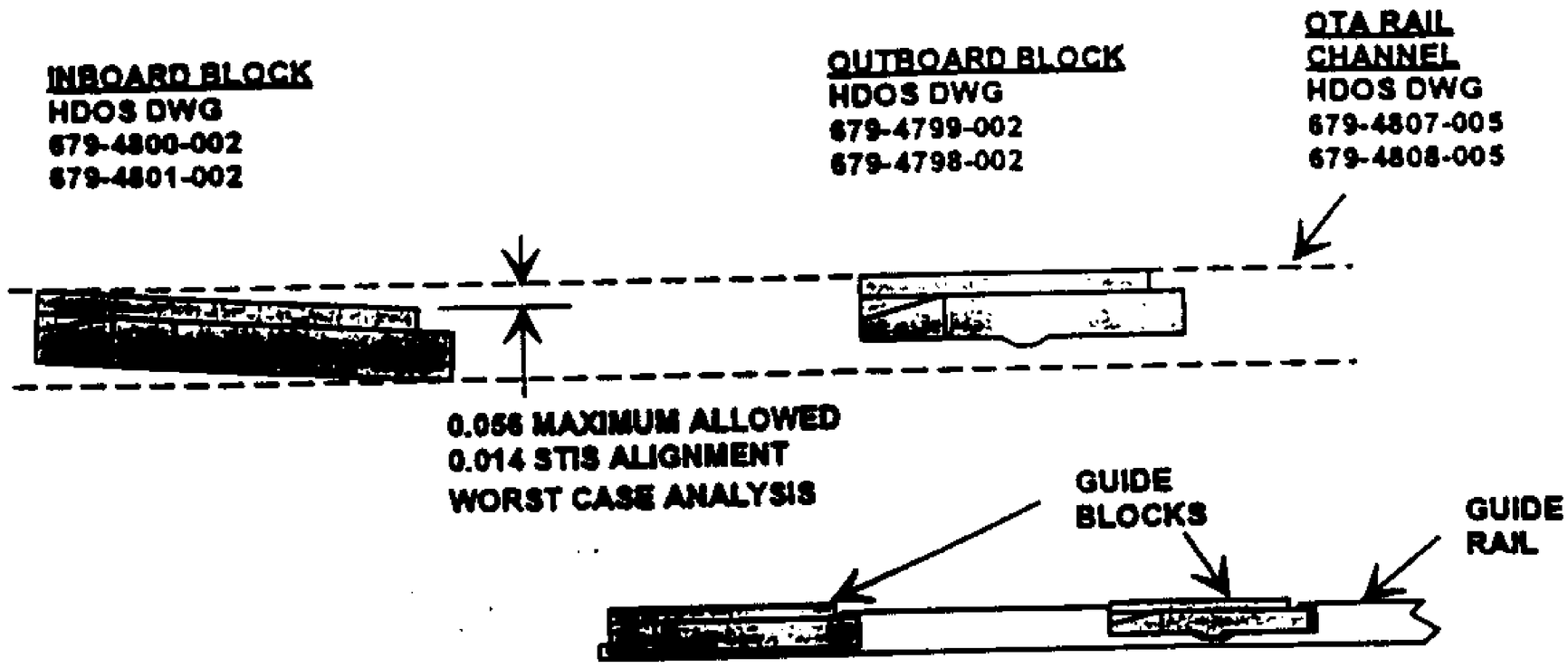

FIGURE 6-8 RAIL/BLOCK FIT WITH NON-PARALLEL GUIDE BLOCKS

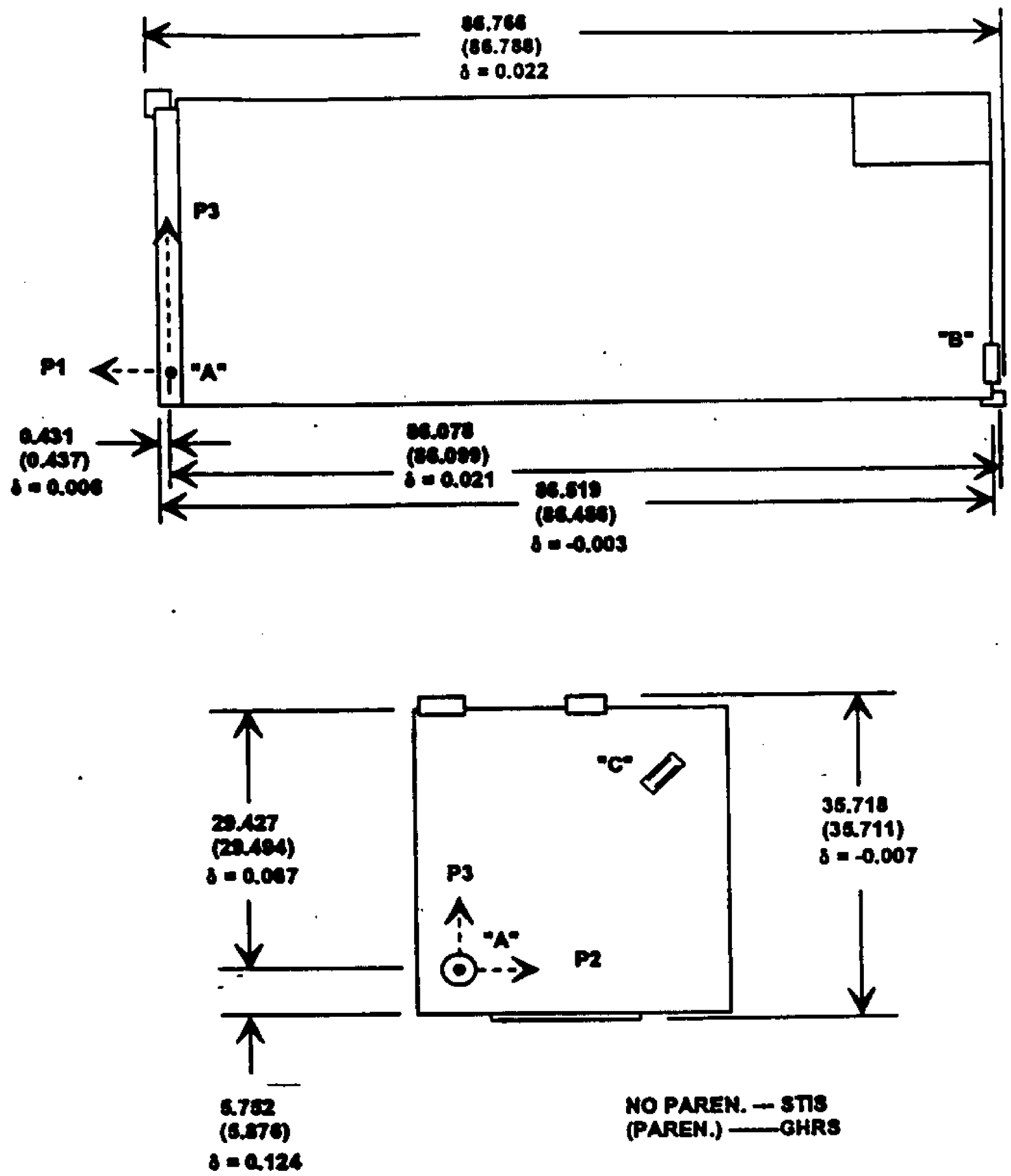

FIGURE 6-9 COMPARISON OF STIS AND GHRS DIMENSIONS (SEE SMR-1092, FIGURE 3.2-20)

The increased guide block-to-guide strip separation in P3 of 35.718 inches is compared to the OTA guide rail separation of 35.914 inches. There is a 0.196 gap which will be sufficient for installation.

It should be noted that the features which define the maximum dimensions of the instruments may not lie at the same lateral coordinates on the metrology plane on the two instruments. Therefore, comparison of maximum dimensions could produce false confidence in the fit into the OTA.

6.4 OUT-OF-TOLERANCE ITEMS

Table 6-1 lists several items which exceed the ICD-02 allowed tolerances. This section discusses each out-of-tolerance item and demonstrates acceptability for use in HST.

6.4.1 OUTBOARD GUIDE BLOCK AND GUIDE STRIP P1

The outboard forward guide block is 0.002 inch out of tolerance in the +P1 direction as per AIMS data point 89. The estimated 2σ uncertainty for the measurements is 0.005 inch, so the out of tolerance measurement is well within the uncertainty. Similarly, the guide strip data point 248 is too short by 0.005 inch which equals the 2σ tolerance. Therefore, this measurement is acceptable.

DUPLICATE PARAGRAPH DELETED, REV A.

A

6.4.2 GUIDE BLOCK AND STRIP P3

The guide blocks were not adjustable in the P3 directions, so were accepted as-assembled during guide block alignment. Data point 97 on the outboard guide block and data point 117 on the inboard block are out of tolerance. Data point 117 in only 0.001 inch out which is well within the 0.005 inch measurement uncertainty. Data point 97 is 0.016 inch short of nominal against an allowed tolerance of 0.005 inch. This alignment must be considered along with the guide strip alignment.

Data points 252 and 256 on the guide strip shows that the strip is aligned short by 0.008 inch at the inboard end and 0.002 inch at the outboard end. The critical aspect of strip-to-block lateral alignment is the gap

between the instrument block/strip and the OTA guide rails during insertion. Since the out-of-tolerance points are all aligned short of the requirements, in-tolerance alignments define the side-to-side dimension of 35.718 inches. The OTA corresponding rail minimum separation is 35.914 inches such that there is a 0.196 gap for installation. This gap will be sufficient for a nominal installation operation. TE A16-0148

6.4.3 P3 PANEL BOLTS

The radiator panel on the P3 instrument side and bolts attached to the panel all are out-of-tolerance. The specific AIMS data points are 119, 123, 127, 131, 135, 139, and 143. The requirement is P3 = 29.1 maximum, whereas the maximum measured dimension was 29.427 inches which is 0.327 inch larger. This panel will sweep past the +V3 strut and cross braces on the OTA during insertion. MLI on the OTA along with heater wires and tie-downs will define the maximum gap to instrument. The OTA dimensions are not known but should be similar to the HFMS dimensions. The HFMS was measured to be 29.938 inches minimum which was defined by ballooning MLI. The corresponding gap to the instrument is 0.511 inch. The GHRS was 0.067 larger than STIS, so there should be no problem with installation in this area.

6.4.4 -P2 SIDE BONDING BEADS

The -P2 instrument side is covered with strips of shiny material which are held in place by beads of bonding material. Four of the beads, out of many, were measured and found to be out-of-tolerance. Refer to AIMS targets 159, 163, 167, and 171. The largest deviation from nominal was 0.046 inch with a measured dimension of 5.746 inches. This instrument side is the leading side which sweeps into the OTA during installation. As such, it only is of concern during and after latch up. The GHRS dimension in this direction is not listed in the HST metrology book, so no comparison can be made. However, the +P3 dimension which is listed in the metrology book is 0.124 inch larger than the STIS dimension, so would show a good margin of safety if it also applies to the P2 side. The GHRS dimension of 5.876 inches is 0.024 inch smaller than the original ICD-02 allowed value of 5.900. Therefore, the instrument should fit into the OTA with no trouble. The measured HFMS dimension which is applicable was P2 = -5.914 inches. This produces a 0.168 inch gap to the instrument. The OTA gap should be similar to the HFMS gap.

6.4.5 -P3 SIDE BONDING BEADS

Similar to the -P2 side, the -P3 side also has bonding beads holding on shiny tape. AIMS data points 175, 178, 183, and 187 represent the points which were measured. Target 175 has the largest P3 dimension of -5.752 inches. The GHRS had a dimension of -5.876 inches, so STIS is smaller

by 0.124 inch. In addition, STIS is 0.148 inch smaller than the original ICD-02 requirement. Therefore there is good confidence that these bonding beads will be acceptable for installation into the OTA. TE A16-0148

6.4.6 -P1 END

Targets 216 and 220 represent a number of bolt heads and 3 mesas (purpose not know). Since the values are less than the ICD, there will be no interference during installation and latch up. The ICD should be changed to reflect a maximum value only.

6.4.7 APERTURE SHUTTER HOUSING

Targets 224, 228, and 232 represent the 3 corners of the shutter housing on the +P1 surface. The -P2/-P3 corner extends farthest exceeding the ICD allowed value by 0.043 inch. The STIS P1 coordinate was P1 = 0.431 inch whereas the GHRS coordinate was P1 = 0.437 inch. This 0.006 inch difference may just be measurement error. But more important, the features which define the maximum dimensions of the instruments may not lie at the same P2/P3 coordinates on the two instruments. Therefore, comparison of maximum dimensions could produce false confidence in the fit into the OTA.

The +P1 instrument surface is well away from any HST surfaces during insertion in the guide rails. Once the "B" ready light is illuminated and the instrument is inserted into the "A" latch, the nearest OTA feature to the aperture cover is the "A" latch rod. The shutter may not actually extend under the rod, but if it does, the location of the OTA rod is not known, but the HFMS rod was measured to be located at P1 = 0.516 inch. The STIS feature which could be under the rod is represented by target 228 which is located at P1 = 0.411 inch. The corresponding gap is 0.105 inch.

The sharpness of the -P2/-P3 corner of the shutter housing is of concern. As STIS is inserted into the OTA, if there is any ballooning MLI along -P3 side of the instrument, the sharp corner could hang up and tear the material and potentially prevent further installation. Consideration should be given to rounding this corner.

6.4.8 GUIDE STRIP P2

The aft guide strip is aligned too close by 0.026 inch to the insertion leading edge of the instrument in the -P2 direction as shown with AIMS data point 244. As shown in Figure 6-10, the STIS guide strip and OTA guide rail operate by sliding a 90 degree corner strip down a corner which is somewhat larger than 90 degrees during insertion into the OTA. Once the instrument is fully inserted into the OTA, it is translated in the P1 direction, away from the OTA half rail, for latch up in the "A" latch. This

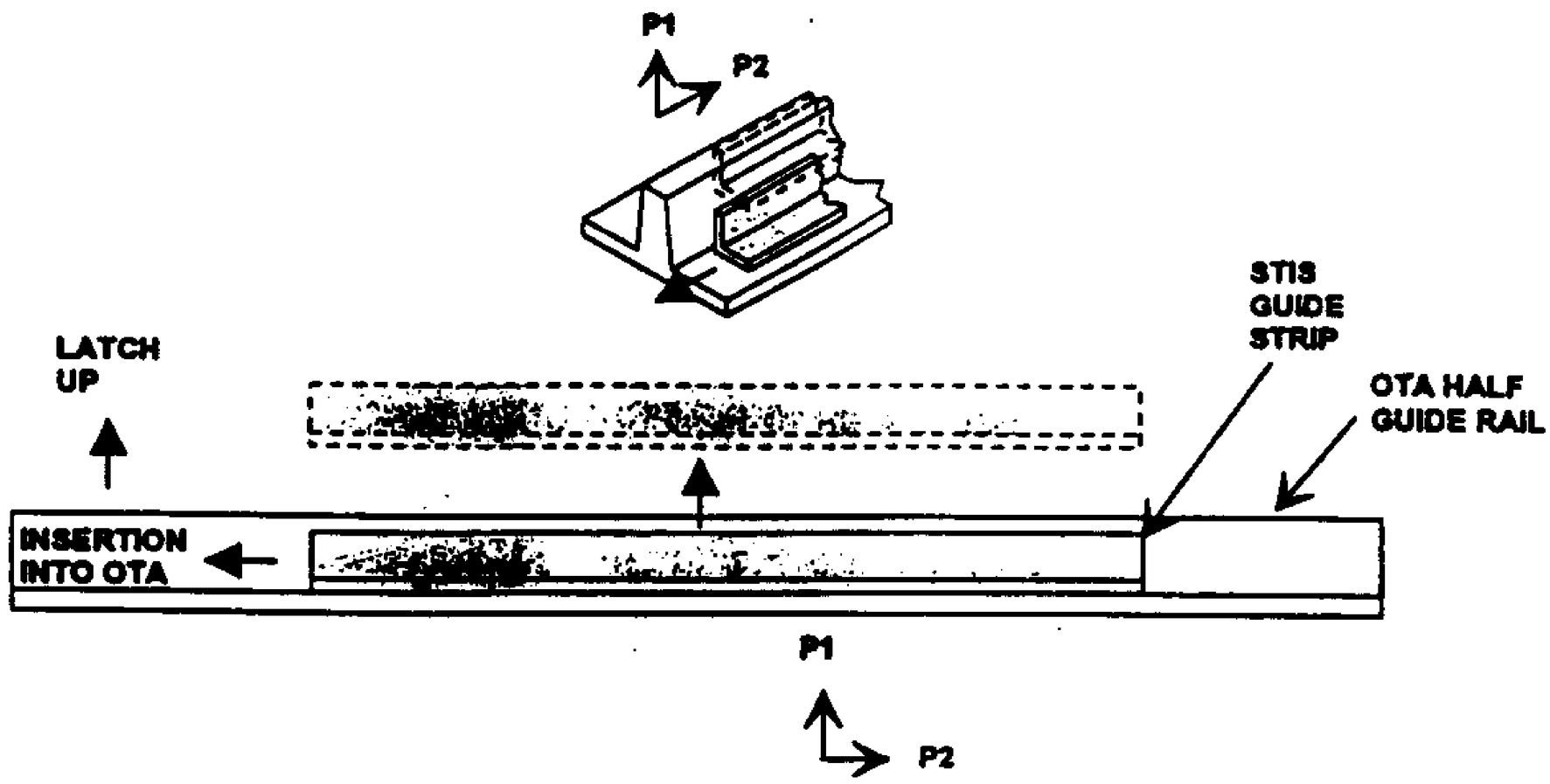

FIGURE 6-10 GUIDE STRIP/RAIL OPERATION

ST-002-1E
27 FEBRUARY 1996
IRN 111
06 DECEMBER 1996

moves the STIS strip away from the OTA rail. There is no structure in the vicinity of the rail and strip at the point of translation into the "A" latch, so that a 0.026 inch out-of-tolerance condition can have no effect of STIS installation. Therefore, this alignment is acceptable. TE A16-0148

6.5 "B" LATCH PLACEMENT

Separation between the "A" latch and the "B" latch in the P1 direction is critical for maintaining "B" latch preload under extremes of environmental conditions. The nominal separation requirement from ICD-02 is 85.727 +/- 0.036. This separation was measured in two ways and found to agree within 0.014 inches. The latch coordinate system was defined using the latch tools one of which was in the "B" latch. The latch separation using this tool is 85.7257 - 0.0085 = 85.7172 as shown in AIMS data point 27 in Appendix A. See Section 7.1 for discussion of the latch tools and the 0.0085 inch tool error.

The second method of latch placement determination used K&E stick on targets on 4 quadrants of the "B" latch spherical bearing as metrology references. The spherical bearing end is located to within 0.001 inch of the sphere center per drawing. Averaging the P1 dimensions of the four targets cancels out the tilt of the bearing. The average measured value of 86.0867 inches, as represented by target 49, was adjusted by subtracting 0.0085 inch for the target thickness' and 0.375 inch for the latch surface displacement from the sphere center. The result was a latch placement of 85.7032 inches.

The estimated uncertainty of the latch tool seating is 0.014 inch, and the estimated uncertainties in the measurements are 0.005 inch each. The rss uncertainty is 0.016 inch 2σ . So the two measurements agree within the estimated error, and both measurements lie within the allocated tolerance. Therefore, the "B" latch location is acceptable.

7. DATA ANALYSIS

Measurements were made using AIMS to capture the data. Three types of targets were used to provide precise metrology references for pointing the theodolites. 1) Special targets and tools were used for the latch tools as described in Appendix C and Section 7-1. 2) K&E stick-on targets were attached to Kapton tape (combined thickness of 0.0085 inch) for easy placement and removal. 3) A 0.500 inch diameter tooling ball on a shaft could be positioned against desired measurement surfaces.

The AIMS measurement approach is a digital sampling of features on a test article. Measurements were made first by surveying STIS for critical features which were defined by Interface Control Document requirements or by known areas of tight fit into the HST. Once a measurement point

was selected, either a stick on target was attached to the feature or the tooling ball was held against the feature. The tooling ball was the preferred target since it inherently yields higher measurement accuracy. Each target was measured using as many theodolites as could view it. In addition in most cases, a minimum of 3 and sometimes 5 measurements were made to improve the measurement precision. TE A16-0148

The data were reduced first by placing all data in the P-coordinate system, second by identifying which degree of freedom is applicable with respect to a given requirement, and third by removing the target thickness from the data.

7.1 LATCH TOOLS

The alignment tools which were used to define the positions of the "B" and "C" latches were designed by Swales & Associates and are documented in drawings SC 1600052 through 1600054 as contained in Appendix C. During the AIMS COSTAR measurements using the alignment tools, they were inspected and measured by Paramax to determine deviations between the designed and measured dimensions of the tools. The results of the Paramax measurements are contained in Appendix C and summarized in Figure 7-1.

Measurements were made to determine the concentricity of the bore through the center of the "C" latch tool, the uniformity in its cylindrical diameter, and the dimensions from the center of the precision checking ball inserted in the bore of the tool to the base of the tool. This tool has

less than 0.0005 inch error in the lateral direction, which is the only direction which is critical.

The "B" latch tool consists of two parts shown in the figure. A Delrin insert secures a 0.500, inch checking ball to the tool as it threads into the body of the tool. The concentricity of the bore through the center of the "B:" latch tool was measured to determine the centration of the ball to the conical surface. Since the peak run out was 0.0018 inch, the concentricity is 0.0009 inch which is the error the ball will produce with respect the center of the "B" latch. The depth of the checking ball was measured with respect to the tool's outer end. The outer surface of the truncated cone of the tool seats in a similarly shaped conical bore in the rotating spherical bearing of the "B" latch. Installation of the tool into the "B" latch is shown in Figure 7-2. The rotating conical bore of the "B": latch on the STIS side is used to help align the male end of the "B" latch when latching into the SI. When seated in the latch, the center of the checking ball is located 0.0085 inch from the center of the "B" latch in the -P1 direction. A tolerance analysis of the potential seating error of the tool in the latch was performed using the latch drawings and the tool measured values. This

"B" LATCH TOOL

TE A16-0148

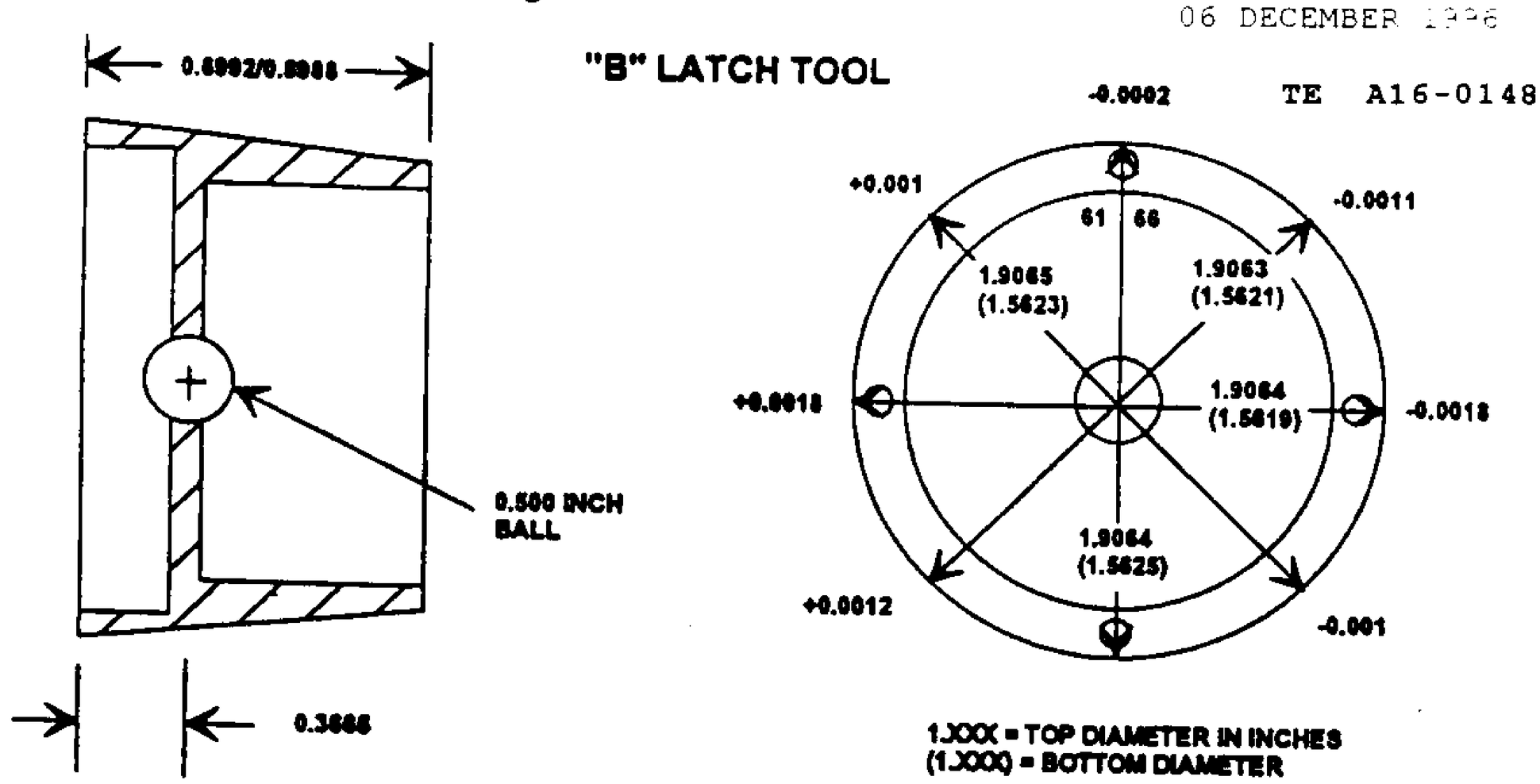

"C" LATCH TOOL

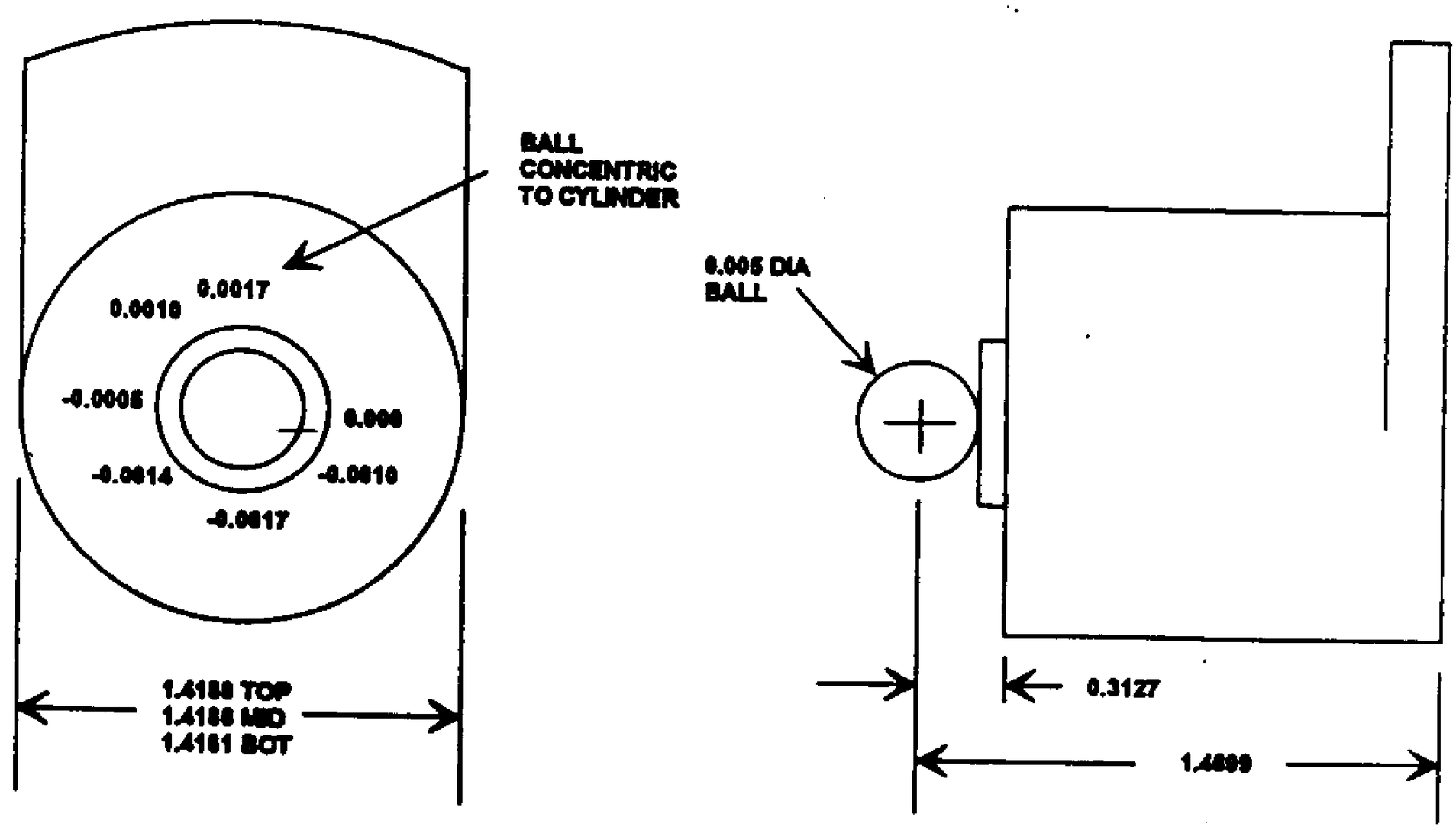

FIGURE 7-1 LATCH TOOL CALIBRATION SUMMARY

TE A16-0148

"C" LATCH

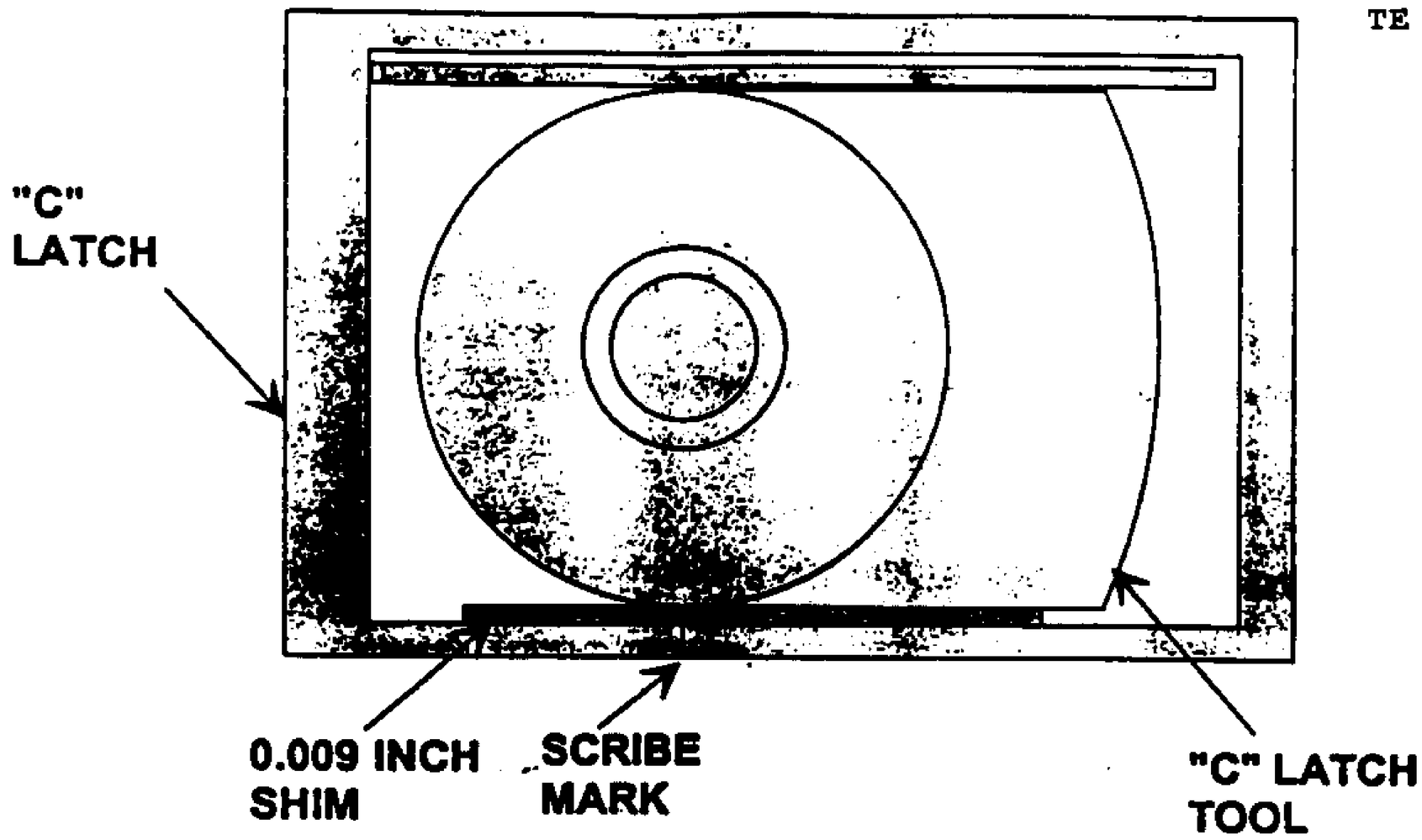

"B" LATCH

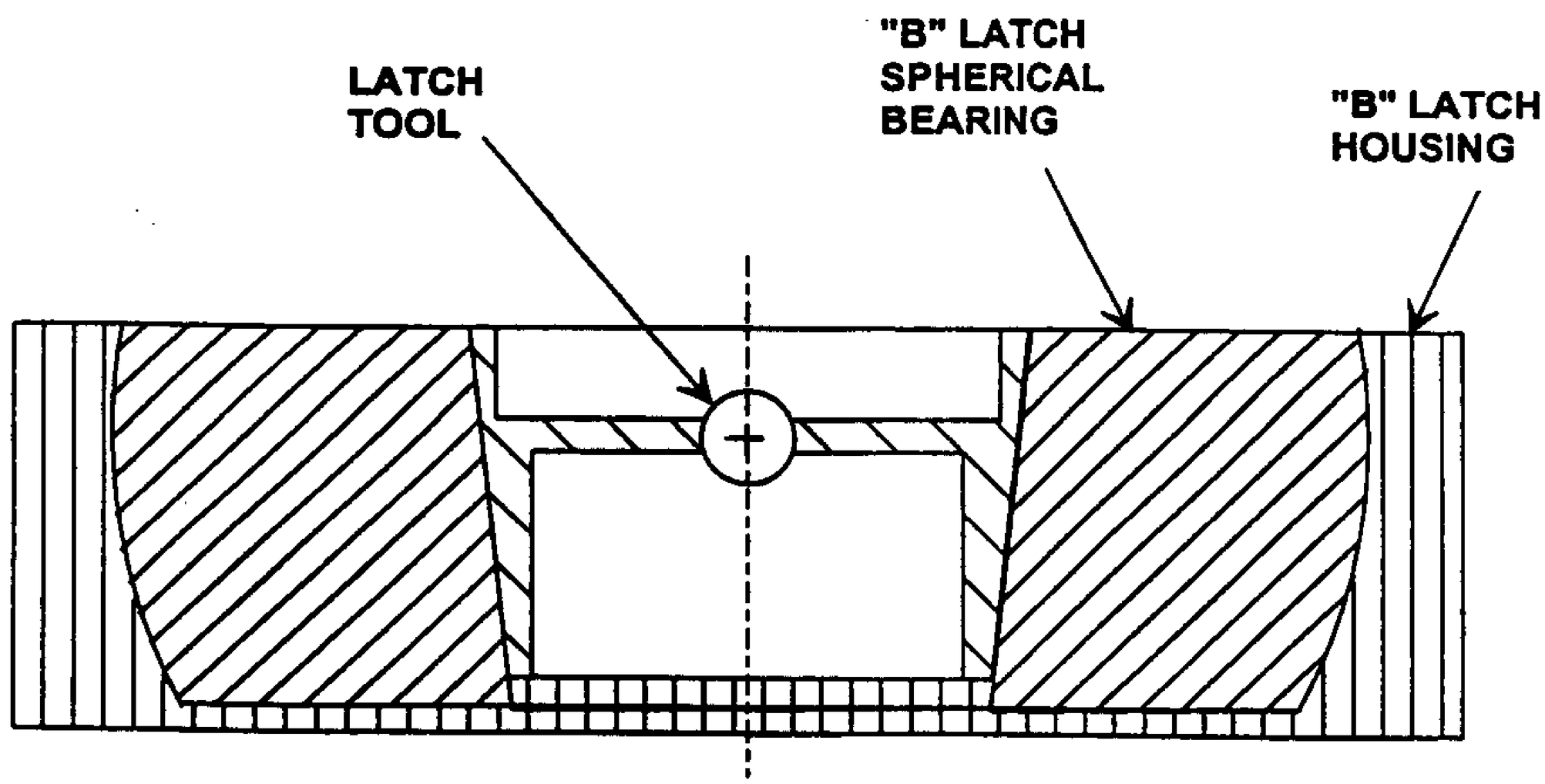

FIGURE 7-2 LATCH TOOL INSTALLATION

(NEW PAGE CREATED BY IRN 111)

analysis is contained in Appendix D. The correction factor of 0.0085 inch can vary by +/- 0.014 inch due to the stack up of tolerances.

The "C" latch tool, shown in Figure 7-2, fits into the well of the "C" latch. A precision checking ball inserted into the center hole of the tool provides the AIMS target. The tool, when inserted in the latch well is placed such that the center of the ball is bisected by a scribe line defining the center of the "C" latch. The radius of the cylinder is 0.009 inch less than the flight "C" latch radius, so a 0.009 inch shim was placed between the tool and the latch on the -P2 side of the tool to center it on the latch.

7.2 ERROR ANALYSIS

Several error sources contribute to the total error in determining any STIS dimension in latch coordinates. The error sources and estimated values are determined as follows:

- Target Thickness --- Measurements of specific locations on the STIS were made using either K&E stick on targets or precision tooling balls as targets for the theodolites. The thickness' of these targets were removed from the data to provide the reported measured values. The precision tooling ball diameters all check to better than 0.0001 inch using micrometers. The K&E targets always were attached to Kapton tape before placing on the STIS. The target/tape combinations were checked with a micrometer and always read 0.0085 inch thick. The error in making these measurements and the variability in thickness' between targets is estimated as less than 0.0002 inch. Therefore, a 1σ error of 0.0002 inch is assigned to this error source.

- AIMS Measurements --- Most critical measurements with AIMS are made with more than 2 theodolites viewing the target. AIMS needs only two theodolites to calculate a position, so larger numbers of theodolite sightings are used to improve the target location by averaging. Experience has shown that the rms repeatability of a set of targets can be as good as 0.001 inch. In addition, 3 to 5 measurements each are made on most targets and the results averaged. The peak spread in these measurements is usually less than 0.001 inch. Therefore, the 1σ error is conservatively estimated as 0.002 inch.

- Latch Tools --- The two latch tools were calibrated by Paramax for the COSTAR verification effort. See Appendix C for the data sheets. The targets are true to the latch metrology points to better than 0.001 inch, so a conservative 0.002 inch 1σ value is assigned to accommodate assembly errors.

These error sources combine to provide a total absolute error as shown in Table 7-1. the 1σ error is 0.0028 inch absolute with respect to latch coordinates. The estimate relative errors between any two targets is the rss of two individual AIMS measurements, or 0.0028 inch.

TABLE 7-1 MEASUREMENT ERROR ANALYSIS

ERROR	ITEM
0.0002	TARGET THICKNESS
0.002	LATCH TOOL ERRORS
0.002	STIS AIMS MEASUREMENTS
0.0028	RSS ERROR

7.3 ACKNOWLEDGMENTS

Special thanks go to Carlos Aviado and Dean Osgood for long hours making the AIMS measurements.

8.0 ENVELOPE REMEASUREMENTS, 10/11/96

When STIS was returned to BASD following the 6/28/96 measurements, several changes were made to the configuration, and several items were temporarily removed. The envelope and guide block locations were remeasured using the AIMS system once it was delivered to GSFC for the second time. This section discusses the results of the latest measurements. The AIMS raw data are contained in Appendix E, and the as-run data sheets are in Appendix F.

8.1 SUMMARY AND CONCLUSIONS

The remeasured STIS instrument configuration has been updated but still does not represent the final configuration. The following list summarizes the changes:

- Three redesigned vents will be added to the -P1 surface at some future date. Both AIMS and depth micrometer measurements were made on the old vents to simplify envelope verification once the new ones are installed.

- Two new radiator brackets have been added to the -P1 surface to accommodate two radiators which will be installed on orbit either during this servicing mission or the next mission. The -P3 bracket was non-flight since its latest modification was not available at the time of the measurements. Both AIMS and depth micrometer measurements were made to simplify envelope verification once it is installed.

- The guide blocks have been removed and reinstalled. Remeasurements of their positions confirm repeatability except in the P1 direction for the inboard block.

- The radiator clamps for the +P3 radiator was replaced by newly designed clamps which show a lower profile.

- The +P3 and +P2 radiators were removed and reinstalled.

- Panels on the -P2 and -P3 sides of the instrument were removed to provide access to the instrument's interior. These were reinstalled and remeasured.

- A flight aperture shutter replaced the EMU shutter which was measured previously.

- A panel on the -P1 side was removed and reinstalled, but it was not measured since it clearly was well inside the envelope compared to nearby structure.

TE A16-0148

TABLE 8-1 STIS ENVELOPE REMEASUREMENTS, 10/11/96

CORRECTED FOR TARGETS

No.	NAME	FIG.	P1	P2	P3	RQMT	DELTA	STATUS	(6/28/96) DELTA	(6/28/96) TARGET	SECTION
18A	B LATCH (TOOL)	8-3	-85.708	-2.4	-2.4	85.727 +/- 0.036	-0.0185				8.8
24A	C LATCH	8-3	0.7569	21.1847	21.1847	N.A.					8.8
35A	A LATCH (SPHERE FIT)	8-3	0	0	0	N.A.					8.8
39A	A LATCH (FLAT FACE)	8-3	0	0.1896	-0.2847	N.A.					8.8
43A	A LATCH (FLAT FACE)	8-3	-0.0006	-0.3034	0.3421	N.A.					8.8
44A	SHUTTER P1	8-2	0.4036	-0.1745	-5.2197	0.4 MAX	-0.0036	NEW			8.2
45A	SHUTTER P1	8-2	0.4326	-4.5703	-5.1632	0.4 MAX	-0.0326	NEW			8.2
46A	SHUTTER P1	8-2	0.4098	-4.9458	-0.3349	0.4 MAX	-0.0098	NEW			8.2
47A	SHUTTER -P3 SIDE	8-1	0.217	-0.2399	-5.4341	-5.70 MAX	0.2659	NEW			8.2
48A	SHUTTER -P3 SIDE	8-1	0.0375	-4.4664	-5.4398	-5.70 MAX	0.2602	NEW			8.2
49A	SHUTTER -P2 SIDE	8-1	-0.0509	-5.4317	-4.3345	-5.70 MAX	0.2683	NEW			8.2
50A	SHUTTER -P2 SIDE	8-1	-0.0256	-5.4359	-0.296	-5.70 MAX	0.2641	NEW			8.2
51A	INBOARD GUIDE BLOCK	8-1	-0.0684	-5.5971	29.3863	-5.595 +/- 0.005	0.0021	MOVED	0.001	109	8.5
52A	INBOARD GUIDE BLOCK	8-2	0.6393	-3.8391	29.3178	0.645 +/- 0.005	-0.0057	MOVED	-0.003	101	8.5
53A	INBOARD GUIDE BLOCK	8-2	0.6218	1.1058	29.2557	0.645 +/- 0.005	-0.0232	MOVED	-0.002	105	8.5
54A	INBOARD GUIDE BLOCK	8-2	-0.1307	-4.5027	29.807	29.812 +/- 0.005	-0.005	MOVED	-0.002	113	8.5
55A	INBOARD GUIDE BLOCK	8-2	0.2031	1.0708	29.8057	29.812 +/- 0.005	-0.0063	MOVED	-0.006	117	8.5
56A	INBOARD GUIDE BLOCK	8-1	0.5662	1.9245	29.4378	N.A.		MOVED			8.5
57A	OUTBOARD GUIDE BLOCK	8-1	0.0906	9.5283	29.4205	N.A.		MOVED			8.5
58A	OUTBOARD GUIDE BLOCK	8-2	0.6503	11.43	29.3747	0.645 +/- 0.005	0.0053	MOVED	0.007	89	8.5
59A	OUTBOARD GUIDE BLOCK	8-2	0.6451	14.8337	29.2791	0.645 +/- 0.005	0.0001	MOVED	0.005	93	8.5
60A	OUTBOARD GUIDE BLOCK	8-2	0.3663	12.5731	29.7984	29.812 +/- 0.005	-0.0136	MOVED	-0.016	97	8.5
61A	OUTBOARD GUIDE BLOCK	8-1	0.5836	15.5478	29.268	15.588 +0, -0.3	-0.0202	MOVED	-0.018	84	8.5
62A	+P3 RADIATOR CLAMP	8-2	-16.737	20.792	29.2351	29.1 MAX	0.1351	NEW			8.3
63A	+P3 RADIATOR	8-2	-30.442	20.4753	29.0846	29.1 MAX	-0.0154	MOVED			8.3
64A	+P3 RADIATOR CLAMP	8-2	-16.715	-4.9863	29.2731	29.1 MAX	0.1731	NEW			8.3
65A	+P3 RADIATOR CLAMP	8-1	-16.517	-5.4627	29.1318	-5.50 MAX	0.0373	NEW			8.3
66A	+P3 RADIATOR	8-2	-29.39	-4.5987	29.1524	29.1 MAX	0.0524	MOVED			8.3
67A	-P2 EPOXY BEAD	8-1	-2.7087	-5.502	17.0733	-5.50 MAX	-0.002	MOVED			8.3
68A	-P2 EPOXY BEAD	8-1	-52.553	-5.5716	17.1514	-5.50 MAX	-0.0716	MOVED			8.3
69A	-P2 EPOXY BEAD	8-1	-83.774	-5.5054	17.0196	-5.50 MAX	-0.0054	MOVED			8.3
70A	B LATCH RESEAT TOOL	8-3	-85.709	-2.4007	-2.4004	-85.727 +/- 0.036	0.0179				8.8
83A	B LATCH (K&E TARGETS)	8-3	-85.697	-2.383	-2.4015	-85.727 +/- 0.036	0.0302				8.8
84A	-P2 EPOXY BEAD	8-1	-2.8172	-5.733	-3.9337	-5.70 MAX	-0.033	MOVED			8.3
85A	-P2 EPOXY BEAD	8-1	-83.754	-5.4802	-3.6858	-5.70 MAX	0.2198	MOVED			8.3
86A	-P2 EPOXY BEAD	8-1	-40.971	-5.7514	-3.913	-5.70 MAX	-0.0514	MOVED			8.3
87A	-P3 EPOXY BEAD	8-1	-2.7093	-3.8114	-5.759	-5.70 MAX	-0.059	MOVED			8.3
88A	-P3 EPOXY BEAD	8-1	-40.805	-3.8973	-5.7469	-5.70 MAX	-0.0469	MOVED			8.3
89A	-P3 EPOXY BEAD	8-1	-74.39	-3.8937	-5.5061	-5.70 MAX	0.1939	MOVED			8.3
90A	-P1 SURFACE	8-3	-85.714	2.8362	7.4704	-86.1 -0, +0.11	0.386				8.7
91A	-P1 SURFACE	8-3	-85.918	15.84	20.5284	-86.1 -0, +0.11	0.1621				8.7
92A	-P3 EPOXY BEAD	8-1	-74.334	17.0655	-5.5187	-5.50 MAX	-0.0187	MOVED			8.4
93A	-P3 EPOXY BEAD	8-1	-13.53	17.1366	-5.5381	-5.50 MAX	-0.0381	MOVED			8.4
94A	+P2 RADIATOR CLAMP	8-1	-16.841	29.0906	-5.4753	-5.50 MAX	0.0247	NEW			8.3
98A	-P3 G/E BULKHEAD SIDE	8-4	-85.06	27.0257	-5.0036	-5.50 MAX	0.4964				8.7
102A	AFT, -P3 RADIATOR BRKT.	8-4	-86.103	27.6082	-3.4016	-86.1 -0, +0.11	-0.0033	NEW			8.7
103A	AFT, -P3 RADIATOR BRKT. HOLE	8-4	-85.461	29.1536	-2.2445	N.A.		NEW			8.7
104A	AFT, -P3 RADIATOR BRKT. HOLE	8-4	-85.464	29.1294	-1.744	N.A.		NEW			8.7
105A	AFT, -P3 RADIATOR BRKT. HOLE	8-4	-85.472	29.149	-0.5533	N.A.		NEW			8.7
106A	AFT, -P3 RADIATOR BRKT. HOLE	8-4	-85.468	29.131	0.6461	N.A.		NEW			8.7
107A	AFT, -P3 RADIATOR BRKT. HOLE	8-4	-85.479	29.158	1.1511	N.A.		NEW			8.7
108A	AFT, -P3 RADIATOR BRKT. SURF.	8-4	-85.746	28.9638	1.1148	29.1 MAX	0.1362	NEW			8.7
109A	AFT, -P3 RADIATOR BRKT. SURF.	8-4	-85.666	28.9646	-1.9582	29.1 MAX	0.1354	NEW			8.7
110A	AFT, +P3 RADIATOR BRKT. HOLE	8-4	-85.436	29.1506	16.2482	N.A.		NEW			8.7
111A	AFT, +P3 RADIATOR BRKT. HOLE	8-4	-85.432	29.1316	16.7482	N.A.		NEW			8.7
112A	AFT, +P3 RADIATOR BRKT. HOLE	8-4	-85.441	29.163	17.9432	N.A.		NEW			8.7
113A	AFT, +P3 RADIATOR BRKT. HOLE	8-4	-85.433	29.134	19.1396	N.A.		NEW			8.7
114A	AFT, +P3 RADIATOR BRKT. HOLE	8-4	-85.446	29.1676	19.6399	N.A.		NEW			8.7
115A	AFT, +P3 RADIATOR BRKT. SURF.	8-4	-85.675	28.9714	16.5552	29.1 MAX	0.1286	NEW			8.7
116A	AFT, +P3 RADIATOR BRKT. SURF.	8-4	-85.736	28.9739	19.8353	29.1 MAX	0.1261	NEW			8.7
117A	AFT, +P3 RADIATOR BRKT. SURF.	8-4	-86.086	28.3903	19.8841	-86.1 -0, +0.11	0.0141	NEW			8.7
118A	AFT, +P3 RADIATOR BRKT. SURF.	8-4	-86.084	28.4454	16.5774	-86.1 -0, +0.11	0.0166	NEW			8.7
119A	AFT, +P3 RADIATOR BRKT. SURF.	8-4	-85.706	28.7344	15.5	N.A.		NEW			8.7
120A	GUIDE STRIP	8-3	-86.096	-0.2003	-5.6306	-86.12 +/- 0.01	-0.0236		-0.015	248	8.6
121A	GUIDE STRIP	8-3	-85.843	-0.055	-5.9029	-5.92 +/- 0.01	-0.0171		-0.018	252	8.6
122A	GUIDE STRIP	8-3	-85.564	-0.5706	-5.7684	0.55 +/- 0.01	0.0206		0.026	244	8.6
123A	GUIDE STRIP	8-3	-85.544	-0.5714	-5.8266	0.55 +/- 0.01	0.0214		0.026	244	8.6
124A	GUIDE STRIP	8-3	-86.1	10.8939	-5.65	-86.12 +/- 0.01	-0.0206		-0.006	260	8.6
125A	GUIDE STRIP	8-3	-85.765	10.8794	-5.9078	-5.92 +/- 0.01	-0.0122		-0.012	256	8.6

- OUT-OF-TOLERANCE DELTA VALUES ARE IN BOXES
- ALL VALUES IN INCHES
- BOXED DIMENSIONS ARE APPLICABLE
- AFT, -P3 RADIATOR BRACKET NON-FLIGHT — TO BE REPLACED PRIOR TO FLIGHT

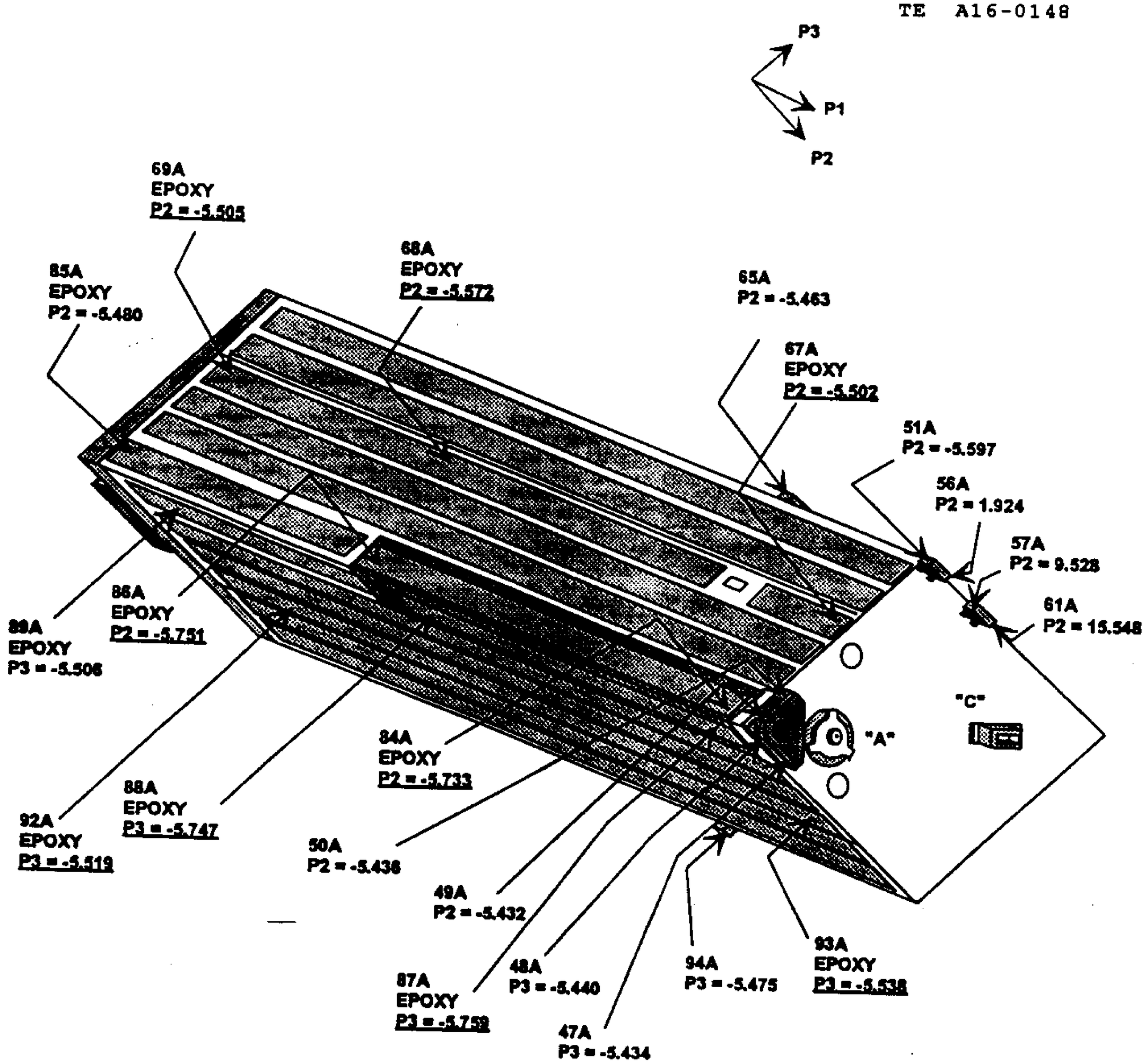

* ALL DIMENSIONS IN INCHES
* UNDERLINED DIMENSIONS OUT OF TOLERANCE

FIGURE 8-1 STIS -P2/-P3 SIDE VIEW, 10/11/96

TT-101- IE
27 FEBRUARY 1998
IRN 111
06 DECEMBER 1996

TE A16-0148

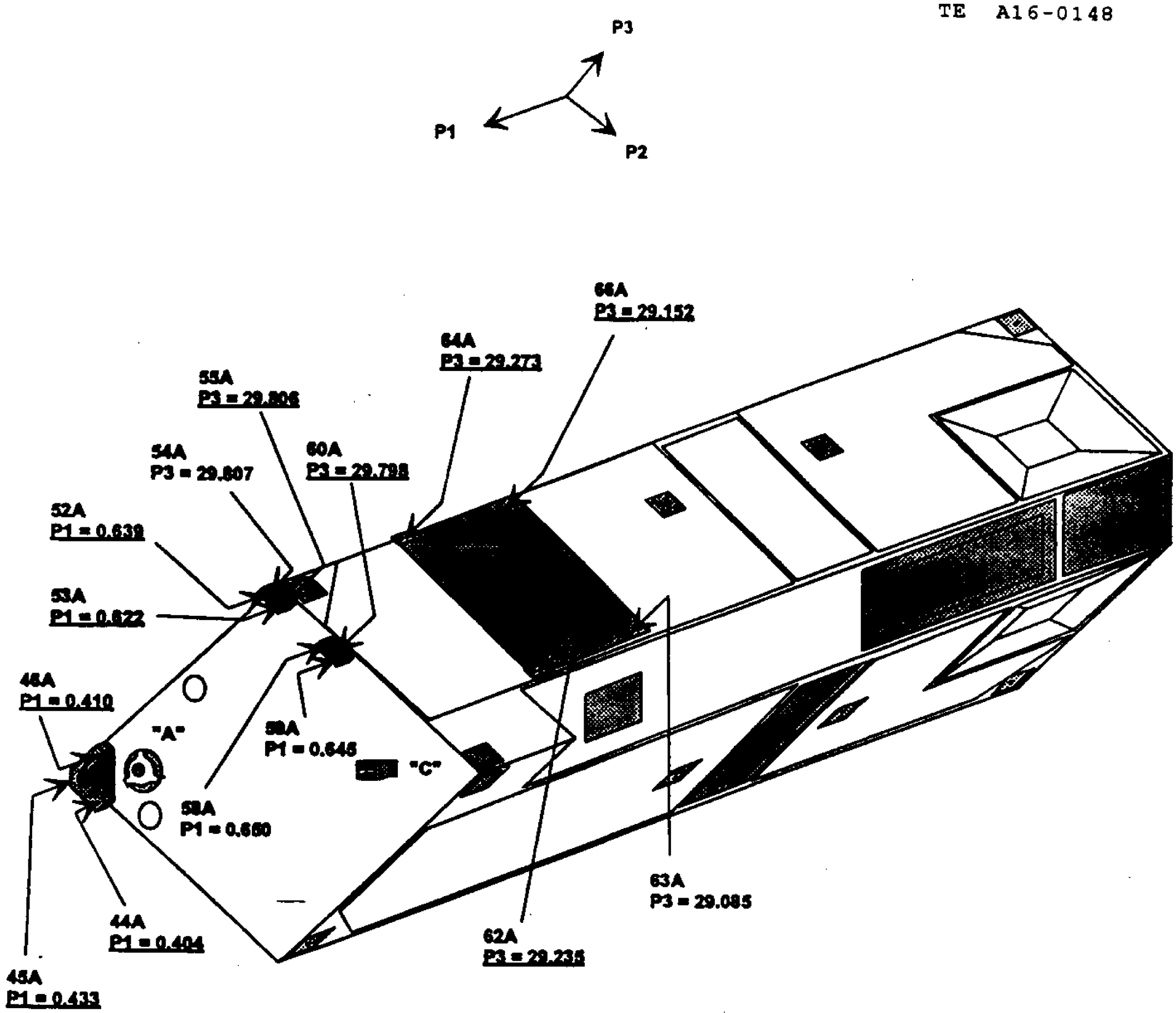

* ALL DIMENSIONS IN INCHES
* UNDERLINED DIMENSIONS OUT OF TOLERANCE

FIGURE 8-2 STIS +P2/+P3 SIDE VIEW, 10/11/96

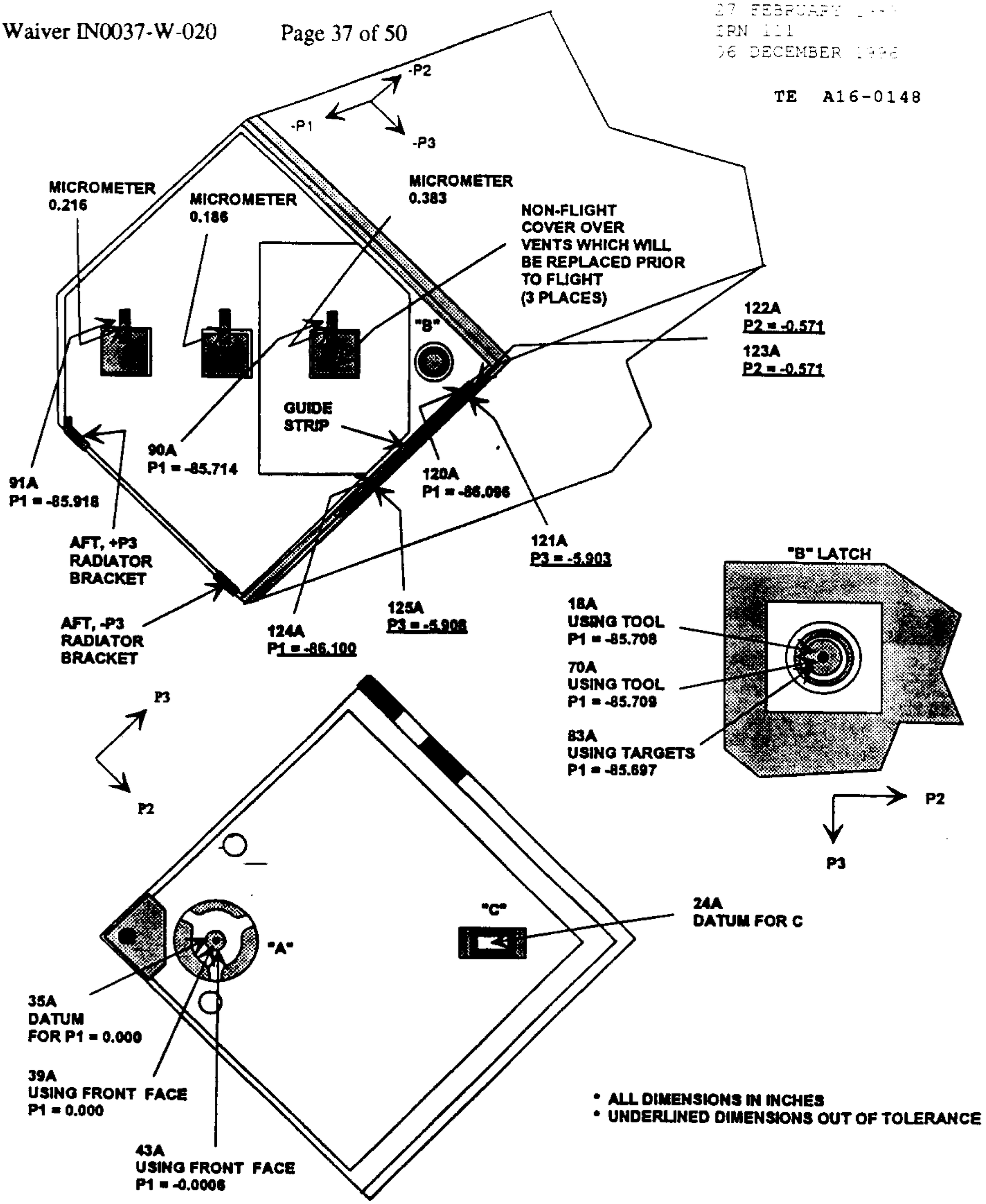

FIGURE 8-3 STIS SELECTED VIEWS, 10/11/96

IRN 111
06 DECEMBER

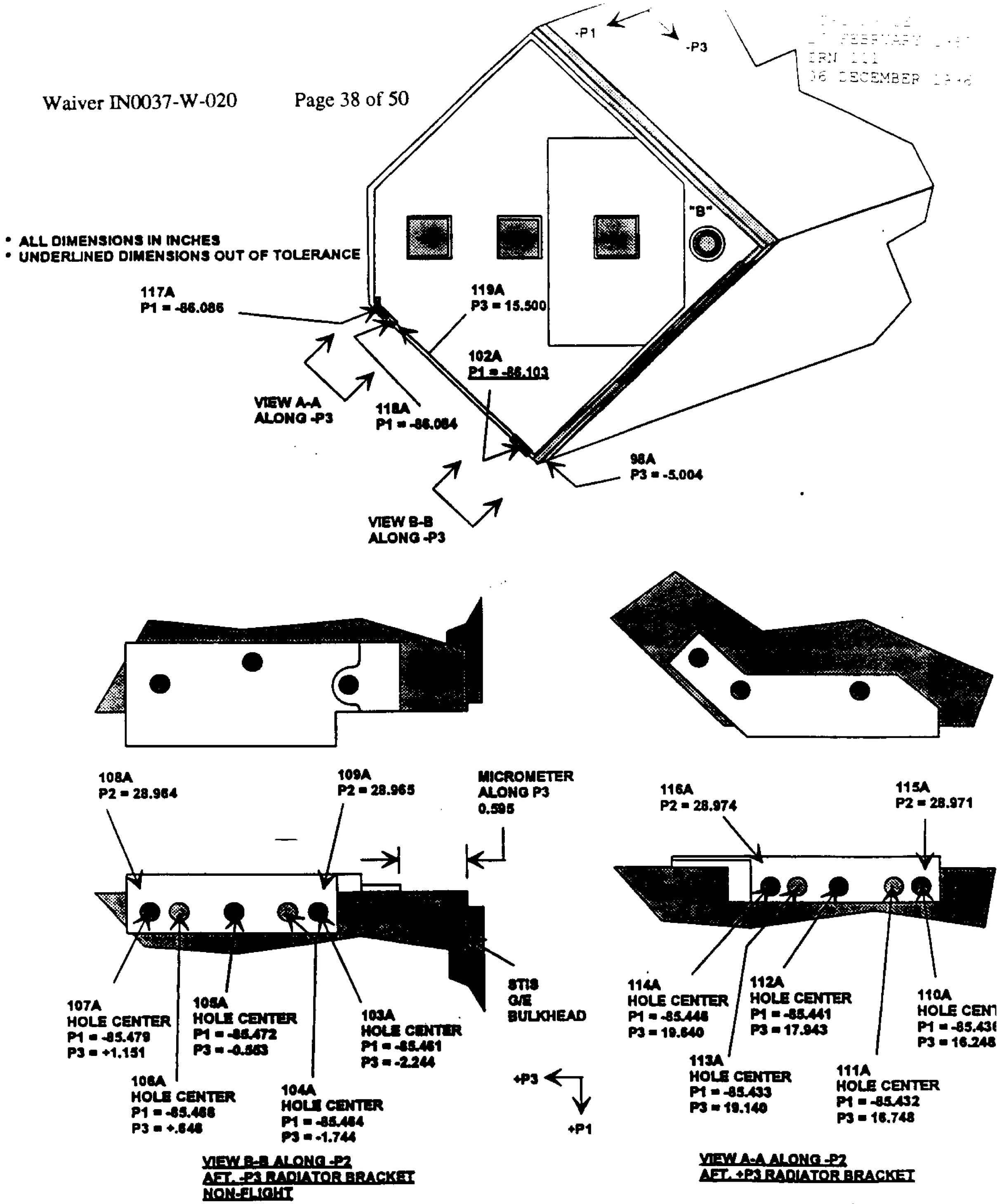

FIGURE 8-4 STIS AFT RADIATOR BRACKETS, 10/11/96 REV A

(NEW PAGE CREATED BY IRN 111)

The measured envelope and guide block placement values all are acceptable without modification. Table 8-1 summarizes the AIMS measurements, and Figures 8-1 through 8-4 illustrate the locations of the measurements. In Table 8-1, the column headed by "No." refers to the AIMS data base number for that measurement point. These points can be identified on the figures which are listed under the column "FIG". The coordinates of the data points are listed in STIS P-coordinates which are defined by the latches. The applicable coordinates are boxed, and the remaining degrees of freedom are somewhat arbitrary and can not be correlated with any specific requirement. The table lists the requirement for each data point as defined in ICD-02, Section 4. The differences between the requirements and the actual measured points are contained in column "DELTA". All out-of-tolerance data points are boxed in the "DELTA" column. The status of new or changed items is listed under the column "STATUS", the two columns "6/28/96 DELTA AND TARGET" list, for convenience, the comparable data points from Table 6-1. Finally, the report sections which discuss the out-of-tolerance items are listed under the column "SECTION".

8.2 APERTURE SHUTTER

Since the original measurements on 6/28/96, the front aperture shutter EMU assembly was replaced with the flight assembly. Data points 44A through 50A contain the measured envelope. The EMU was outside the ICD-02 allowed envelope in the P1 direction by 0.031 inch. Similarly, the flight model exceeds the envelope by a maximum of 0.033 inch. This condition was discussed in detail in Section 6.4.7 for the EMU and is equally applicable to the flight unit. Therefore, this out-of-tolerance condition of targets 44A, 45A, and 46A are acceptable.

8.3 +P3 RADIATOR

When first measured in 6/28/96, the +P3 radiator panel was constrained by clamps with protruding bolts. Targets 119, 123, 127, and 131 of this original data set (see Table 6-1) were outside the ICD allowed tolerance by as much as 0.327 inch. Subsequently, the clamps were redesigned to recess the bolts. The new clamp measurements are shown in targets 62A, 64A, and 65A in Table 8-1. These clamps still exceed the allowed envelope, but the profile has been reduced from 0.327 inch to 0.173 inch beyond tolerance. The radiator panel itself was removed and replaced following the original envelope measurements. The panel exceeds the ICD allowed envelope by 0.052 inch (target 66A) but the panel has a much lower profile than the clamps. Target 66A is very close to target 139 in the 6/28/96 data set, and their P3 values agree to within 0.001 inch. The discussion of acceptability of this tolerance overage is contained in Section 6.4.3 and still is applicable.

8.4 -P2/-P3 PANEL EPOXY BEADS

Panels on the -P2 and -P3 instrument sides were removed and replaced since the 6/28/96 measurements. The panels contain numerous epoxy beads which hold low emissivity coatings in place. Measurements were made near the four corners of each panel, but no attempt was made to select the same beads as were measured originally. Targets 67A, 68A, 69A, 84A, 86A, 87A, and 88A exceed the ICD-02 requirements but do not constitute new information. Measurements were made on the perceived largest beads in the measurement area. The largest value, target 68A, was measured at 0.072 inches beyond the ICD-02 allowed value whereas target 175 of the original data set (Table 6-1) was the largest previous exceedence of 0.052. The locations of these panels are acceptable as discussed in Sections 6.4.4 and 6.4.5.

8.5 GUIDE BLOCKS

The inboard and outboard guide blocks were aligned during the 6/28/96 measurements and were liquid pinned in place at that time. When STIS was returned to Ball and installed into HOMS, the blocks were removed. The reinstalled guide block locations were remeasured on 10/11/96. Targets 51A through 61A contain the locations of the guide blocks and can be compared with targets 84 through 117 or the original data base contained in Table 6-1. Table 8-1 compares the two sets of measurements in the two columns "delta" for the 10/11/96 measurements and "6/28/95 delta" for the original measurements. All measurements agree to within 0.003 inch with the exception of data point 53A. Data points 52A, 53A, 55A, and 60A are out of tolerance, with data point 52A being the only new item.

The P1 location of the outboard end of the inboard guide block has moved in the -P1 direction from 0.6421 inch to 0.6218 inch and is out of tolerance by 0.016 inch. This alignment is acceptable as-is and does not require adjustment. The guide block to guide strip separation in P1 provides a gap with the OTA guide rail separation in P1 so that the instrument can slide down the OTA guide rail channel. The instrument overall length is defined by the outboard guide block as aligned (see target 58A) so that the change in alignment of this inboard guide block position has no affect on STIS installation into the OTA or the ASIPE.

The estimated 2σ measurement uncertainty is 0.005 inch. The remaining data point measurements agree with the original data set to within 0.003 inch. Data points 52A and 55A are less than 0.0015 inch out of tolerance, which values can not be distinguished from the measurement error. Therefore, they are acceptable. For data point 60A, see Section 8.6.

8.6 GUIDE STRIP

The position of the guide strip was remeasured on 10/11/96. There is good agreement between this data base and the 6/28/96 data base wherever the data

points coincide. Target 124A of Table 8-1 differs from target 260 of Table 6-1 by 0.014 inch, but the two measurements were made over 1 inch apart so could represent an irregularity in the guide strip surface. Data points 121A, 122A/123A, 124A, and 125A exceed tolerances. However, only data point 124A represents new information. The overall separation between the guide blocks and strip in the P1 direction is 86.750 inch as defined by target 58A on the outboard guide block and target 124A on the guide strip. The corresponding separation at the OTA guide rails is 86.886 which provides an installation gap of 0.136 inch. This gap is sufficient for installation, and therefore, this out-of-tolerance condition will not pose a problem.

Targets 122A and 123A are two measurements of the same data point which were made after adjusting the measurement sphere between measurements. The two measurements agree to within 0.001 inch but exceed the ICD requirement by 0.01 inch. This is not new information, and the discussion of Section 6.4.8 still is valid.

Data points 121A and 125A are out of tolerance in the P3 direction and must be considered along with data point 60A on the outboard guide block. The side-to-side separation of the guide block/strip is 35.706 inches as compared to 35.914 inches in the OTA. This 0.208 inch gap is adequate for alignment.

8.7 AFT RADIATOR AND -P1 SURFACE

Two new events have affected the -P1 instrument surface. Two new radiator brackets have been installed to accommodate radiators which either will be installed this servicing mission or the next one, and new vents will replace the current vents.

Figure 8-3 illustrates the three vents. Non flight covers currently are installed. Both AIMS measurements and depth micrometer measurements were made to provide sufficient data that the vent P1 extents can be determined once they are installed by simply making depth micrometer measurements from the covers to the instrument surface. Data points 91A and 90A were made to the permanent STIS surface. The depth micrometer measurements are shown in Figure 8-3.

The two new radiator brackets are illustrated in Figures 8-3 and 8-4. A non-flight bracket was installed at the -P3 position during the measurement since the flight bracket was still in fabrication. All bracket measurements fell within the ICD-02 requirements with the exception of data point 102A on the non-flight bracket. Since this bracket will be replaced, its actual P1 location will have to be determined by making micrometer thickness measurements of the two pieces and comparing the results.

An AIMS data point, 98A, was made on the -P3 instrument edge and a depth micrometer measurement was made to the -P3 side bracket. See Figure 8-4 for

both. The combination of these two measurements can be used to determine the P3 location of the flight bracket when it is installed.

The locations of the centers of the 5 holes in each bracket on the +P2 surfaces were measured by placing a 0.500 inch diameter tooling ball in the holes and measuring its location using AIMS. The locations of these holes will aid in any future modeling which may be required using STAR in the HFMS.

8.8 LATCHES

The 3 interface latches were not removed and replaced since the original measurements. However, the latch locations have to be remeasured each time AIMS is used in order to establish the latch P coordinate system. Tools were used to metrologize the "B" and "C" latches as discussed in Section 7.1.

The "A" latch location was determined using the AIMS spherical fit routine to determine the sphere center using a 0.500 inch diameter tooling ball as a target to sample the latch surface. Data point 35A is the result of that data fit with the coordinate system defined as 0-0-0 at this point. As a double check, the tooling ball was placed on the flat surface at the latch face which is controlled to within 0.001 inch of the sphere center to a value of 0.437 inch. Data points 39A and 43A represent two measurements on this latch surface and show good agreement with the spherical fit method to within 0.001 inch. Only the P1 dimension could be checked in this way.

The "B" latch tool was used to determine the location of this latch. Data point 18A can be compared with data point 27 of Table 6-1 for the 6/28/96 measurements. The two disagree by 0.009 inch. Later in the measurement set, the latch tool was inspected and found to be damaged. The spherical ball in the tool, see Figure 7-1, was not epoxy bonded as it was originally, and the bead of epoxy had rotated with respect to a Delrin clamp. The latch position was remeasured at this time (data point 70A) and found to be the same as data point 18A. At that time, 4 K&E stick on targets were placed on kapton tape and placed on the "B" latch spherical bearing. The resultant of the AIMS measurements and average of the 4 data points is shown in the P1 dimension of data point 83A. This measurement shows that the latch is within tolerance. The latch tool will be recertified in the future. (See Appendix G of TE A16-0147, Rev A.) In the mean time, the original measurements of 6/28/96 are the applicable data.

IRN 111
06 DECEMBER 1996

HUGHES DANBURY OPTICAL SYSTEMS

MEMORANDUM

DATE: November 21, 1996 A16-ST-1114

TO: Lee Feinberg

FROM: Philip J. Young Philip J. Young

RE: STIS Aft Radiator Bracket

cc: T. Cole, D. Connolly, C. Connor, L. Farwell, L. Furey, J. Gay, HDOS Document Control, R. Heidenreich, D. Jones, LMMS Document Control, J. Ryan, H. Sampler, N. Vadlamudi

The flight aft radiator bracket on the -P3 instrument side was not available for envelope verification during the Oct. 1996 AIMS measurements. At that time, a non-flight bracket was installed on the instrument. Data points 102A through 109A of test report TE-A16-0148A apply to the non flight bracket. On 11/15/96 both the non-flight bracket and the flight bracket thickness' were measured by Ball Quality Assurance using a micrometer. Appendix A contains the data sheet. The -P1 dimension, data point 102A for the non-flight bracket, was measured as P1 = -86.103 inches and was found to be greater than the allowed ICD-02 value by 0.003 inch. Using the micrometer data to scale the non-flight bracket dimensions to the flight bracket P1 dimension, the flight bracket is also located at P1 = -86.103 inches. This out-of-tolerance condition is within the estimated 1σ measurement error and is acceptable for installation of the instrument into the ASIPE and the HST. The instrument -P1 dimension is important for clearing the HST door and the peripheral beam during installation into the guide rails. The axial guide strip is nominally located at P1 = -86.12 inches which is 0.017 inch beyond the bracket envelope. Comparison of the GHRS guide block to guide strip length with the STIS length shows the GHRS is 0.019 inch longer. Therefore, STIS will not experience any length problems during installation into the HST.

During the September 1996 crew FAM, it was noticed that the aft radiator bracket had rubbed on something. This anomaly was documented in Hubble Anomaly Report (HAR) 0429. Later, it was determined that the bracket had rubbed on a decal on the A-SIPE aft guide rail. Figure 1 shows a sketch of the bracket. Subsequently, the bracket was modified to reduce the envelope in the area where it rubbed. This will prevent further interference's during installation.

(NEW PAGE CREATED BY IRN 111)
10.7-57

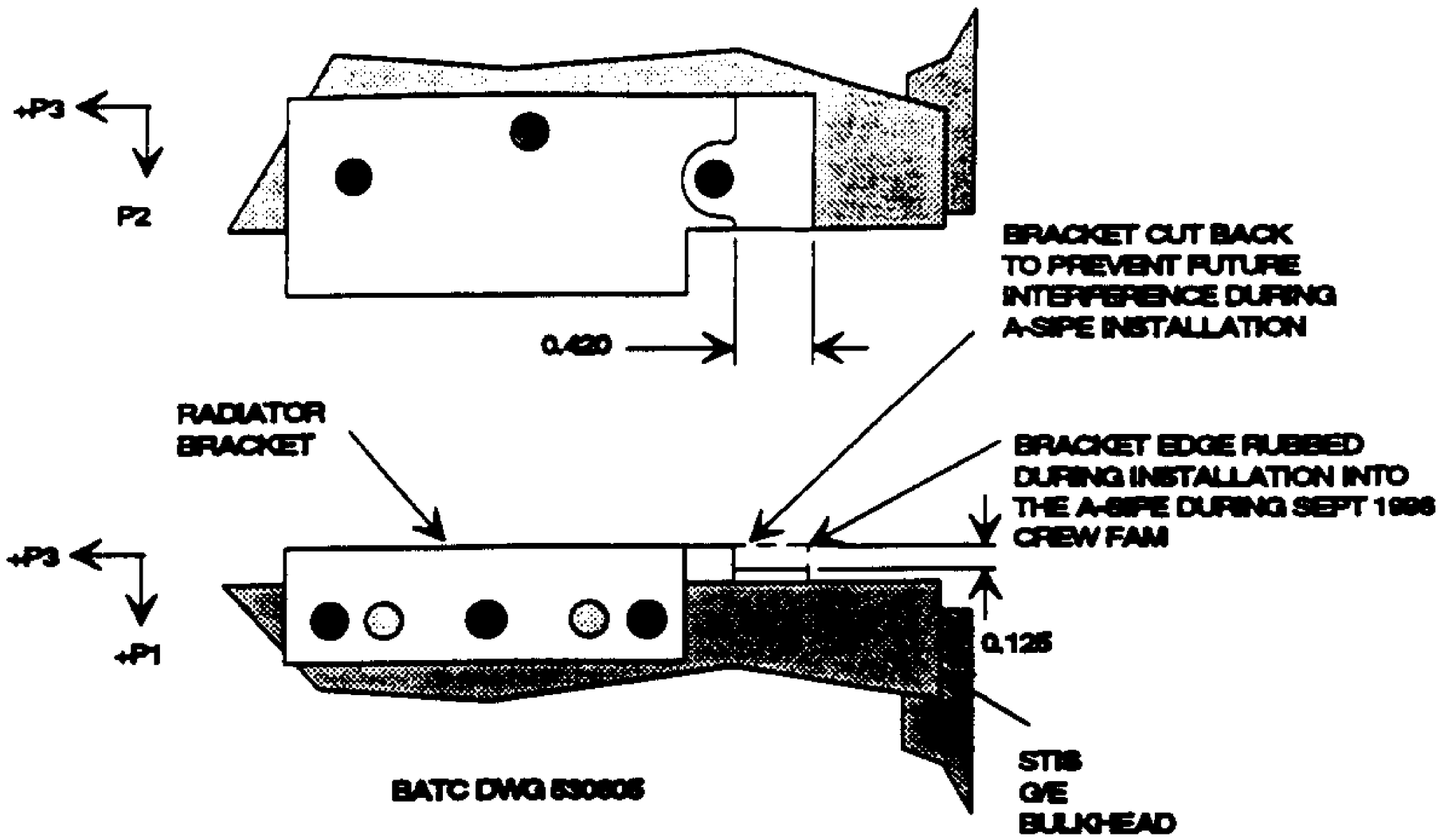

FIGURE 1 AFT RADIATOR BRACKET

In addition to replacing the radiator bracket, two of the three vents on the -P1 instrument end were replaced on 11/14/96. The height above the -P1 surface of the middle vent, which protrudes farthest in P1, was measured with a depth micrometer both before and after it was changed out. The location of the bulkhead surface was measured with AIMS on 10/11/96. Therefore, the P1 location of the vent can be determined by adding the micrometer reading to the AIMS bulkhead reading. AIMS data point 91A has a P1 location of -85.918 inch, and the micrometer reading at the vent was 0.170 inch. Therefore, the vent is located at P1 = -86.088 inch. The ICD requirement is P1 = -86.1 -0, +0.11. Therefore, the new vent lies within the allowed envelope. The measurement data sheet is contained in Appendix B.

APPENDIX A

AFT RADIATOR BRACKET DATA SHEET

3

(NEW PAGE CREATED BY IRN 111)

.4685

.647

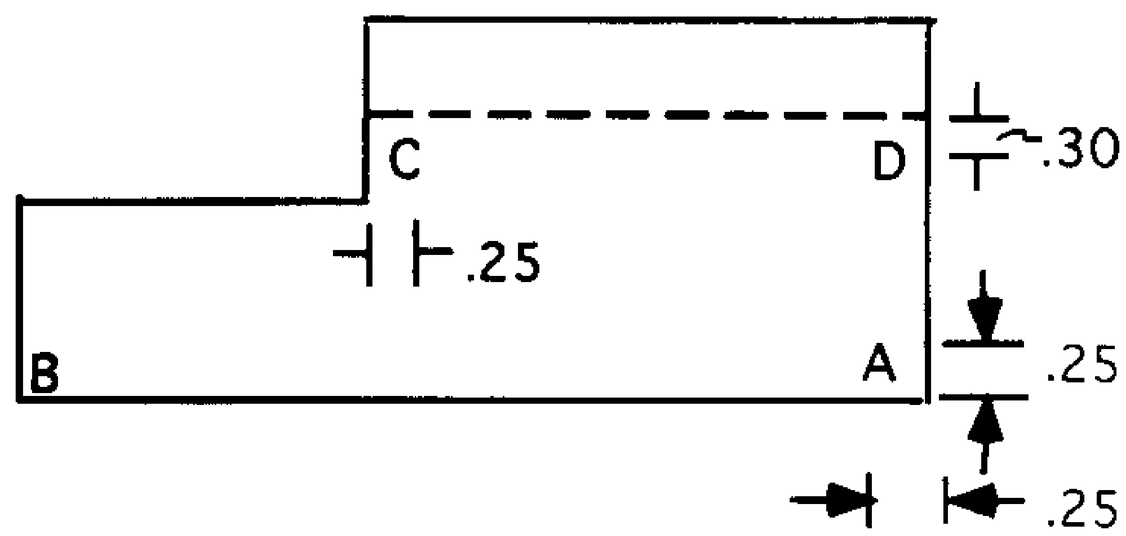

.317 .185

.315 .184

	OLD	NEW
A	.182	.179
B	.184	.179
C	.312	.312
D	.314	.313

4

IRN 111
06 DECEMBER

APPENDIX B

VENT DATA SHEET

(NEW PAGE CREATED BY IRN 111)
10.7-61

STIS		11-14-96
A	0.750" Block	.750
B	0.870"	.920
C	1.100"	1.150

Without EMI
(OLD)

With EMI
(NEW)

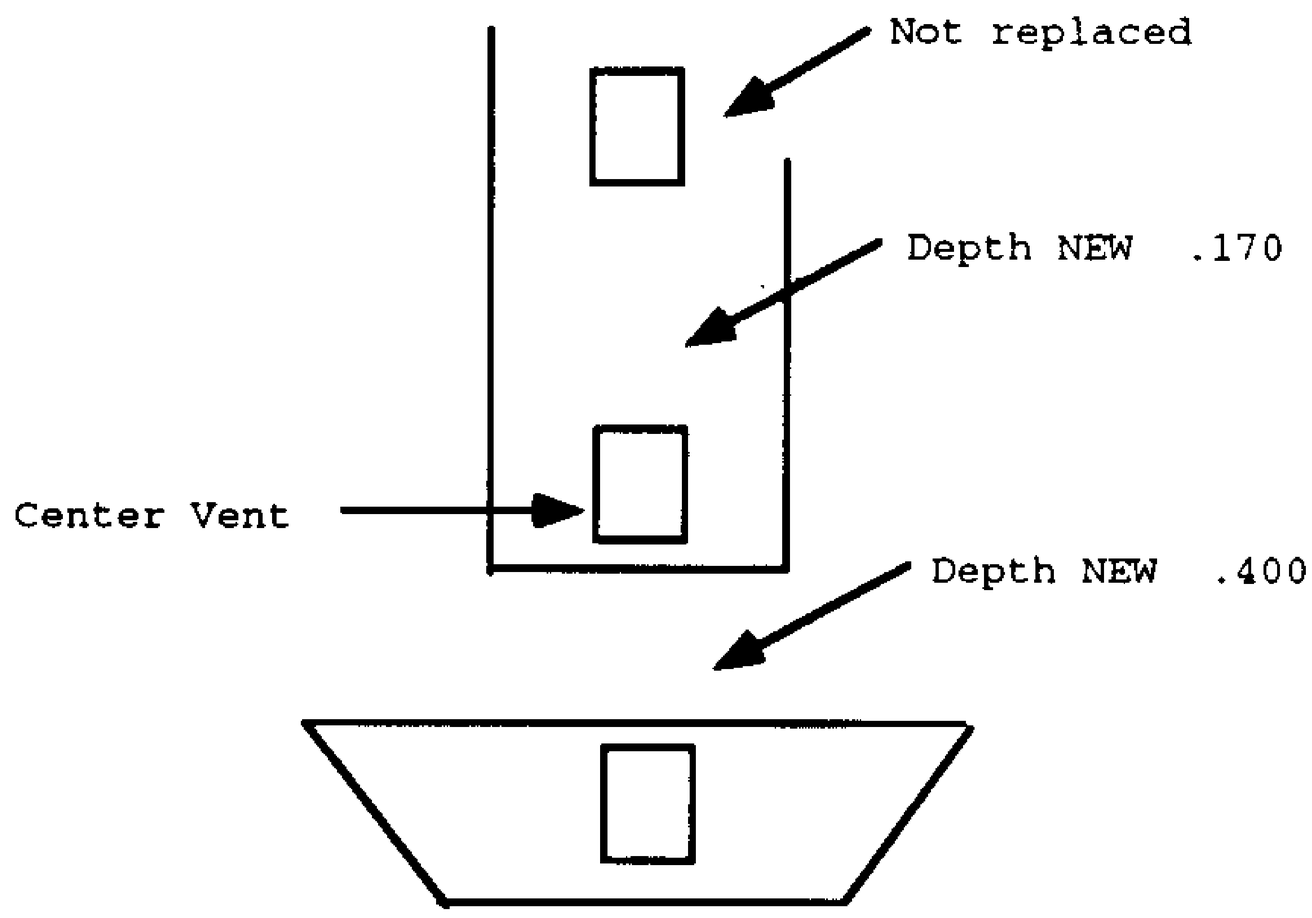

View from Panel Interior

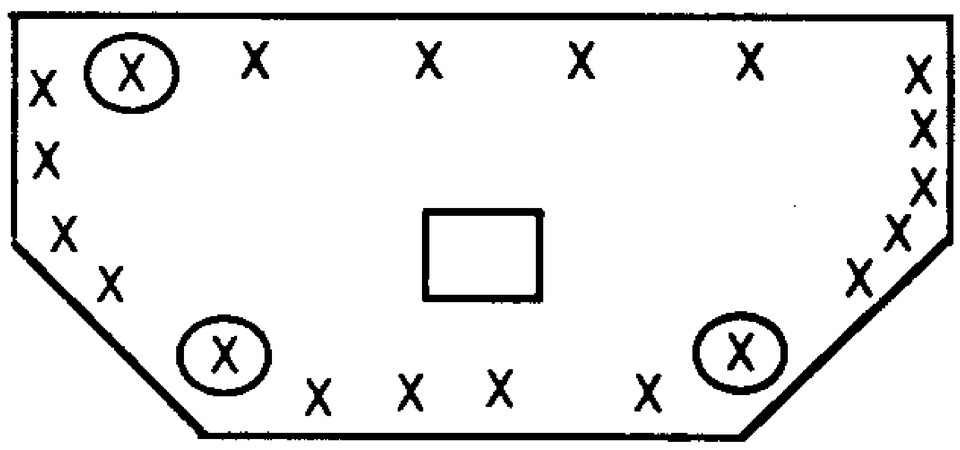

X = Insert Removed w/fastener

6

CROSS REFERENCE OF STIS EXCEEDANCES TO ST-ICD-02 FIGURES (Page 1 of 2)

No.	FIG	Table 6-1 & 8-1 NAME	P1	P2	P3	REQUIREMENT	DELTA	SECTION	ST-ICD-02 Figure(s)
1 135	6-3	PANEL	-16.2311	-3.9049	29.1657	P3 = 29.1 MAX	+0.066	6.4.3	4.3-1
2 139	6-3	PANEL	-30.4388	-4.5012	29.1525	P3 = 29.1 MAX	+.053	6.4.3	4.3-1
3 143	6-3	PANEL	-23.7351	20.5741	29.1085	P3 = 29.1 MAX	+.009	6.4.3	4.3-1
4 159	6-2	-P2 SIDE EPOXY	-2.6342	-5.7362	0.0874	P2 = -5.70 MAX	+0.036	6.4.4	4.3-1
5 163	6-2	-P2 SIDE EPOXY	-2.7713	-5.7421	-3.9042	P2 = -5.70 MAX	+0.042	6.4.4	4.3-1
6 167	6-2	-P2 SIDE EPOXY	-41.0499	-5.7327	0.0659	P2 = -5.70 MAX	+0.033	6.4.4	4.3-1
7 171	6-2	-P2 SIDE EPOXY	-41.0117	-5.7463	-3.879	P2 = -5.70 MAX	+0.046	6.4.4	4.3-1
8 175	6-2	-P3 SIDE EPOXY	-2.7507	-3.794	-5.7518	P3 = -5.70 MAX	+0.052	6.4.5	4.3-1
9 178	6-2	-P3 SIDE EPOXY	-2.6877	0.2757	-5.7262	P3 = -5.70 MAX	+0.026	6.4.5	4.3-1
10 183	6-2	-P3 SIDE EPOXY	-40.8029	0.1037	-5.7474	P3 = -5.70 MAX	+0.047	6.4.5	4.3-1
11 187	6-2	-P3 SIDE EPOXY	-40.8282	-3.8568	-5.7345	P3 = -5.70 MAX	+0.035	6.4.5	4.3-1
12 248	6-4	GUIDE STRIP	-86.1054	-0.308	-5.6201	P1 = -86.12 +/- 0.01	-0.015	6.4.1	4.3-4 & 13a
13 44A	8-2	SHUTTER P1	0.4036	-0.1745	-5.2197	0.4 MAX	-0.0036	8.2	4.3-1 & 4
14 45A	8-2	SHUTTER P1	0.4326	-4.5703	-5.1632	0.4 MAX	-0.0326	8.2	4.3-1 & 4
15 46A	8-2	SHUTTER P1	0.4098	-4.9458	-0.3349	0.4 MAX	-0.0098	8.2	4.3-1 & 4
16 52A	8-2	INBOARD GUIDE BLOCK	0.6393	-3.8391	29.3176	0.645 +/- 0.005	-0.0057	8.5	4.3-4 & 13
17 53A	8-2	INBOARD GUIDE BLOCK	0.6218	1.1055	29.2557	0.645 +/- 0.005	-0.0232	8.5	4.3-4 & 13
18 55A	8-2	INBOARD GUIDE BLOCK	0.2031	1.0708	29.8057	29.812 +/- 0.005	-0.0063	8.5	4.3-13
19 60A	8-2	OUTBOARD GUIDE BLOCK	0.3663	12.5731	29.7984	29.812 +/- 0.005	-0.0136	8.5	4.3-13
20 62A	8-2	+P3 RADIATOR CLAMP	-16.7374	20.792	29.2351	29.1 MAX	0.1351	8.3	4.3-1
21 64A	8-2	+P3 RADIATOR CLAMP	-16.7155	-4.9863	29.2731	29.1 MAX	0.1731	8.3	4.3-1
22 66A	8-2	+P3 RADIATOR	-29.3905	-4.5987	29.1524	29.1 MAX	0.0524	8.3	4.3-1
23 67A	8-1	-P2 EPOXY BEAD	-2.7087	-5.502	17.0733	-5.50 MAX	-0.002	8.3	4.3-1
24 68A	8-1	-P2 EPOXY BEAD	-52.5533	-5.5716	17.1514	-5.50 MAX	-0.0716	8.3	4.3-1
25 69A	8-1	-P2 EPOXY BEAD	-83.7736	-5.5054	17.0195	-5.50 MAX	-0.0054	8.3	4.3-1
26 84A	8-1	-P2 EPOXY BEAD	-2.8172	-5.733	-3.9337	-5.70 MAX	-0.033	8.3	4.3-1
27 86A	8-1	-P2 EPOXY BEAD	-40.9705	-5.7514	-3.913	-5.70 MAX	-0.0514	8.3	4.3-1

(NEW PAGE CREATED BY IRN 111)
10.7-63

7

CROSS REFERENCE OF STIS EXCEEDANCES TO ST-ICD-02 FIGURES (Page 2 of 2)

28	87A	8-1	-P3 EPOXY BEAD	-2.7093	-3.8114	-5.759	-5.70 MAX	-0.059	8.3	4.3-1
29	88A	8-1	-P3 EPOXY BEAD	-40.8046	-3.8973	-5.7469	-5.70 MAX	-0.0469	8.3	4.3-1
30	90A	8-3	-P1 SURFACE	-85.714	2.8362	7.4704	-86.1 -0, +0.101	0.386	8.7	4.3-1 & 4
31	91A	8-3	-P1 SURFACE	-85.9179	15.84	20.5284	-86.1 -0, +0.101	0.1821	8.7	4.3-1 & 4
32	92A	8-1	-P3 EPOXY BEAD	-74.3338	17.0855	-5.5187	-5.50 MAX	-0.0187	8.4	4.3-1
33	93A	8-1	-P3 EPOXY BEAD	-13.5295	17.1366	-5.5381	-5.50 MAX	-0.0381	8.4	4.3-1
34	102A	8-4	AFT, -P3 RADIATOR BRKT.	-86.1033	27.6082	-3.4018	-86.1 -0, +0.101	-0.0033	8.7	4.3-1 & 4
35	121A	8-3	GUIDE STRIP	-85.8431	-0.055	-5.9029	-5.92 +/- 0.01	-0.0171	8.6	4.3-1 & 12
36	123A	8-3	GUIDE STRIP	-85.5438	-0.5714	-5.8266	0.55 +/- 0.01	0.0214	8.6	4.3-12
37	124A	8-3	GUIDE STRIP	-86.0995	10.8939	-5.65	-86.12 +/- 0.01	-0.0205	8.6	4.3-4 & 13a
38	125A	8-3	GUIDE STRIP	-85.7548	10.8794	-5.9078	-5.92 +/- 0.01	-0.0122	8.6	4.3-13

(NEW PAGE CREATED BY IRN 111)
10.7-64

REQUEST FOR DEVIATION/WAIVER (RFD/RFW)

1. DATE (YYMMDD): 96/09/20

ST-ICD-02E
27 FEBRUARY 1985
IRN 113
24 JANUARY 1997

Public reporting burden for this collection of information is estimated to average 2 hours per response, including the time for reviewing instructions searching existing data sources, gathering and maintaining the data needed and completing and reviewing the collection of information. Send comments regarding this burden estimate or any other aspect of this collection of information, including suggestion for reducing the burden to Washington Headquarters Services, Directorate of Information Operations and Reports, 1215 Jefferson Davis, Highway, Suite 1204, Arlington, VA 22202-4302, and to the Office of Information and Regulatory Affairs, Office of Management and Budget, Washington, D C 20503

PLEASE DO NOT RETURN YOUR COMPLETED FORM TO EITHER OF THESE ADDRESSES. RETURN COMPLETED FORM TO THE GOVERNMENT ISSUING CONTRACTING OFFICER FOR THE CONTRACT/PROCURING ACTIVITY NUMBER LISTED IN ITEM 2 OF THIS FORM

2. PROCUREMENT NUMBER:

3. DODAAC:

4. ORIGINATOR

a. Ball Aerospace Technologies Corp

Don Hood

b. ADDRESS (Street, City, State, Zip code)
P.O. Box 1062
Boulder, CO 80306-1062

5. (X one) ○ Deviation ☒ Waiver

6. (X one) ○ Minor ☒ Major ○ Critical

7. DESIGNATION FOR DEVIATION /WAIVER

a. MODEL/TYPE	b. CAGE CODE	c. SYS. DESIG.	d. DEV/WAIVER NO.
STIS	13993	IN0037A	IN0037-W-026

8. BASELINE AFFECTED: ☒ Functional ○ Allocated ○ Product

9. OTHER SYSTEM CONFIGURATION ITEMS AFFECTED: ○ YES ☒ NO

10. TITLE OF DEVIATION/WAIVER
AFT BULKHEAD TEMPERATURE

NAS5-29370

12. PROCURING CONTRACTING OFFICER
a. NAME (First, Middle Initial, Last) Rosa Acevedo
b. CODE 286
c. TELEPHONE NO (301) 286-6993

13. CONFIGURATION ITEM NOMENCLATURE
Space Telescope Imaging Spectrograph
STIS

14. CLASSIFICATION OF DEFECT
a. CD NO
b. DEFECT NO.
c. DEFECT CLASSIFICATION N/A ○ MINOR ○ MAJOR ○ CRITICAL

15. NAME OF LOWEST PART/ASSEMBLY AFFECTED
STIS

16. PART NO. OR TYPE DESIGNATION
521000-500

17. EFFECTIVITY
S/N 0001

18. RECURRING DEVIATION/WAIVER ○ YES ☒ NO

19. EFFECT ON COST/PRICE
None if approved

20. EFFECT ON DELIVERY SCHEDULE
None if approved

21. EFFECT ON INTEGRATED LOGISTICS, SUPPORT, INTERFACE OR SOFTWARE
None if approved

22. DESCRIPTION OF DEVIATION/WAIVER
Allow aft bulkhead temperature to be -20C to +25C (an increase of 5C above present requirement).

23. NEED FOR DEVIATION/WAIVER
System testing (thermal vacuum test) coupled with the correlated thermal model shows that the aft bulkhead temperature will be 23C + or - 2C. This exceeds ICD - 02E para. 4.6.1.1.1.c of ....-20C to +20C.... Since the model has an error bar of 2C (See SER STIS-THRM-074) we request a maximum temperature of 25C.

24. CORRECTIVE ACTION TAKEN
Request change to ICD-02E to allow increased bulkhead temperature.

25. SUBMITTING ACTIVITY

a. TYPED NAME (First, Middle Initial, Last)
Dave L. Fish Hood for Fish (via Tilson)

b. TITLE
Product Assurance Manager

c. SIGNATURE

26. APPROVAL/DISAPPROVAL

a. RECOMMEND ○ APPROVAL ○ DISAPPROVAL

b. APPROVAL
☒ APPROVED ○ DISAPPROVED

c. GOVERNMENT ACTIVITY
Deputy Associate Director of Flight Projects for HST

d. TYPE NAME (First, Middle Initial, Last)
James S. Barrowman

e. SIGNATURE

f. DATE SIGNED (YYMMDD)
970124

g. APPROVAL
☒ APPROVED ○ DISAPPROVED

h. GOVERNMENT ACTIVITY
NASA/GSFC, Code 216

i. TYPED NAME (First, Middle Initial, Last)
ROSA E. ACEVEDO
CONTRACTING OFFICER

j. SIGNATURE

k. DATE SIGNED (YYMMDD)
970203

(NEW PAGE CREATED BY IRN 113)

REQUEST FOR DEVIATION/WAIVER (RFD/RFW)

1. DATE (YYMMDD) 970113

NUMBER

Public reporting burden for this collection of information is estimated to average 2 hours per response, including the time for reviewing instructions, searching existing data sources, gathering and maintaining the data needed, and completing and reviewing the collection of information. Send comments regarding this burden estimate or any other aspect of this collection of information, including suggestions for reducing this burden, to Department of Defense, Washington Headquarters Services, Directorate for Information Operations and Reports, 1215 Jefferson Davis Highway, Suite 1204, Arlington, Va 22202-4302, and to the Office of Management and Budget, Paperwork Reduction Project (0704-0188), Washington, DC 20503.
PLEASE DO NOT RETURN YOUR COMPLETED FORM TO EITHER OF THESE ADDRESSES. RETURN COMPLETED FORM TO THE GOVERNMENT ISSUING CONTRACTING OFFICER FOR THE CONTRACT/PROCURING ACTIVITY NUMBER LISTED IN ITEM 2 OF THIS FORM.

3. DODAAC

4. ORIGINATOR

a. TYPED NAME (First, Middle Initial, Last): John E. Decker

b. ADDRESS (Street, City, State, Zip Code): Goddard Space Flight Center, Greenbelt, Md. 20770, Code 442

5. (X one): [ ] DEVIATION [XX] WAIVER

6. (X one): [ ] MINOR [XX] MAJOR [ ] CRITICAL

7. DESIGNATION FOR DEVIATION/WAIVER

a. MODEL/TYPE	b. CAGE CODE	c. SYS. DESIG.	d. DEV/WAIVER NO.
STIS			STIS-W-001

8. BASELINE AFFECTED: [ ] FUNCTIONAL PRODUCT [XX] ALLOCATED

9. OTHER SYSTEM/CONFIGURATION ITEMS AFFECTED: [ ] YES [XX] NO

10. TITLE OF DEVIATION/WAIVER: STIS REVISED WEIGHT

11. CONTRACT NO. AND LINE ITEM: N/A

12. PROCURING CONTRACTING OFFICER
a. NAME (First, Middle Initial, Last): N/A
b. CODE
c. TELEPHONE NO.

13. CONFIGURATION ITEM NOMENCLATURE: STIS

14. CLASSIFICATION OF DEFECT
a. CD NO.
b. DEFECT NO.
c. DEFECT CLASSIFICATION: [ ] MINOR [XX] MAJOR [ ] CRITICAL

15. NAME OF LOWEST PART/ASSEMBLY AFFECTED: STIS

16. PART NO. OR TYPE DESIGNATION: N/A

17. EFFECTIVITY: All

18. RECURRING DEVIATION/WAIVER: [ ] YES [XX] NO

19. EFFECT ON COST/PRICE: None if approved.

20. EFFECT ON DELIVERY SCHEDULE: None if approved.

21. EFFECT ON INTEGRATED LOGISTICS SUPPORT, INTERFACE OR SOFTWARE: None

22. DESCRIPTION OF DEVIATION/WAIVER
STIS fly-away weight will be 837 lb., which includes 807 lb. for the SI (versus 805 lb approved for the SI in waiver IN0037-W-006), 18 lb. for GFE unique to STIS, and 12 lb. for the L-handle. C.G. is P1=-42.7, P2=10.8, P3=10.5 inches.

23. NEED FOR DEVIATION/WAIVER
This waiver will supplement waiver IN0037-W-006 and incorporate actual measurements in place of projected mesasurements (see attached "STIS Weight and CG" summary, supplied by Jim Metzger).

24. CORRECTIVE ACTION TAKEN
None

25. SUBMITTING ACTIVITY
a. TYPED NAME (First, Middle Initial, Last): John E. Decker
b. TITLE: Flight Systems Engineer
c. SIGNATURE: John E. Decker

26. APPROVAL/DISAPPROVAL
a. RECOMMEND [ ] APPROVAL [ ] DISAPPROVAL

b. APPROVAL: [X] APPROVED [ ] DISAPPROVED
c. GOVERNMENT ACTIVITY: Deputy Associate Director of Flight Projects for HST
d. TYPED NAME (First, Middle Initial, Last): James S. Barrowman
e. SIGNATURE: James S. Barrowman
f. DATE SIGNED (YYMMDD): 970113 97/01/13

APPROVAL: [ ] APPROVED [ ] DISAPPROVED
h. GOVERNMENT ACTIVITY: QUALITY ASSURANCE MANAGER
i. TYPED NAME (First, Middle Initial, Last):
j. SIGNATURE:
g. DATE SIGNED (YYMMDD):

(NEW PAGE CREATED BY IRN 113)

DD Form 1694, APR 92

STIS WEIGHT AND CG

The Ball mass properties report SER WT-006, dated 6/26/96, shows the STIS weight at 804 lb, plus a GFE weight of 18 lb, which gives a total predicted instrument weight of 822 lb. However, 9 lb for the MEB cover extensions has not been included, and the GFE weight is understated by 10 lb due to the actual higher weight of the L-handle. With these corrections made, the tabulated weight of the STIS instrument becomes 813 lb plus 28 lb for GFE to give a calculated STIS fly-away weight of 841 lb.

The measured weight of STIS at GSFC, including all GFE except for the L-handle, was 825 lb. When 12 lb is added for the actual weight of the L-handle, the actual STIS fly-away weight is projected to be 837 lb.

Previously, a waiver to the ICD requirements was granted to allow a STIS weight of up to 805 lb without GFE. The ICD further allocates 23 lb for the GFE which then implies a total instrument fly-away weight limit on the latches of 828 lb.

Based on the measured weights, the STIS exceeds the allowable weight limit by 9 lb, which is greater than the weight reporting tolerance of +/-5 lb provided in the ICD.

Both the tabulated and the measurement-derived Center of Gravity calculations show the CG to be within the envelope established by the previous ICD waiver.

MEASURED CG: (w/o L-handle) P1 = -42.7, P2 = 10.8, P3 = 10.5 INCHES

CURRENT WAIVER ALLOWS LATERAL CG AT: P2,3 = 12 +1/-2 INCHES

SUMMARY: The delivered STIS weighs 825 lb consisting of 807 lb for SI plus 18 lb for GFE unique to STIS. This is the basis for a new waiver request. The L-handle adds 12 lb but is neither SI nor GFE per the ICD; it is charged to Crew Aids and Tools. With the L-handle installed, the total instrument weight becomes 837 lb to be carried on the latches. The most recent Flight Loads Analysis has accounted for the L-handle and indicates that more than adequate strength margins exist to accommodate the total expected instrument weight.

10.8 NICMOS Deviations and Waivers

IRN 108

The Near-Infrared Camera and Multi-Object Spectrometer (NICMOS), STE-31, is relieved from the requirements of this ICD to the extent shown on the NASA approved deviation and waiver requests listed below and included on the following pages.

		Page	
10.8.1	IN0048-D-004, NICMOS Weight Deviation	10.8-2	
10.8.2	IN0048-D-005, NICMOS Power Deviation	10.8-5	IRN 109
10.8.3	IN0048-W-012, NICMOS Radiated Emissions Waiver	10.8-7	IRN 112
10.8.4	IN0048-W-013, NICMOS Guide Block Metrology Waiver	10.8-24	
10.8.5	IN0048-W-016, NICMOS Lateral Stiffness Waiver	10.8-61	
10.8.6	IN0048-D-004A, NICMOS Revised Weight Deviation	10.8-62	IRN 113

(This supersedes page 10.8-1 dated 18 December 1996)

REQUEST FOR DEVIATION/WAIVER (RFD/RFW)

1. DATE (YYMMDD): 95-04-27

Form Approved OMB No 0704-0188

Public reporting burden for this collection of information is estimated to average 4 hours per response, including the time for reviewing instructions, searching existing data sources, gathering and maintaining the data needed and completing and reviewing the collection of information. Send comments regarding this burden estimate or any other aspect of this collection of information, including suggestions for reducing this burden to Washington Headquarters Services, Directorate for Information Operations and Reports, 1215 Jefferson Davis Highway, Suite 1204, Arlington, VA 22202-4302, and to the Office of Information and Regulatory Affairs, Office of Management and Budget, Washington, D.C. 20503

PLEASE DO NOT RETURN YOUR COMPLETED FORM TO EITHER OF THESE ADDRESSES. RETURN COMPLETED FORM TO THE GOVERNMENT ISSUING CONTRACTING OFFICER FOR THE CONTRACT/PROCURING ACTIVITY NUMBER LISTED IN ITEM 2 OF THIS FORM.

2. PROCURING ACTIVITY NUMBER: RECEIVED MAY 0

3. DODAAC:

4. ORIGINATOR
a. Ball Aerospace Systems Division

b. ADDRESS (Street, City, State, Zip code)
P.O. Box 1062
Boulder, CO 80306-1062

5. (X one): X Deviation O Waiver

6. (X one): O Minor X Major O Critical

7. DESIGNATION FOR DEVIATION /WAIVER

a. MODEL/TYPE	b. CAGE CODE	c. SYS. DESIG.	d. DEV/WAIVER NO.
NICMOS	13993	IN0048	IN0048-D-004

8. BASELINE AFFECTED: O Functional X Allocated O Product

9. OTHER SYSTEM CONFIGURATION ITEMS AFFECTED: O YES X NO

10. TITLE OF DEVIATION/WAIVER
NICMOS Weight(Deviation from ST-ICD-02E)

11. CONTRACT NO. AND LINE ITEM
NAS5-31289 subcontract 172984

12. PROCURING CONTRACTING OFFICER
a. NAME (First, Middle Initial, Last): Linda Steen
b. CODE:
c. TELEPHONE NO: (520) 621-6088

13. CONFIGURATION ITEM NOMENCLATURE
Near-Infrared Camera and Multi-Object Spectrometer (NICMOS)

14. CLASSIFICATION OF DEFECT

a. CD NO	b. DEFECT NO.	c. DEFECT CLASSIFICATION N/A
N/A	N/A	O MINOR O MAJOR O CRITICAL

15. NAME OF LOWEST PART/ASSEMBLY AFFECTED
NICMOS

16. PART NO. OR TYPE DESIGNATION
517000-500

17. EFFECTIVITY
All

18. RECURRING DEVIATION/WAIVER: O YES X NO

19. EFFECT ON COST/PRICE
none if approved

20. EFFECT ON DELIVERY SCHEDULE
none if approved

21. EFFECT ON INTEGRATED LOGISTICS, SUPPORT, INTERFACE OR SOFTWARE
none

22. DESCRIPTION OF DEVIATION/WAIVER
see attached

23. NEED FOR DEVIATION/WAIVER
see attached

24. CORRECTIVE ACTION TAKEN
see attached

25. SUBMITTING ACTIVITY

a. TYPED NAME (First, Middle Initial, Last)	b. TITLE	c. SIGNATURE
Dave L. Fish	Product Assurance Manager	Dave L. Fish

26. APPROVAL/DISAPPROVAL: a. RECOMMEND X APPROVAL O DISAPPROVAL Paul R. Arthur

b. APPROVAL: X APPROVED O DISAPPROVED

c. GOVERNMENT ACTIVITY: NASA/GODDARD SPACE FLIGHT CENTER GREENBELT RD., GREENBELT, MD 20771

d. TYPE NAME (First, Middle Initial, Last)	e. SIGNATURE	f. DATE SIGNED (YYMMDD)
GIFFORD P. MOAK	Gifford P. Moak	95/07/07

g. APPROVAL: O APPROVED O DISAPPROVED

h. GOVERNMENT ACTIVITY

i. TYPED NAME (First, Middle Initial, Last)	j. SIGNATURE	k. DATE SIGNED (YYMMDD)

DD Form 1694, APR 92 — Previous editions are obsolete.

(NEW PAGE CREATED BY IRN 108)

22. Description of Deviation/Waiver

Allow NICMOS maximum fly-away weight to be 852 pounds, i.e. 821 pounds which includes two GFE RIUs, plus 31 pounds for other GFE (latches, guideblocks and guiderails, connectors, ground strap lug, one astronaut handle, one auxiliary handle, and associated fasteners). See weight breakout below:

ITEM	WEIGHT (pounds)
NICMOS without GFE	811.4
flight RIUs (2 @4.7 pounds each)	9.4
subtotal NICMOS	**821**
other GFE: (see ICD-02E sec 4.5.3)	
A latch	5.7
B latch	5.7
C latch	3.0
connectors	0.7
ground strap attachment	0.5
guidestrips and guideblocks	3.0
astronaut handle (1)	2.0
auxilliary handle (1) (from STR-46)	10
subtotal other GFE	**31**
total NICMOS fly-away	852

23. Need for Deviation/Waiver

Axial SI weight is limited to 760 pounds, which includes two GFE RIUs but excludes other GFE (e.g. latches). SI mass properties are governed by ST-ICD-02E, section 4.5.3. Replacement SI weight is limited mainly by the load carrying capacity of the ASIPE latches. Without this deviation, NICMOS compliance with performance specifications is impossible.

One way to reduce the fly-away weight of NICMOS is to launch it without its auxilliary handle attached. Although this would incur additional EVA on-orbit, NICMOS weight would be within allowable limits according to loads analyses that have been performed (see item 24, Corrective Action, below). The only other way to effectively reduce weight within the current NICMOS design, retaining functional redundancy features (e.g. redundant electronics) and avoiding redesign, retest, and serious cost and schedule impacts, is by reducing the amount of cryogen. **This is considered a last resort, as it directly affects scientific return.** NICMOS is designed to carry 239 pounds of cryogen and is required to last 5 years on-orbit under assumed nominal operating conditions (see NICMOS CEI Specification, STE-31). Therefore, each pound of cryogen equates to approximately a week (7.7 days mean) of lifetime. For NICMOS to reach the current

weight limit solely by deleting cryogen, approximately 61 pounds (1.2 years) of solid Nitrogen would need to be left out of the dewar, and NICMOS would be significantly handicapped and not meet its lifetime requirements.

24. Corrective Action Taken

NICMOS weight is under strict control and will not be allowed to materially increase. At the time of this request, NICMOS is in the final stages of component fabrication and is undergoing subsystem integration, and therefore significant weight changes are unlikely anyway.

The ASIPE to SI interface, specifically the ASIPE-B latch, has been redesigned to increase ASIPE load carrying capacity and allow for such weight growth in an axial SI. Preliminary loads analyses using 845 pounds for total NICMOS weight have yielded results with acceptable margins. Further analyses will be performed.

REQUEST FOR DEVIATION/WAIVER (RFD/RFW)

1. DATE (YYMMDD): 95-04-27

Form Approved OMB No 0704-0188

RECEIVED MAY 0 1 1995

Public reporting burden for this collection of information is estimated to average 2 hours per response, including the time for reviewing instructions, searching existing data sources, gathering and maintaining the data needed, and completing and reviewing the collection of information. Send comments regarding this burden estimate or any other aspect of this collection of information, including suggestions for reducing this burden, to Washington Headquarters Services, Directorate for Information Operations and Reports, 1215 Jefferson Davis Highway, Suite 1204, Arlington, VA 22202-4302, and to the Office of Information and Regulatory Affairs, Office of Management and Budget, Washington, D.C. 20503.

PLEASE DO NOT RETURN YOUR COMPLETED FORM TO EITHER OF THESE ADDRESSES. RETURN COMPLETED FORM TO THE GOVERNMENT ISSUING CONTRACTING OFFICER FOR THE CONTRACT/PROCURING ACTIVITY NUMBER LISTED IN ITEM 2 OF THIS FORM.

2. PROCURING ACTIVITY NUMBER

3. DODAAC

4. ORIGINATOR

a. Ball Aerospace Systems Division

b. ADDRESS (Street, City, State, Zip code)
P.O. Box 1062
Boulder, CO 80306-1062

5. (X one) X Deviation O Waiver

6. (X one) O Minor X Major O Critical

7. DESIGNATION FOR DEVIATION /WAIVER

a. MODEL/TYPE	b. CAGE CODE	c. SYS. DESIG.	d. DEV/WAIVER NO.
NICMOS	13993	IN0048	IN0048-D-005

8. BASELINE AFFECTED: O Functional X Allocated O Product

9. OTHER SYSTEM CONFIGURATION ITEMS AFFECTED: O YES X NO

10. TITLE OF DEVIATION/WAIVER
NICMOS Power (Deviation from ST-ICD-02E)

11. CONTRACT NO. AND LINE ITEM
NAS5-31289 subcontract 172984

12. PROCURING CONTRACTING OFFICER
a. NAME (First, Middle Initial, Last): Linda Steen
b. CODE
c. TELEPHONE NO (301) 621-4088

13. CONFIGURATION ITEM NOMENCLATURE
Near-Infrared Camera and Multi-Object Spectrometer (NICMOS)

14. CLASSIFICATION OF DEFECT

a. CD NO	b. DEFECT NO.	c. DEFECT CLASSIFICATION (N/A)
N/A	N/A	O MINOR O MAJOR O CRITICAL

15. NAME OF LOWEST PART/ASSEMBLY AFFECTED
NICMOS/Scientific Instrument

16. PART NO. OR TYPE DESIGNATION
517000-500

17. EFFECTIVITY
All

18. RECURRING DEVIATION/WAIVER: O YES X NO

19. EFFECT ON COST/PRICE
none if approved

20. EFFECT ON DELIVERY SCHEDULE
none if approved

21. EFFECT ON INTEGRATED LOGISTICS, SUPPORT, INTERFACE OR SOFTWARE
none

22. DESCRIPTION OF DEVIATION/WAIVER
Allow the following limits for NICMOS per-orbit power requirements: ~~105W~~ 100 W during hold, ~~200W~~ 187 W avg/250W peak (2 minutes) during ~~cold~~ operate, ~~and 172W avg/250W peak (2 minutes) during hot operate.~~ R1

23. NEED FOR DEVIATION/WAIVER
see attached

24. CORRECTIVE ACTION TAKEN
see attached

25. SUBMITTING ACTIVITY

a. TYPED NAME (First, Middle Initial, Last)	b. TITLE	c. SIGNATURE
Dave L. Fish	Product Assurance Manager	Dave Fish

26. APPROVAL/DISAPPROVAL

a. RECOMMEND X APPROVAL O DISAPPROVAL Paul H. Sutton

b. APPROVAL w/change
X APPROVED O DISAPPROVED

c. GOVERNMENT ACTIVITY
NASA/GODDARD SPACE FLIGHT CENTER

d. TYPE NAME (First, Middle Initial, Last): GIFFORD P. MOAK

e. SIGNATURE: Gifford P. Moak

f. DATE SIGNED (YYMMDD): 95/07/28

g. APPROVAL
O APPROVED O DISAPPROVED

h. GOVERNMENT ACTIVITY

i. TYPED NAME (First, Middle Initial, Last)

j. SIGNATURE

k. DATE SIGNED (YYMMDD)

DD Form 1694, APR 92 — Previous editions are obsolete.

(NEW PAGE CREATED BY IRN 109)

23. Need for Deviation/Waiver

SI power consumption is limited to 58W during hold and 150W average/250W peak (2 minutes) per orbit during operate, per ST-ICD-02E sections 4.6.1.1.4 and 4.7. These limits are driven by HST thermal constraints and power availability. Without this deviation, NICMOS compliance with ST-ICD-02E and performance requirements (NICMOS CEI Specifications, STE-31) is impossible. Specifically, line-of-sight stability would be inadequate, reducing image quality and observing time and thus diminishing scientific quality and output.

First-order analysis of post SM-1 performance of the HST indicates that adequate power and thermal capacity will be available to meet requested limits. Updated analyses may be done.

24. Corrective Action Taken

NICMOS power limits are under strict control and will not be allowed to materially increase. Given that NICMOS is an infrared instrument, the natural desire is to eliminate any unnecessary power dissipation because it could degrade observations. The requested limits are based on design predictions and include approximately 15 percent additional margin. Since NICMOS Block II CDR, the requested limits have been in place and predicted power requirements have not changed significantly, nor have they come close to the limits.

REQUEST FOR DEVIATION/WA. _R (RFD/RFW)

1. DATE (YYMMDD): 96/09/18

IRN: 112
19 DECEMBER 1996

Public reporting burden for this collection of information is estimated to average 2 hours per response, including the time for reviewing instructions, searching existing data sources, gathering and maintaining the data needed and completing and reviewing the collection of information. Send comments regarding this burden estimate or any other aspect of this collection of information, including suggestions for reducing this burden to Washington Headquarters Services, Directorate for Information Operations and Reports, 1215 Jefferson Davis Highway, Suite 1204, Arlington, VA 22202-4302, and to the Office of Information and Regulatory Affairs, Office of Management and Budget, Washington, D.C. 20503

PLEASE DO NOT RETURN YOUR COMPLETED FORM TO EITHER OF THESE ADDRESSES. RETURN COMPLETED FORM TO THE GOVERNMENT ISSUING CONTRACTING OFFICER FOR THE CONTRACT/PROCURING ACTIVITY NUMBER LISTED IN ITEM 2 OF THIS FORM.

2. PROC. NUMBER

3. DODAAC

4. ORIGINATOR

a. Ball Aerospace Technologies Corp

John Meadows

b. ADDRESS (Street, City, State, Zip code)
P.O. Box 1062
Boulder, CO 80306-1062

5. (X one) O Deviation X Waiver

6. (X one) O Minor X Major O Critical

7. DESIGNATION FOR DEVIATION/WAIVER

a. MODEL/TYPE	b. CAGE CODE	c. SYS. DESIG.	d. DEV/WAIVER NO.
NICMOS	13993	IN0048B	IN0048-W-012

8. BASELINE AFFECTED: O Functional X Allocated O Product

9. OTHER SYSTEM CONFIGURATION ITEMS AFFECTED: O YES X NO

10. TITLE OF DEVIATION/WAIVER
Radiated Emissions from NICMOS

11. CONTRACT NO. AND LINE ITEM
U of A Contract 172984

12. PROCURING CONTRACTING OFFICER
a. NAME (First, Middle Initial, Last) Linda Steen
b. CODE 286
c. TELEPHONE NO 520/621-6068

13. CONFIGURATION ITEM NOMENCLATURE
Near-Infrared Camera and Multi-Object Spectrometer
NICMOS

14. CLASSIFICATION OF DEFECT

a. CD NO	b. DEFECT NO.	c. DEFECT CLASSIFICATION
		O MINOR X MAJOR O CRITICAL

15. NAME OF LOWEST PART/ASSEMBLY AFFECTED
NICMOS

16. PART NO. OR TYPE DESIGNATION
517000-500

17. EFFECTIVITY
B/N 0001

18. RECURRING DEVIATION/WAIVER: X YES O NO

19. EFFECT ON COST/PRICE
None if Approved

20. EFFECT ON DELIVERY SCHEDULE
None if Approved

21. EFFECT ON INTEGRATED LOGISTICS, SUPPORT, INTERFACE OR SOFTWARE
None

22. DESCRIPTION OF DEVIATION/WAIVER
USE AS IS - The Radiated Emissions exceed specification. See attached EMI-R211 Report. Appendix III Section 30 (RE02)

23. NEED FOR DEVIATION/WAIVER
The emissions seem to be eminating from the GSFC furnished RIU and the Ground Support Equipment. With GSE off emissions are reduced. With RIU off emission are also reduced. We cannot test for MEB on RIU/GSE off because of the System Power on Interface requirements.

24. CORRECTIVE ACTION TAKEN
No corrective action taken.

25. SUBMITTING ACTIVITY

a. TYPED NAME (First, Middle Initial, Last)	b. TITLE	c. SIGNATURE
John F. Meadows	Project Engineer Quality Assurance	John Meadows

26. APPROVAL/DISAPPROVAL: a. RECOMMEND O APPROVAL O DISAPPROVAL

b. APPROVAL	c. GOVERNMENT ACTIVITY	
X APPROVED O DISAPPROVED	Deputy Associate Director of Flt. Projects for HST	
d. TYPE NAME (First, Middle Initial, Last): James S. Barrowman	e. SIGNATURE: James S Barrowman	f. DATE SIGNED (YYMMDD): 12/18/96 961218
g. APPROVAL: X APPROVED O DISAPPROVED	h. GOVERNMENT ACTIVITY: Contracting Officer	
i. TYPED NAME (First, Middle Initial, Last): Gifford P. Moak	j. SIGNATURE: Gifford P. Moak	k. DATE SIGNED (YYMMDD): 970124

DD Form 1694, APR 92 — Previous editions are obsolete.

(NEW PAGE CREATED BY IRN 112)

EMI-R211

APPENDIX III, Section 30

30. RADIATED EMISSIONS (RE02)

30.1 Test objective. The NICMOS instrument was tested for compliance to BATC document 519821 for spectral density and magnitudes of electric field RF energy emanating from the NICMOS instrument assembly.

30.2 Test description. The NICMOS instrument was placed in the anechoic chamber and bonded to the ground plane floor. All Input/Output (I/O) cabling was raised 5 centimeters above the ground plane using nonconductive material. The dc power was set to 28 volts. The NICMOS instrument was activated as described in BATC document 519821 for RE02 testing. The radiated emissions were measured and recorded. The test setup is shown in Figure 30-1 of this report.

30.3 Test results. Following application of power to the NICMOS instrument, the results showed that radiated levels exceeded the specifications defined in BATC document 519821. The test data is shown in Figures 30-2 through 30-11.

Ambient plots were run from 14 kHz to 200 MHz to help in defining failures which exceed the limit. It was noted that differences between ambient and full operation were that some of the emissions were radiating from the NICMOS instrument from 4 MHz to 10MHz, and a few other select frequencies. Some of the signals appeared to originate from the RIU unit when powered on. Discounting the ambient and RIU signals which are above the test limit, the NICMOS instrument still exceeds the test limit as specified.

ORIGINAL
27 FEBRUARY
IRN 112
18 DECEMBER

EMI-R211

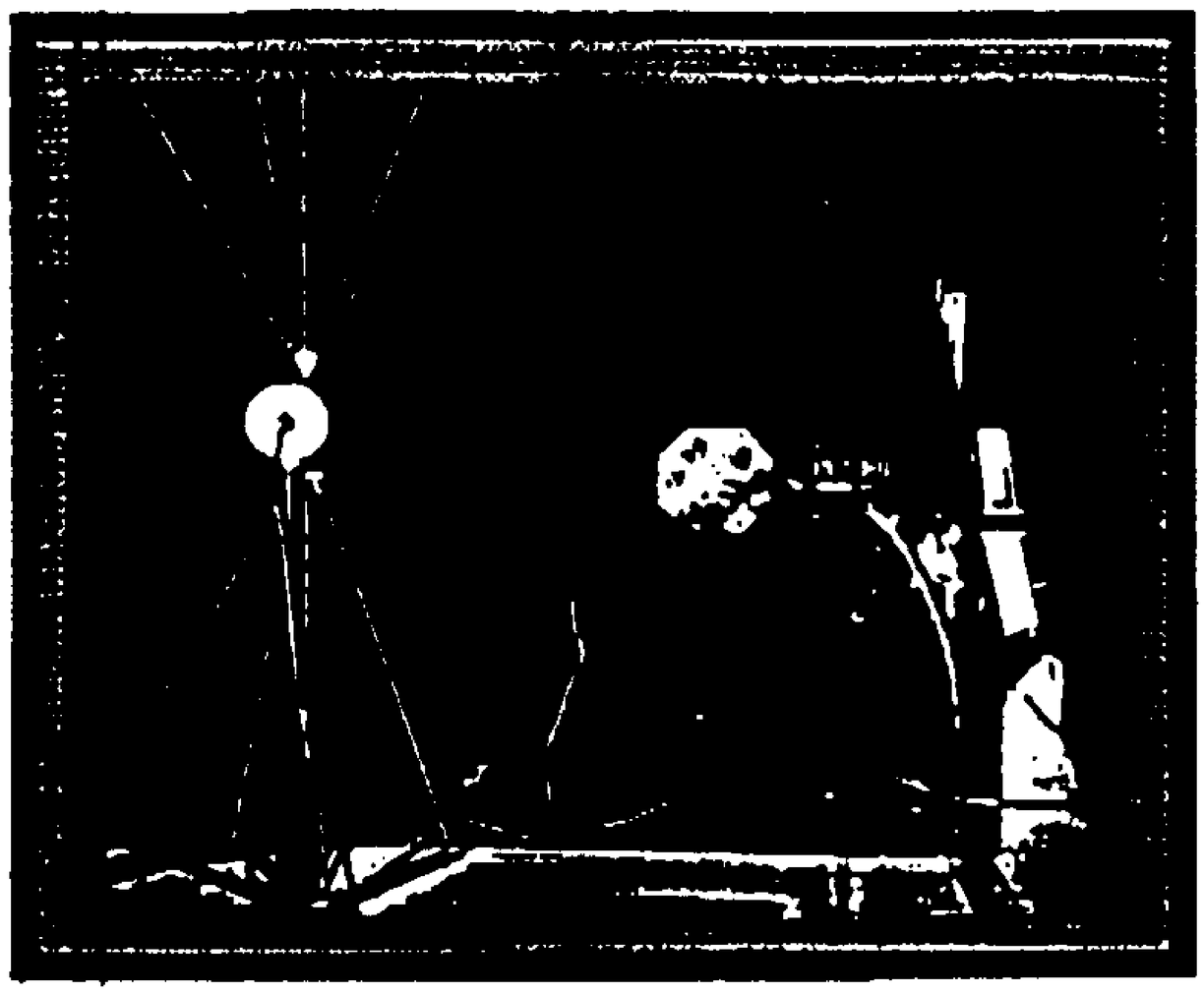

TEST SETUP	Radiated Emissions RE02
DATE	September 2, 1996
PROCEDURE	519821
UNIT UNDER TEST	NICMOS Instrument
SETUP BY	R. Hansen

Figure 30-1. Radiated emissions (RE02) test setup.

EATON DATA ACQUISITION SYSTEM

E.U.T. : NICMOS 517000-500 S/N001 DATE : Sep 1996
TEST PROCEDURE :S19821
COMMENTS :
TEST ENGINEER :RIK HANSEN

SCAN PARAMETERS TEST TITLE :ST-ICD-02E RE/NB(14KHz-10GHz)A:

Rvr	Start Freq	Stop Freq	Bandwidth	Atten	Detector	Transducer
17	14 kHz	30 MHz	1 kHz	0 dB	PEAK	8-33018 ACT R001
37	30 MHz	200 MHz	10 kHz	0 dB	PEAK	8-3108 PwrBicon
37	200 MHz	1 GHz	10 kHz	0 dB	PEAK	8-3101 Meter
67	1 GHz	10 GHz	100 kHz	0 dB	PEAK	8-3115/1-10

GLOBAL PARAMETERS

BROAD BAND CORRECTION: NO : SWEEP RATE: 4 Samples/Sec

LIMIT LINE : ST-ICD-02E RE NB

SCANS PER SEGMENT : 1

SEG 1 START TIME: 11:57:12 STOP TIME: 12:01:39
SEG 2 START TIME: 12:01:39 STOP TIME: 12:03:47
SEG 3 START TIME: 12:03:47 STOP TIME: 12:06:33
SEG 4 START TIME: 12:06:33 STOP TIME: 12:11:21

Maximum Scan Data : ST-ICD-02E RE/NB(14KHz-10GHz)A

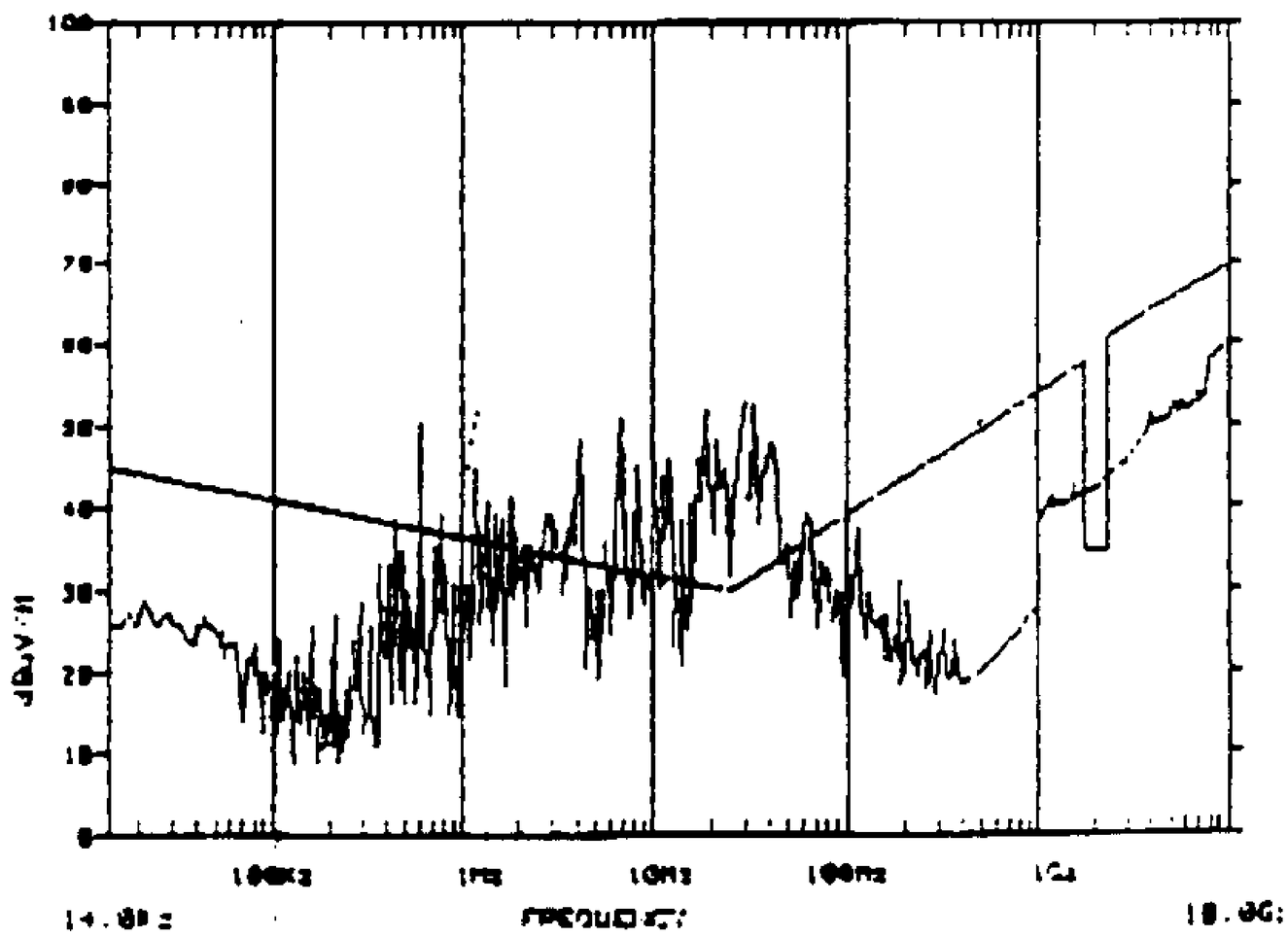

96-9-3

Figure 30-2. Radiated emissions (RE02) narrowband, 14kHz to 10 GHz.

EATON DATA ACQUISITION SYSTEM

E.U.T. : NICMOS S17000-E00 S/N001
TEST PROCEDURE :S19821
COMMENTS : Vert Pol AC [illegible]
TEST ENGINEER :RIK HANSEN

DATE 2 Sep 1996

SCAN PARAMETERS					TEST TITLE :ST-ICD-02E RE/BB(14KHz-1GHz)A:	
Avr	Start Freq	Stop Freq	Bandwidth	Atten	Detector	Transducer
17	14 kHz	30 MHz	10 kHz	0 dB	PEAK	B-33018 ACT ROO:
37	30 MHz	200 MHz	100 kHz	0 dB	PEAK	B-3100 PurBicon:
37	200 MHz	1 GHz	100 kHz	0 dB	PEAK	B-3101 Meter
67	1 GHz	10 GHz	1 MHz	0 dB	PEAK	B-3115/1-18

GLOBAL PARAMETERS

BROAD BAND CORRECTION: YES | SWEEP RATE: 4 Samples/Sec

LIMIT LINE : ST-ICD-02E RE BB

SCANS PER SEGMENT : 1

SEG 1 START TIME: 14:03:24 STOP TIME: 14:06:48
SEG 2 START TIME: 14:06:48 STOP TIME: 14:10:11
SEG 3 START TIME: 14:10:11 STOP TIME: 14:12:35
SEG 4 START TIME: 14:12:35 STOP TIME: 14:17:49

Maximum Scan Data : ST-ICD-02E RE/BB(14KHz-1GHz)A

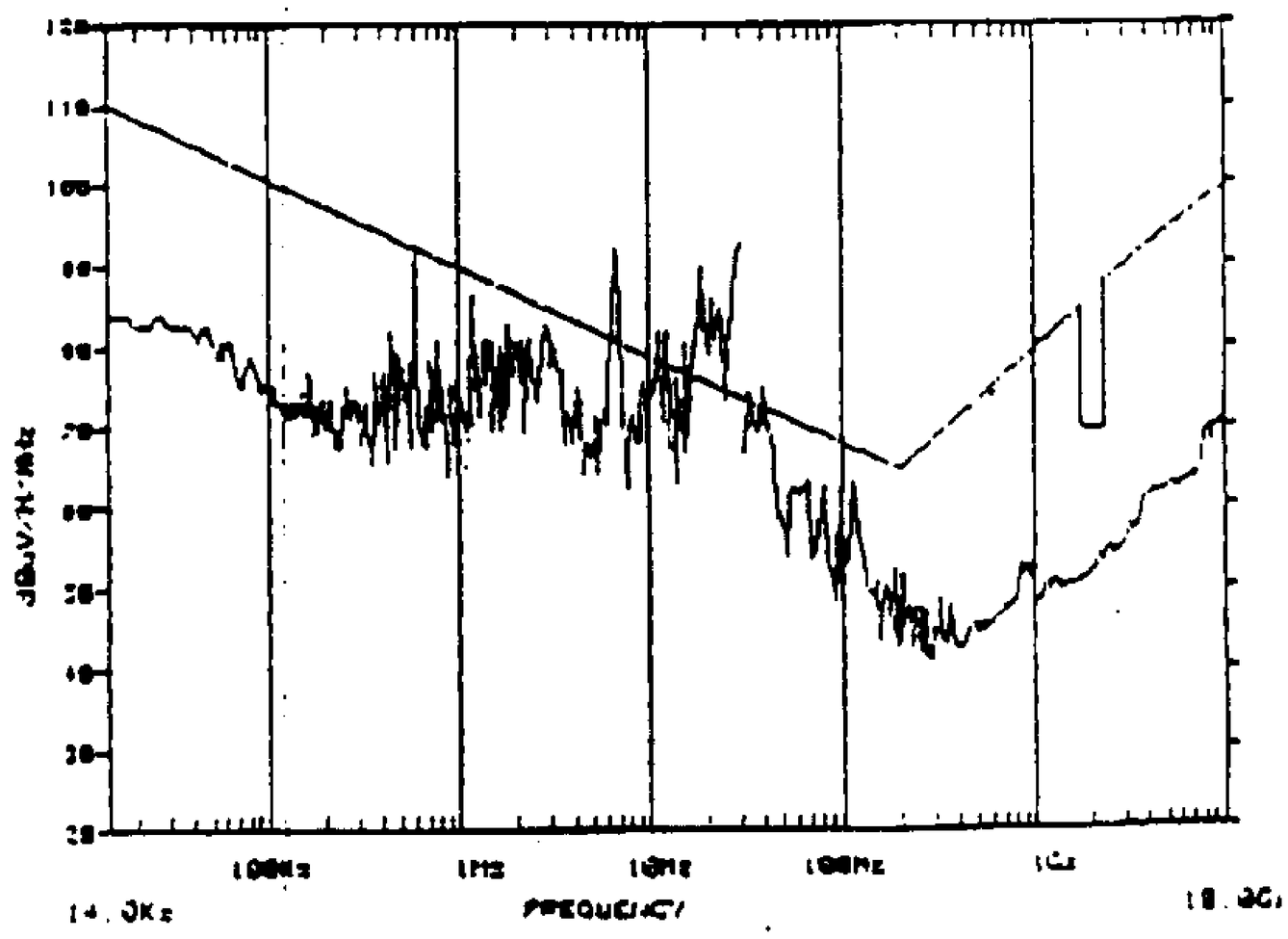

96-9-3

Figure 30-3. Radiated emissions (RE02) broadband, 14 kHz to 10 GHz.

EMI-R211

EATON DATA ACQUISITION SYSTEM

DATE 2 Sep 1996

E.U.T. : NICMOS S17000-500 S/N001
TEST PROCEDURE :S19821
COMMENTS : [illegible]
TEST ENGINEER :RIK HANSEN

SCAN PARAMETERS					TEST TITLE :ST-ICD-02E RE/NB(30-200MHz)HP	
Avr	Start Freq	Stop Freq	Bandwidth	Atten	Detector	Transducer
37	30 MHz	200 MHz	10 kHz	0 dB	PEAK	B-3108 PurBicon

GLOBAL PARAMETERS	
BROAD BAND CORRECTION: NO	SWEEP RATE: 1 Samples/Sec
LIMIT LINE	: ST-ICD-02E RE NB
SCANS PER SEGMENT	: 1

SEG 1 START TIME: 14:23:46 STOP TIME: 14:27:17

Maximum Scan Data : ST-ICD-02E RE/NB(30-200MHz)HP

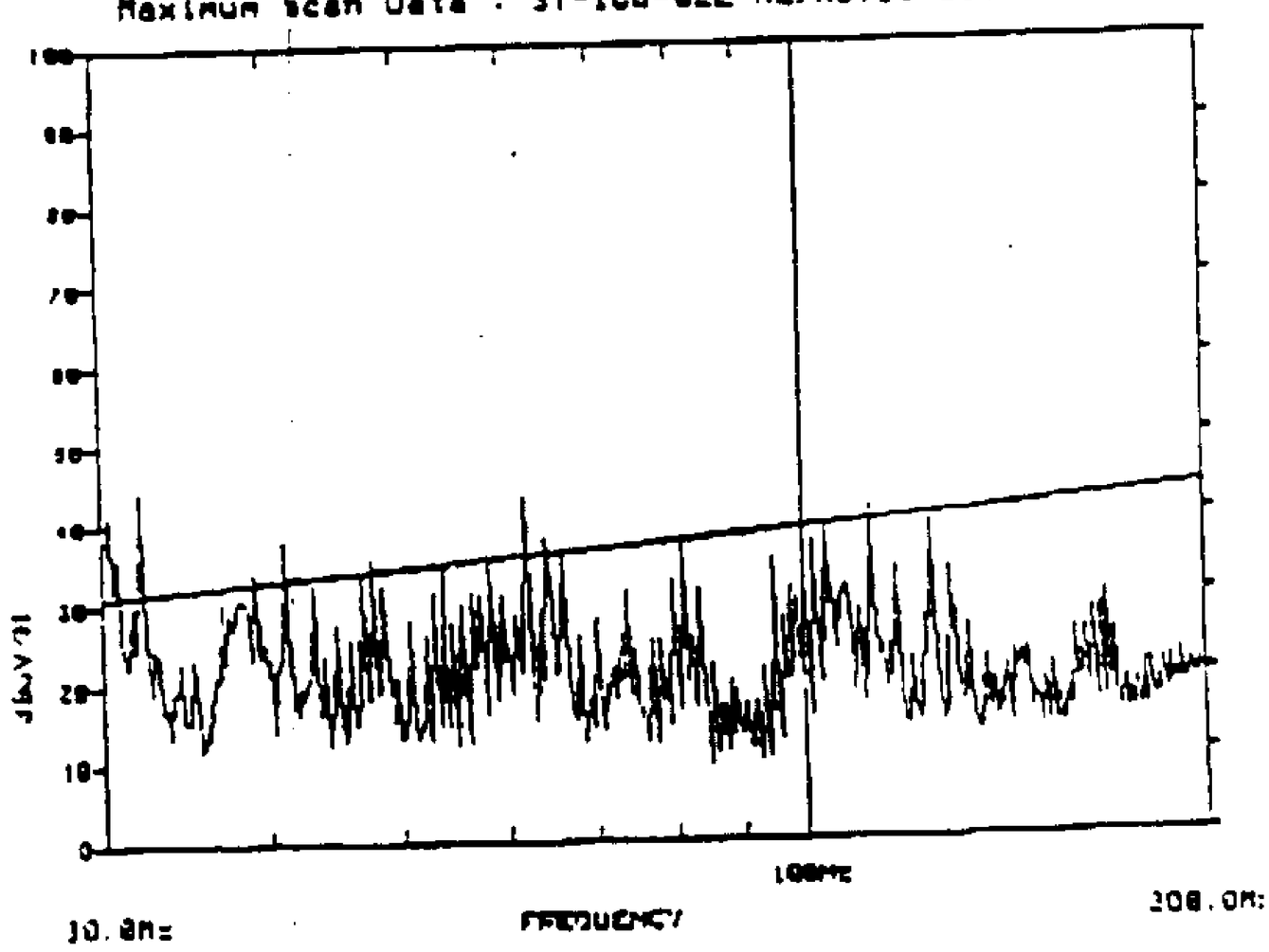

96.23

Figure 30-4. Radiated emissions (RE02) narrowband, 30 MHz to 200 MHz, horizontal polarization.

EMI-R211

EATON DATA ACQUISITION SYSTEM

E.U.T. : NICMOS 517000-500 S/N001
TEST PROCEDURE :S19821
COMMENTS : [illegible]
TEST ENGINEER :RIK HANSEN

DATE 2 Sep 1996

SCAN PARAMETERS					TEST TITLE :ST-ICD-02E RE/BB(30-200MHz)HP	
Rvr	Start Freq	Stop Freq	Bandwidth	Atten	Detector	Transducer
37	30 MHz	200 MHz	100 kHz	0 dB	PEAK	B-3108 PwrBicon

GLOBAL PARAMETERS
BROAD BAND CORRECTION: YES : SWEEP RATE: 4 Samples/Sec
LIMIT LINE : ST-ICD-02E RE BB
SCANS PER SEGMENT : 1

SEG 1 START TIME: 14:32:58 STOP TIME: 14:36:30

Maximum Scan Data : ST-ICD-02E RE/BB(30-200MHz)HP

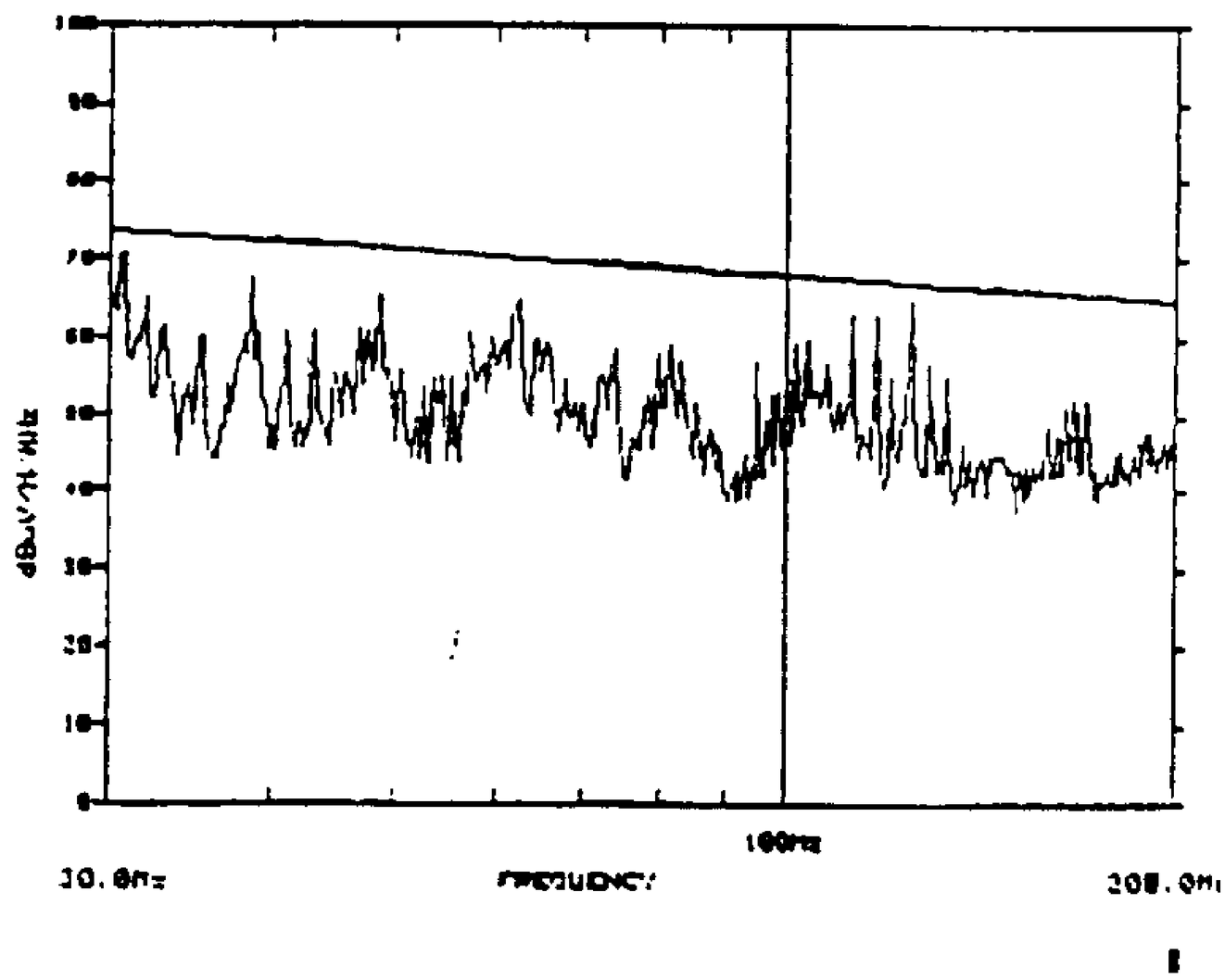

Figure 30-5. Radiated emissions (RE02) broadband, 30 MHz to 200 MHz, horizontal polarization.

(NEW PAGE CREATED BY IRN 112)

EMI-R211

EATON DATA ACQUISITION SYSTEM

E.U.T. : NICMOS S17000-500 S/N001 DATE 2 Sep 1996
TEST PROCEDURE :S19821
COMMENTS :HORIZONTAL POL.
TEST ENGINEER :RIK HANSEN

SCAN PARAMETERS					TEST TITLE :ST-ICD-02E RE/NB(1-10GHz)3115	
Avr	Start Freq	Stop Freq	Bandwidth	Atten	Detector	Transducer
67	1 GHz	10 GHz	100 kHz	0 dB	PEAK	B-3115/1-18

GLOBAL PARAMETERS

BROAD BAND CORRECTION: NO ; SWEEP RATE: 4 Samples/Sec

LIMIT LINE : ST-ICD-02E RE NB

SCANS PER SEGMENT : 1

SEG 1 START TIME: 14:43:25 STOP TIME: 14:48:35

Maximum Scan Data : ST-ICD-02E RE/NB(1-10GHz)3115

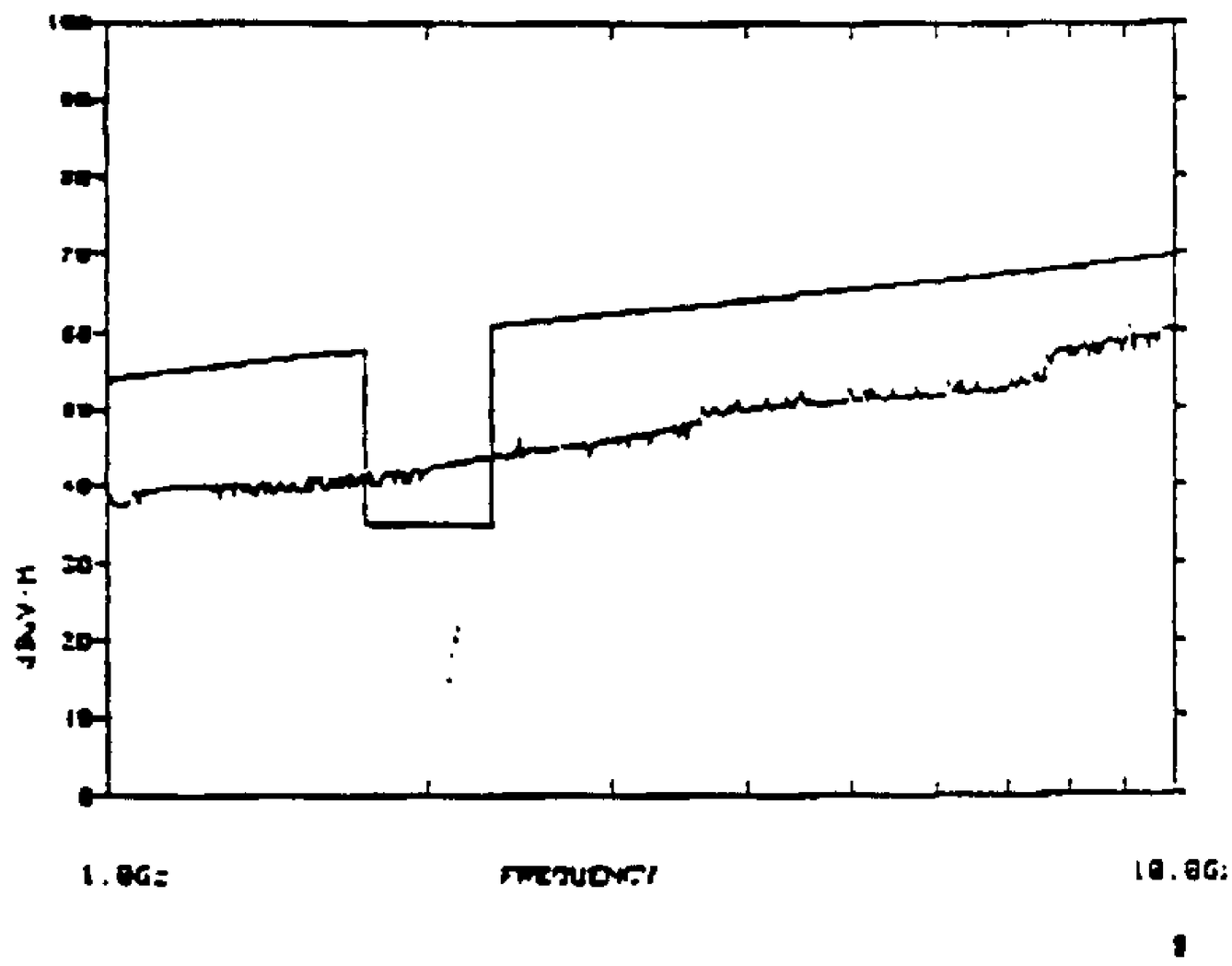

96-9-3

Figure 30-6. Radiated emissions (RE02) narrowband, 1 GHz to 10 GHz, horizontal polarization.

EATON DATA ACQUISITION SYSTEM

E.U.T. : NICMOS 517000-500 S/N001
TEST PROCEDURE :519821
COMMENTS :HORIZONTAL POL.
TEST ENGINEER :RIK HANSEN

DATE 2 Sep 1995

SCAN PARAMETERS					TEST TITLE :ST-ICD-02E RE/BB(1-10GHz)3115	
Rvr	Start Freq	Stop Freq	Bandwidth	Atten	Detector	Transducer
67	1 GHz	10 GHz	1 MHz	0 dB	PEAK	B-3115/1-18

GLOBAL PARAMETERS

BROAD BAND CORRECTION: YES SWEEP RATE: 4 Samples/Sec

LIMIT LINE : ST-ICD-02E RE BB

SCANS PER SEGMENT : 1

SEG 1 START TIME: 14:51:55 STOP TIME: 14:57:06

Maximum Scan Data : ST-ICD-02E RE/BB(1-10GHz)3115

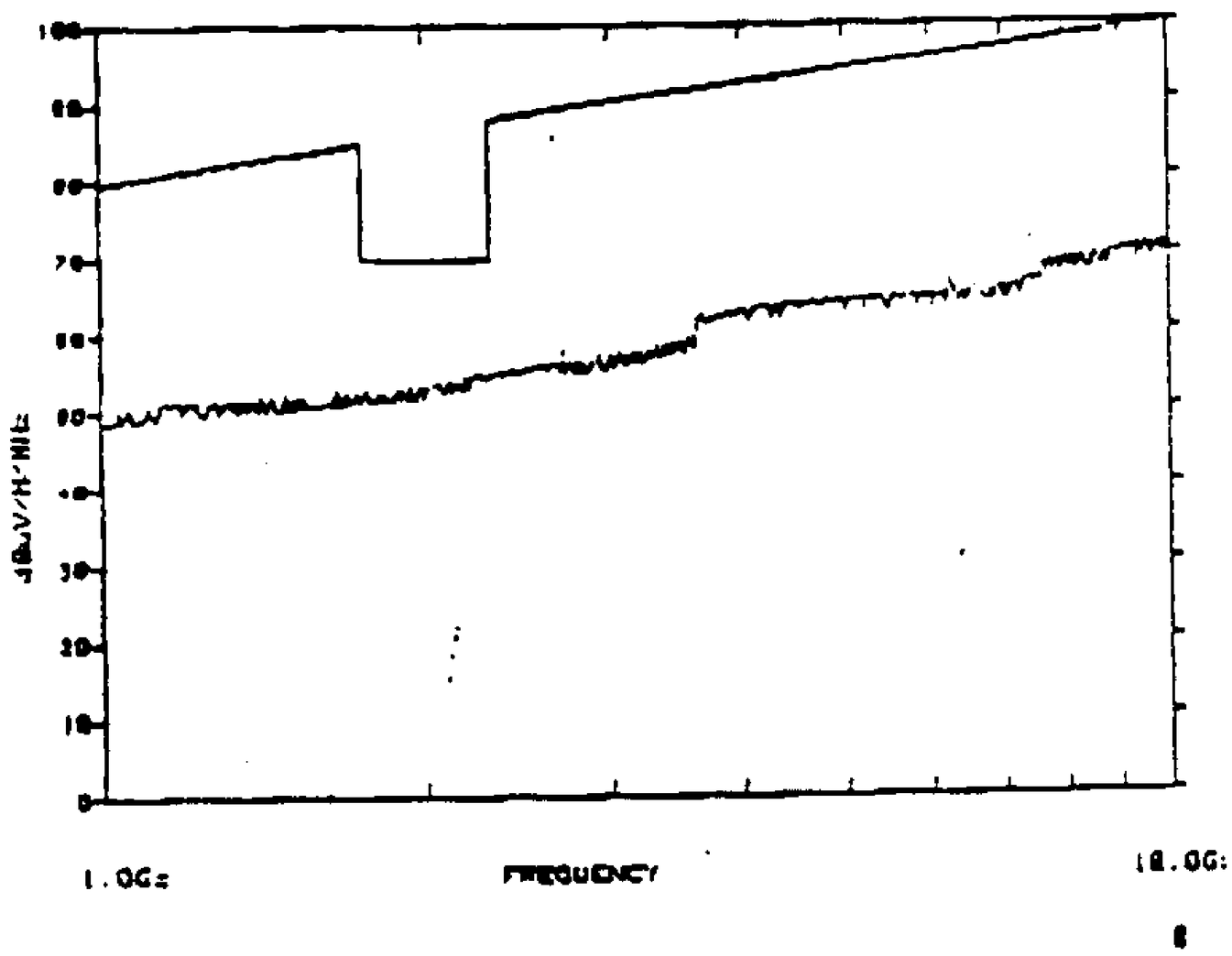

76.9.5

Figure 30-7. Radiated emissions (RE02) broadband, 1 GHz to 10 GHz, horizontal polarization.

EATON DATA ACQUISITION SYSTEM

E.U.T. : NICMOS S17000-500 S/N001 DATE 2 Sep 1996
TEST PROCEDURE :S19821
COMMENTS :VERTICAL POL.
TEST ENGINEER :RIK HANSEN

SCAN PARAMETERS					TEST TITLE :ST-ICD-02E RE S-BAND NB	
Rvr	Start Freq	Stop Freq	Bandwidth	Atten	Detector	Transducer
67	1.75 GHz	2.3 GHz	100 kHz	0 dB	PEAK	B-91889-2 HN3.5

GLOBAL PARAMETERS	
BROAD BAND CORRECTION: NO	SWEEP RATE: 4 Samples/Sec
LIMIT LINE	: ST-ICD-02E RE NB
SCANS PER SEGMENT	: 1

SEG 1 START TIME: 13:07:35 STOP TIME: 13:12:08

Maximum Scan Data : ST-ICD-02E RE S-BAND NB

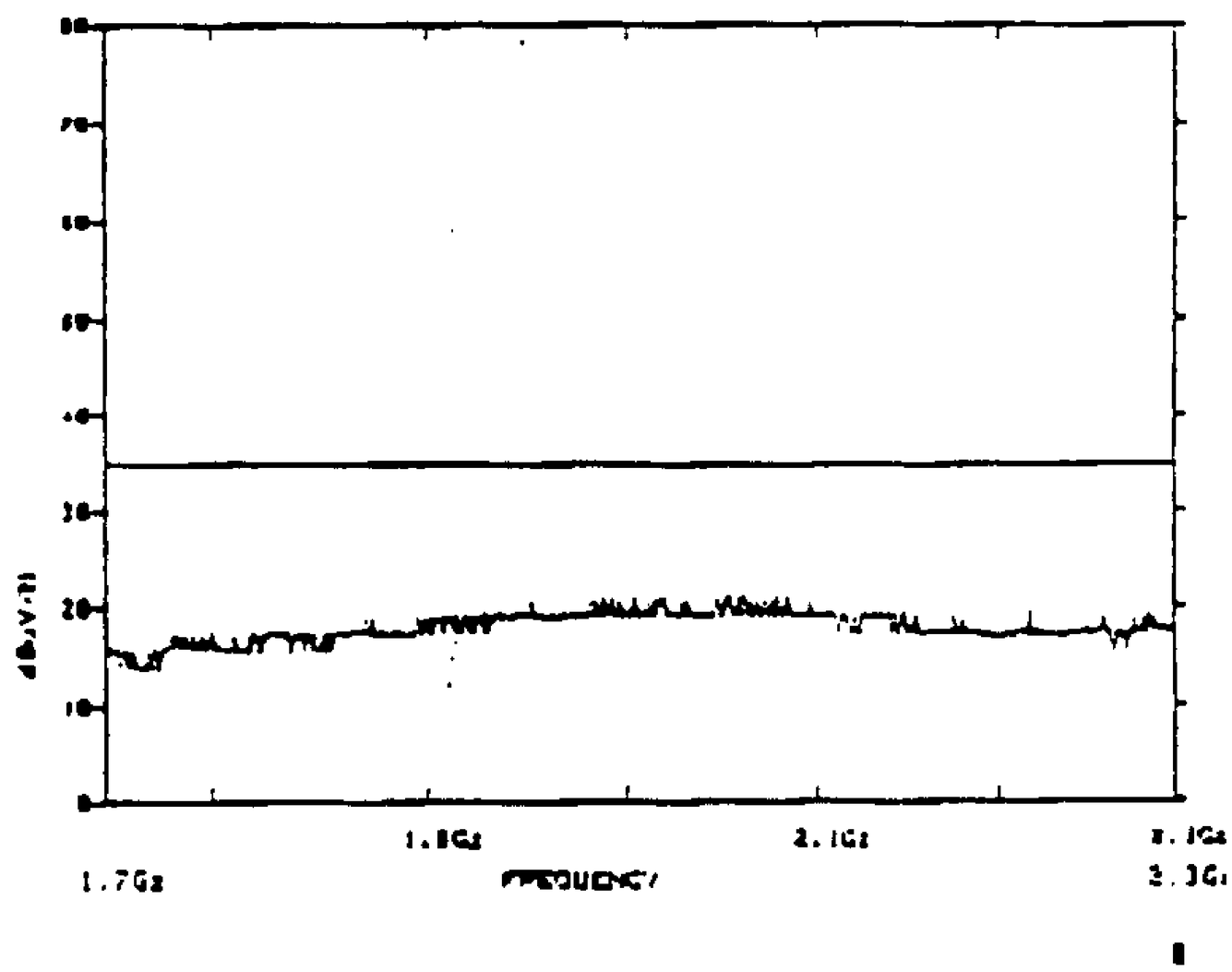

Figure 30-8. Radiated emissions (RE02) narrowband, 1.75 GHz to 2.3 GHz, vertical polarization.

EATON DATA ACQUISITION SYSTEM

E.U.T. : NICMOS S17000-500 S/N001
TEST PROCEDURE :S19821
COMMENTS :VERTICAL POL.
TEST ENGINEER :RIK HANSEN

DATE 2 Sep 1986

SCAN PARAMETERS					TEST TITLE :ST-ICD-02E RE S-BAND 88	
Avr	Start Freq	Stop Freq	Bandwidth	Atten	Detector	Transducer
67	1.75 GHz	2.3 GHz	MHz	0 dB	PEAK	B-91889-2 HN3.6

GLOBAL PARAMETERS

BROAD BAND CORRECTION: YES | SWEEP RATE: 4 Samples/Sec

LIMIT LINE : ST-ICD-02E RE 88

SCANS PER SEGMENT : 1

SEG | START TIME: 13:16:13 STOP TIME: 13:20:45

Maximum Scan Data : ST-ICD-02E RE S-BAND 88

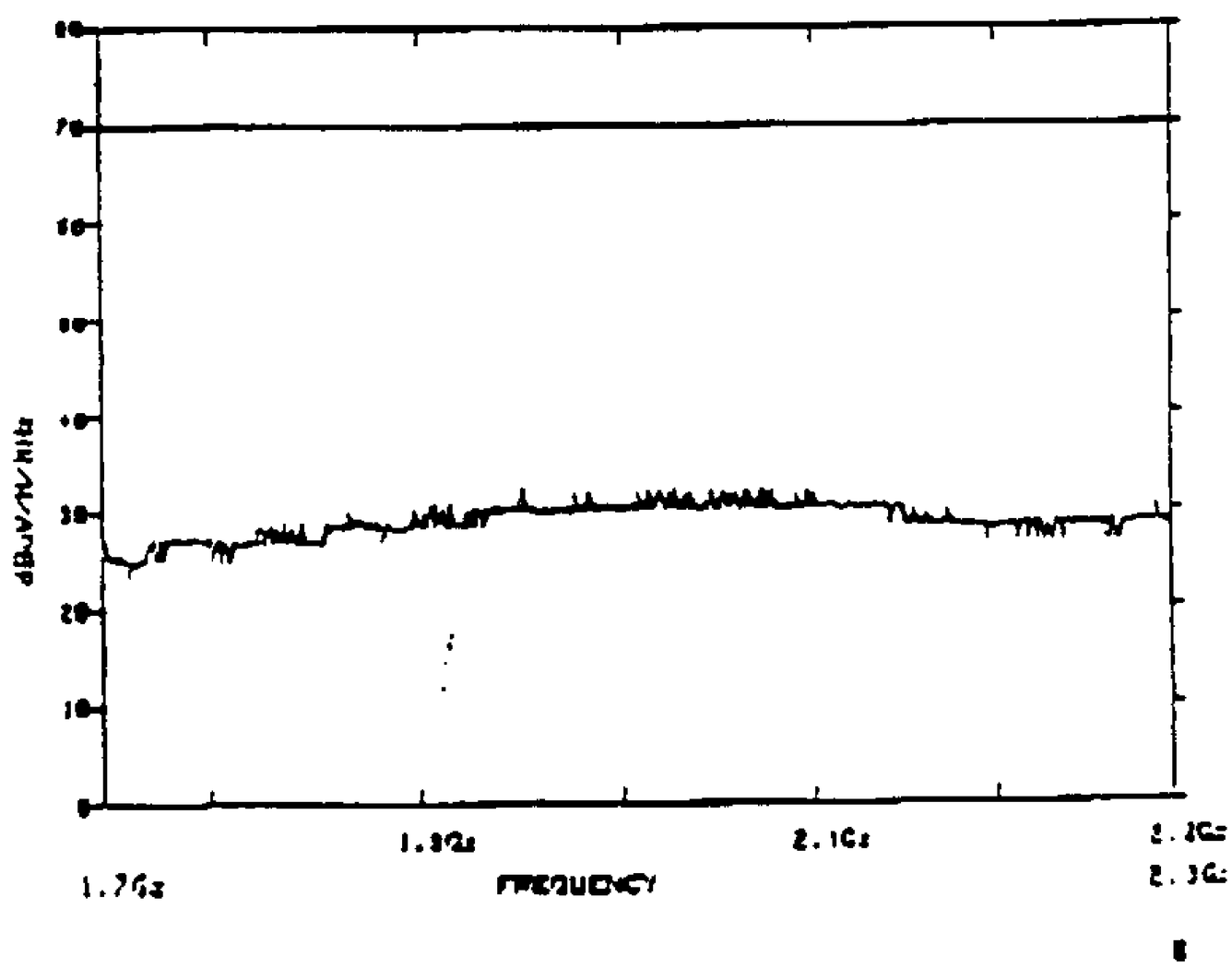

96-9-3

Figure 30-9. Radiated emissions (RE02) broadband, 1.75 GHz to 2.3 GHz, vertical polarization.

IRN 112
18 DECEMBER

EMI-R211

EATON DATA ACQUISITION SYSTEM

E.U.T. : NICMOS 517000-500 S/N001
TEST PROCEDURE :519821
COMMENTS :HORIZONTAL POL.
TEST ENGINEER :RIK HANSEN

DATE 2 Sep 1995

SCAN PARAMETERS					TEST TITLE :ST-ICD-02E RE S-BAND N8	
Rvr	Start Freq	Stop Freq	Bandwidth	Atten	Detector	Transducer
67	1.75 GHz	2.3 GHz	100 kHz	0 dB	PEAK	B-91889-2 HN3.6

GLOBAL PARAMETERS	
BROAD BAND CORRECTION: NO	SWEEP RATE: 4 Samples/Sec
LIMIT LINE	ST-ICD-02E RE N8
SCANS PER SEGMENT : 1	

SEG 1 START TIME: 13:34:23 STOP TIME: 13:38:54

Maximum Scan Data : ST-ICD-02E RE S-BAND N8

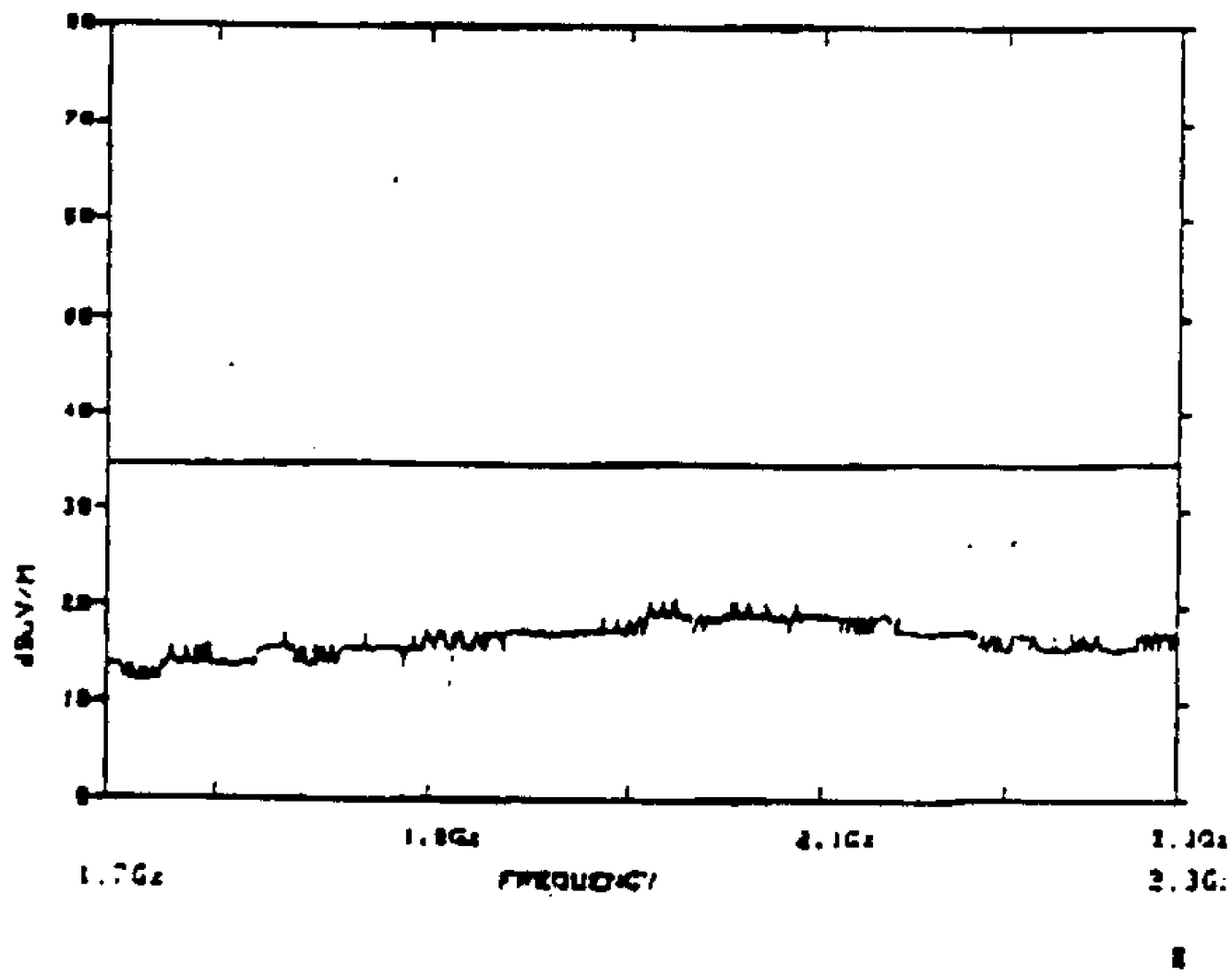

96-9-3

Figure 30-10. Radiated emissions (RE02) narrowband, 1.75 GHz to 2.3 GHz, horizontal polarization.

(NEW PAGE CREATED BY IRN 112)

EATON DATA ACQUISITION SYSTEM

E.U.T. : NICMOS S17000-500 S/N001
TEST PROCEDURE : S18821
COMMENTS : HORIZONTAL POL.
TEST ENGINEER : RIK HANSEN

DATE 2 Sep 1995

SCAN PARAMETERS					TEST TITLE : ST-ICD-02E RE S-BAND BB	
Avr	Start Freq	Stop Freq	Bandwidth	Atten	Detector	Transducer
67	1.75 GHz	2.3 GHz	1 MHz	0 dB	PEAK	8-91889-2 HN3.61

GLOBAL PARAMETERS	
BROAD BAND CORRECTION: YES	SWEEP RATE: 4 Samples/Sec
LIMIT LINE : ST-ICD-02E RE BB	
SCANS PER SEGMENT : 1	

SEG 1 START TIME: 13:28:11 STOP TIME: 13:30:43

Maximum Scan Data : ST-ICD-02E RE S-BAND BB

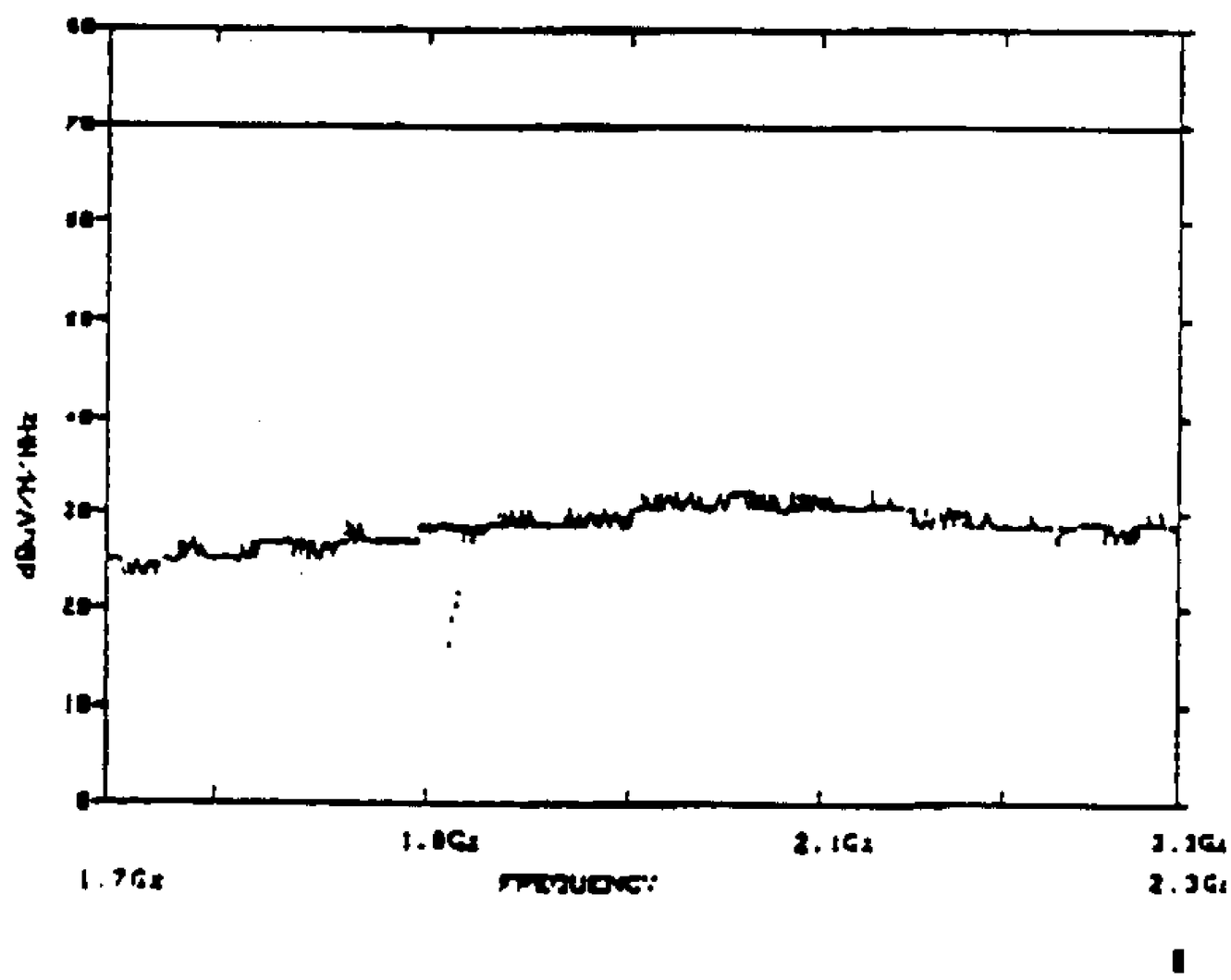

Figure 30-11. Radiated emissions (RE02) broadband, 1.75 GHz to 2.3 GHz, horizontal polarization.

EMI-R211

EATON DATA ACQUISITION SYSTEM

E.U.T. : NICMOS 517000-500 S/N001 DATE 2 Sep 1996
TEST PROCEDURE :519821
COMMENTS :AMBIENT PLOT/14kHz-200MHz ONLY
TEST ENGINEER :RIK HANSEN

SCAN PARAMETERS					TEST TITLE :ST-ICD-02E RE/NB(14KHz-1GHz)A
Avr	Start Freq	Stop Freq	Bandwidth	Atten	Detector	Transducer
17	14 kHz	30 MHz	1 kHz	0 dB	PEAK	B-33018 ACT R001
37	30 MHz	200 MHz	10 kHz	0 dB	PEAK	B-3100 PwrBicon
37	200 MHz	1 GHz	10 kHz	0 dB	PEAK	B-3101 Meter
67	1 GHz	10 GHz	100 kHz	0 dB	PEAK	B-3115/1-18

GLOBAL PARAMETERS

BROAD BAND CORRECTION: NO | SWEEP RATE: 4 Samples/Sec

LIMIT LINE : ST-ICD-02E RE NB

SCANS PER SEGMENT : 1

SEG 1 START TIME: 15:23:21 STOP TIME: 15:27:48
SEG 2 START TIME: 15:27:48 STOP TIME: 15:29:46

Maximum Scan Data : ST-ICD-02E RE/NB(14KHz-1GHz)A

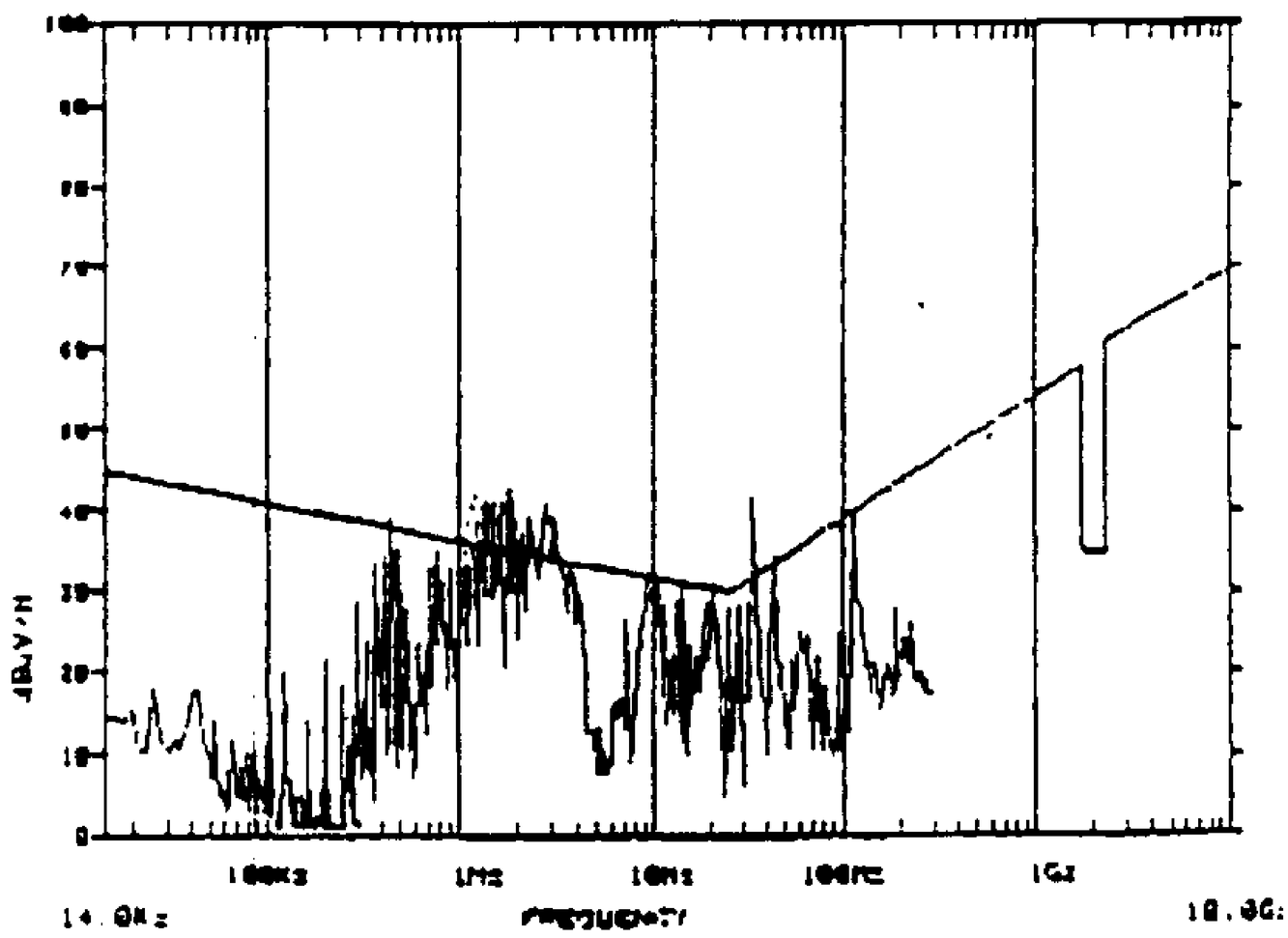

96-9-3

NICMOS OFF

Figure 30-12. Radiated emissions (RE02) narrowband, 14 kHz to 200 MHz, ambient plot with NICMOS off and GSE on.

EATON DATA ACQUISITION SYSTEM

E.U.T. : NICMOS S17000-500 S/N001
TEST PROCEDURE :S19821
COMMENTS :AMBIENT PLOT/GSE ON NICMOS OFF
TEST ENGINEER :RIK HANSEN

DATE 2 Sep 1996

SCAN PARAMETERS					TEST TITLE :ST-ICD-02E RE/N8(30-200MHz)HP	
Rvr	Start Freq	Stop Freq	Bandwidth	Atten	Detector	Transducer
37	30 MHz	200 MHz	10 kHz	0 dB	PEAK	8-3108 PurBicon

GLOBAL PARAMETERS	
BROAD BAND CORRECTION: NO	SWEEP RATE: 4 Samples/Sec
LIMIT LINE	ST-ICD-02E RE N8
SCANS PER SEGMENT	1

SEG 1 START TIME: 15:34:17 STOP TIME: 15:37:49

Maximum Scan Data : ST-ICD-02E RE/N8(30-200MHz)HP

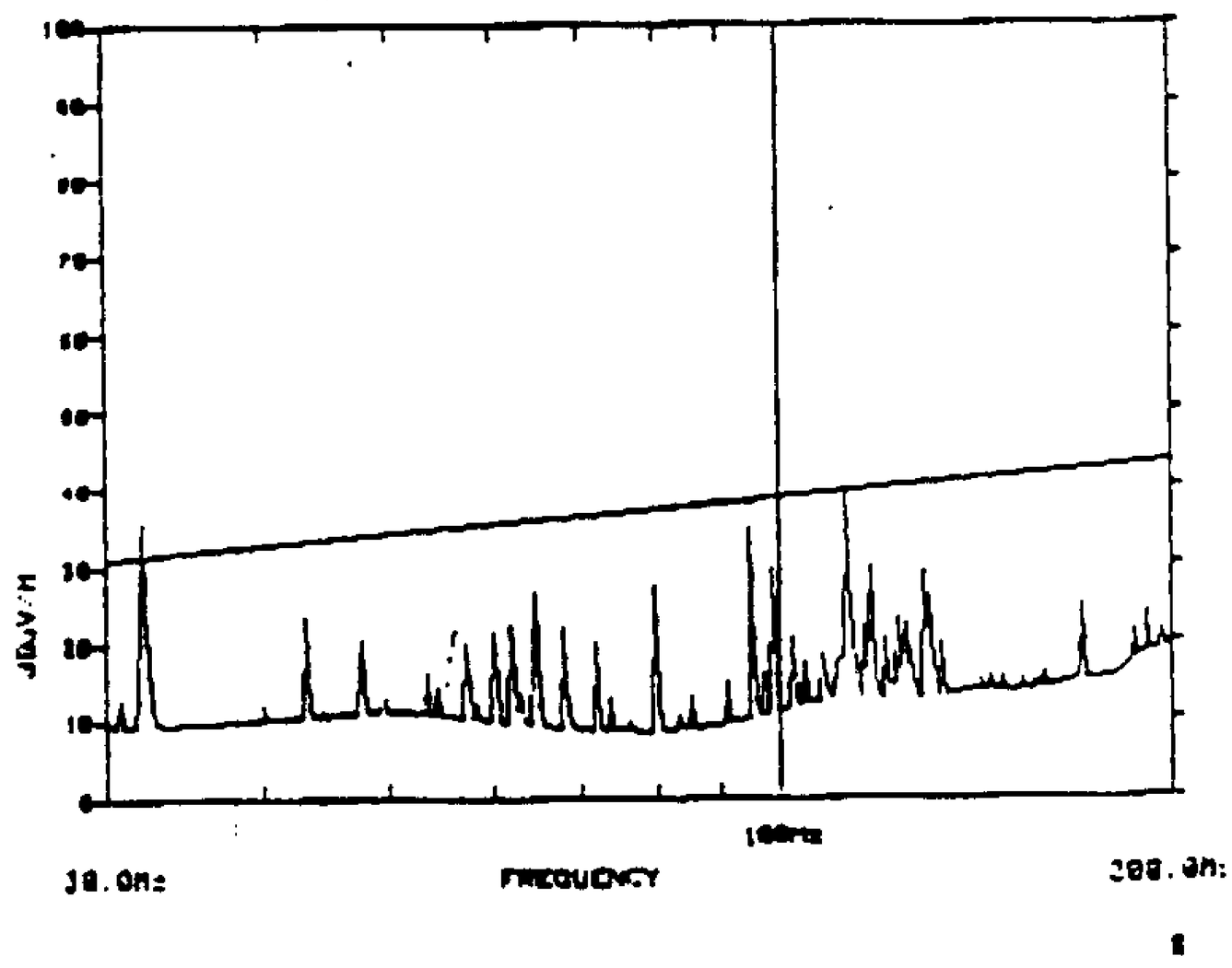

Figure 30-13. Radiated emissions (RE02) narrowband, 30 MHz to 200 MHz, ambient plot with NICMOS off and GSE on.

EMI-R211

EATON DATA ACQUISITION SYSTEM

E.U.T. : NICMOS S17000-500 S/N001 DATE 2 Sep 1995
TEST PROCEDURE :S19821
COMMENTS :GSE ON/RIU ON ONLY
TEST ENGINEER :RIK HANSEN

SCAN PARAMETERS TEST TITLE :ST-ICD-02E RE/NB(14KHz-1GHz)A1

Rvr	Start Freq	Stop Freq	Bandwidth	Atten	Detector	Transducer
17	14 kHz	30 MHz	1 kHz	0 dB	PEAK	8-33018 ACT ROD
37	30 MHz	200 MHz	10 kHz	0 dB	PEAK	8-3108 PurBicon
37	200 MHz	1 GHz	10 kHz	0 dB	PEAK	8-3101 Meter
67	1 GHz	18 GHz	100 kHz	0 dB	PEAK	8-3115/1-18

GLOBAL PARAMETERS

BROAD BAND CORRECTION: NO ; SWEEP RATE: 4 Samples/Sec

LIMIT LINE : ST-ICD-02E RE NB

SCANS PER SEGMENT : 1

SEG 1 START TIME: 15:50:53 STOP TIME: 15:56:20
SEG 2 START TIME: 15:55:20 STOP TIME: 15:57:12

Maximum Scan Data : ST-ICD-02E RE/NB(14KHz-18Hz)A

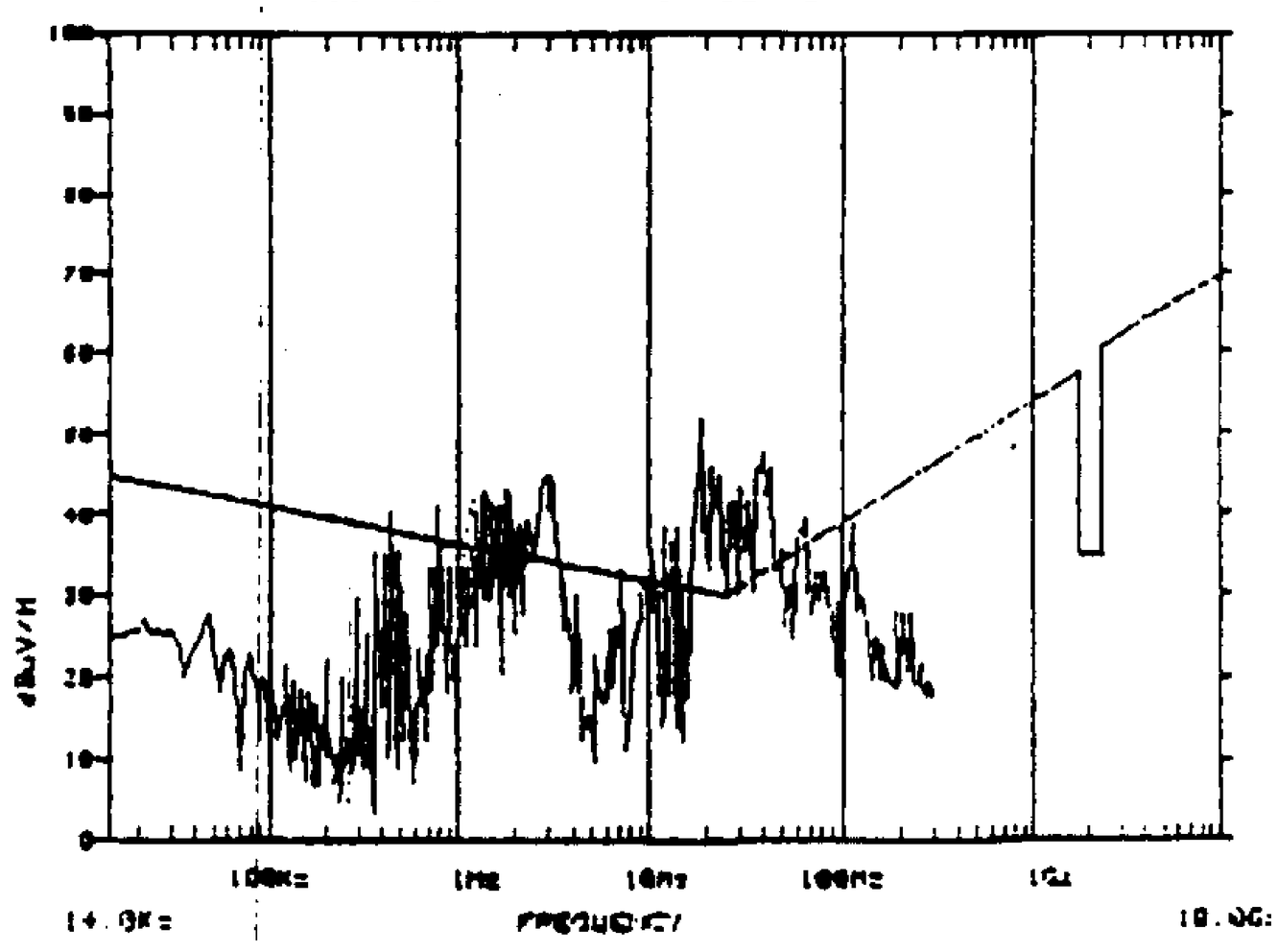

96-9-3

Figure 30-14. Radiated emissions (RE02) narrowband, 14 kHz to 200 MHz, with RIU on only.

EATON DATA ACQUISITION SYSTEM

E.U.T. : NICMOS 517000-500 S/N001
TEST PROCEDURE :519021
COMMENTS :GSE ON/RIU ON ONLY
TEST ENGINEER :RIK HANSEN

DATE 2 Sep 1996

SCAN PARAMETERS					TEST TITLE :ST-ICD-02E RE/NB(30-200MHz)HP	
Avr	Start Freq	Stop Freq	Bandwidth	Atten	Detector	Transducer
37	30 MHz	200 MHz	10 kHz	0 dB	PEAK	B-3108 PurBicon

GLOBAL PARAMETERS	
BROAD BAND CORRECTION: NO	SWEEP RATE: 4 Samples/Sec
LIMIT LINE : ST-ICD-02E RE NB	
SCANS PER SEGMENT : 1	

SEG | START TIME: 15:42:47 STOP TIME: 15:46:19

Maximum Scan Data : ST-ICD-02E RE/NB(30-200MHz)HP

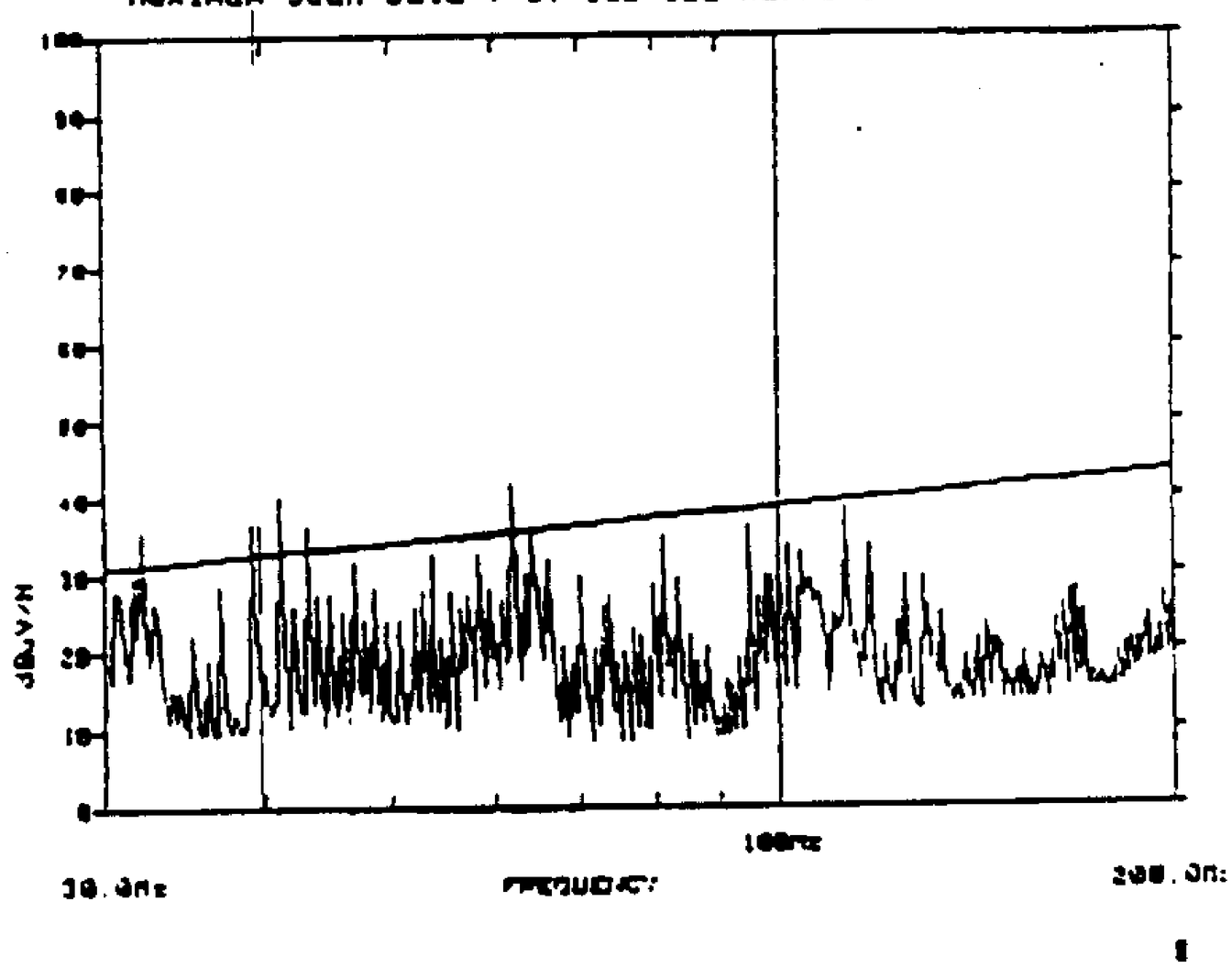

96-7-3

Figure 30-15. Radiated emissions (RE02) narrowband, 30 MHz to 200 MHz, horizontal polarization, with RIU on only.

(NEW PAGE CREATED BY IRN 112)

REQUEST FOR DEVIATI WAIVER (RFD/RFW)

1. DATE (YYMMDD) 96/09/23

2. PR NO.

3. CODAAC

Public reporting burden for this collection of information is estimated to average 2 hours per response, including the time for reviewing instructions, searching existing data sources, gathering and maintaining the data needed and completing and reviewing the collection of information. Send comments regarding this burden estimate or any other aspect of this collection of information, including suggestions for reducing this burden to Washington Headquarters Services, Directorate for Information Operations and Reports, 1215 Jefferson Davis Highway, Suite 1204, Arlington, VA 22202-4302, and to the Office of Information and Regulatory Affairs, Office of Management and Budget, Washington, D.C. 20503

PLEASE DO NOT RETURN YOUR COMPLETED FORM TO EITHER OF THESE ADDRESSES. RETURN COMPLETED FORM TO THE GOVERNMENT ISSUING CONTRACTING OFFICER FOR THE CONTRACT/PROCURING ACTIVITY NUMBER LISTED IN ITEM 2 OF THIS FORM.

4. ORIGINATOR

a. Ball Aerospace Technologies Corp

John F. Meadows

b. ADDRESS (Street, City, State, Zip code)
P.O. Box 1062
Boulder, CO 80306-1062

5. (X one)
O Deviation X Waiver

6. (X one)
O Minor X Major O Critical

7. DESIGNATION FOR DEVIATION/WAIVER

a. MODEL/TYPE	b. CAGE CODE	c. SYS. DESIG.	d. DEV/WAIVER NO.
NICMOS	13993	IN0048	W0013

8. BASELINE AFFECTED
O Functional O Allocated
X Product

9. OTHER SYSTEM CONFIGURATION ITEMS AFFECTED
O YES X NO

10. TITLE OF DEVIATION/WAIVER
Guide Block Metrology

11. CONTRACT NO. AND LINE ITEM
U of A Contract 172984

12. PROCURING CONTRACTING OFFICER
a. NAME (First, Middle Initial, Last) Linda Steen
b. CODE 286
c. TELEPHONE NO 520/621-6068

13. CONFIGURATION ITEM NOMENCLATURE
SI NICMOS

14. CLASSIFICATION OF DEFECT
a. CD NO
b. DEFECT NO.
c. DEFECT CLASSIFICATION
O MINOR X MAJOR O CRITICAL

15. NAME OF LOWEST PART/ASSEMBLY AFFECTED
SI NICMOS

16. PART NO. OR TYPE DESIGNATION
517000-500

17. EFFECTIVITY
0001

18. RECURRING DEVIATION/WAIVER
O YES X NO

19. EFFECT ON COST/PRICE
None if Approved

20. EFFECT ON DELIVERY SCHEDULE
None if Approved

21. EFFECT ON INTEGRATED LOGISTICS, SUPPORT, INTERFACE OR SOFTWARE
None

22. DESCRIPTION OF DEVIATION/WAIVER
Reference ~~DE-A16-0147~~ → HDAT memo A-16-ST-1127 (attached) paragraph 6.4.1 USE AS IS: The out of tolerance of forward guide block, AIMS point 316, and the guide strip, AIMS point 91, both exceed their allowed dimensions in the P2 direction. The minimum allowed gap between the guide block and the HST guard rail is 0.161. The guide blocks error reduces that gap to 0.135. (Reference Figure 4.3-13 of ST-ICD-02). IR1 IR1

23. NEED FOR DEVIATION/WAIVER
The guide strip has no adjustment capability. The guide blocks adjustment is limited to the P1 & P3 directions. There is no easy way to correct the error in the P2 direction. The out-of-tolerance conditions are deemed acceptable. The SI has fit into the HFMS. The SI will fit into HST.

24. CORRECTIVE ACTION TAKEN
Design will consider the guuide block adjustability during future SI design

25. SUBMITTING ACTIVITY

a. TYPED NAME (First, Middle Initial, Last)
John F. Meadows

b. TITLE
Project Engineer Quality Assurance

c. SIGNATURE

26. APPROVAL/DISAPPROVAL
a. RECOMMEND O APPROVAL O DISAPPROVAL

b. APPROVAL
X APPROVED O DISAPPROVED

c. GOVERNMENT ACTIVITY
Deputy Associate Director of Flight Projects for HST

d. TYPE NAME (First, Middle Initial, Last)
James S. Barrowman

e. SIGNATURE
James S. Barrowman

f. DATE SIGNED (YYMMDD)
961218

g. APPROVAL
X APPROVED O DISAPPROVED

h. GOVERNMENT ACTIVITY
Contracting Officer

i. TYPED NAME (First, Middle Initial, Last)
Gifford P. Moak

j. SIGNATURE
Gifford P. Moak

k. DATE SIGNED (YYMMDD)
970124

(NEW PAGE CREATED BY IRN 112)

ATTACHED
27 FEBRUARY
IRN 112
19 DECEMBER

HUGHES DANBURY OPTICAL SYSTEMS

MEMORANDUM

DATE: December 4, 1996 A16-ST-1127

Rev. A.

TO: J. Ryan

FROM: Philip Young Philip J. Young

RE: NICMOS Envelope, Latch, and Guide Block Measurements

cc: D. Connolly, L. Furey, J. Gay, J. P. Geithner, HDOS Document Control, R. Heidenreich, D. Jones, LMMS Document Control, H. Sampler, R. Thompson, N. Vadlamudi, P. Volmer

This memorandum contains the data report for the NICMOS envelope, latch, and guide block verification remeasurements which were made on 10/16/96. This document was originally issued as TE-A16-0147, but is being reissued as Revision A of engineering memorandum A16-ST-1127.

ST 1127 LE
27 FEBRUARY 1997
IRN 112
18 DECEMBER 1996

A16-ST-1127
Rev. A

Hubble Space Telescope

Flight Systems and Servicing (FS&S) Program

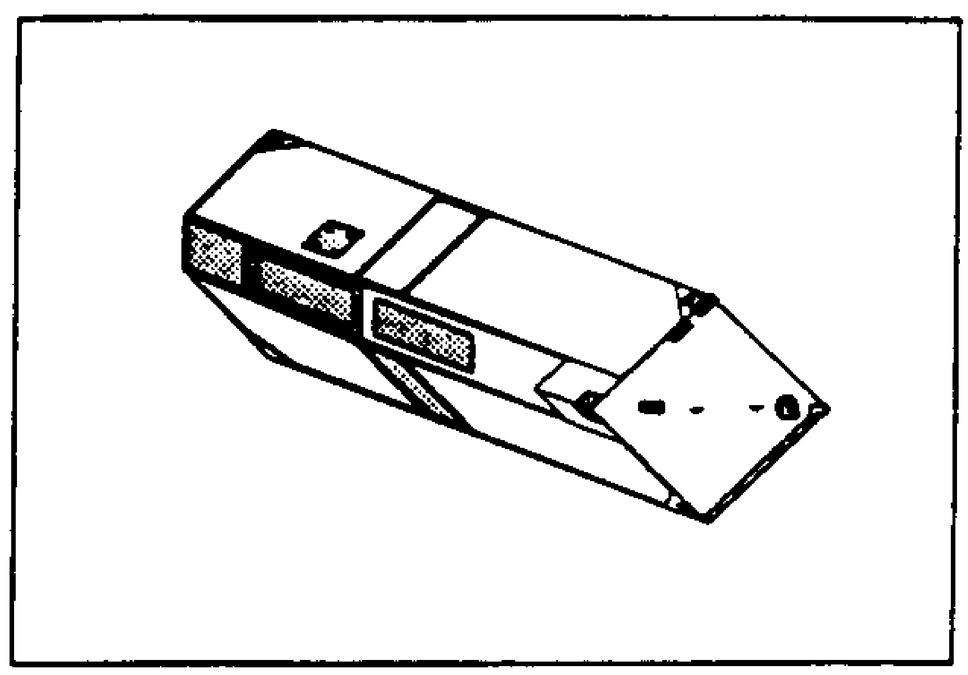

Near-Infrared Camera Multi-Object Spectrometer

Envelope, Latch, and Guide Block Measurements

12/4/96

HUGHES
Danbury Optical Systems

Report:

Near-Infrared Camera Multi-Object Spectrometer Envelope, Latch, and Guide Block Measurements

Publication Review:

Prepared By: Philip J. Young 12/4/96

Philip J. Young, HDOS — Date

Revision	Date	Affected Pages
Release	8/15/96	i-v, 1-24, A1-A15, B1-B40, C1-C16, D1-D3
Revision A	12/4/96	i-v, 1, 3, 5, 7, 12, 13, 25-30, E1-E3, F1-F9, G1-G3, H1-H2

(NEW PAGE CREATED BY IRN 112)
10.8-27

Table of Contents

SECTION	TITLE	PAGE
1.	SCOPE	1
2.	APPLICABLE DOCUMENTS	1
3.	TEST CONDITIONS, EQUIPMENT, AND FACILITIES	1
4.	TEST SEQUENCE AND SET-UP	1
5.	TEST PROCEDURES	2
6.	CONCLUSIONS AND DISCUSSIONS	2
6.1	DATA SUMMARY	2
6.2	FIT INTO HST	4
6.3	COMPARISON WITH FOS	12
6.4	OUT-OF-TOLERANCE ITEMS	14
6.4.1	GUIDE BLOCK AND GUIDE STRIP P2	14
6.4.2	GUIDE BLOCKS COPLANAR	15
6.4.3	GUIDE STRIP P3	15
6.4.4	-P1 END	15
6.4.5	ELECTRICAL CONNECTOR PANEL	18
6.4.6	GUIDE BLOCK P1	18
6.5	"B" LATCH PLACEMENT	18
7.	DATA ANALYSIS	20
7.1	LATCH TOOLS	20
7.2	ERROR ANALYSIS	22
7.3	ACKNOWLEDGMENTS	24
8.0	ENVELOPE REMEASUREMENTS, 10/16/96	25
8.1	SUMMARY AND CONCLUSIONS	25
8.2	GUIDE BLOCKS	29
8.3	-P2/-P3 ACCESS PORTS	29
8.4	PURGE COVER	29
8.5	LATCHES	30
APP A	RAW DATA	A-1
APP B	AS-RUN PROCEDURE	B-1
APP C	LATCH TOOL CALIBRATION	C-1
APP D	"B" LATCH TOOL TOLERANCE ANALYSIS	D-1
APP E	AIMS RAW DATA 10/16/96	E-1
APP F	AS-RUN DATA SHEETS	F-1
APP G	"B" LATCH TOOL CALIBRATION	G-1
APP H	PURGE COVER FIT OVER FPD HUB	H-1

List of Figures

Figure	Title	Page
6-1	P-COORDINATE SYSTEM DEFINITION	3
6-2	NICMOS -P2/-P3 SIDE VIEW	6
6-3	NICMOS PARTIAL VIEWS	7
6-4	NICMOS +P2/+P3 VIEW	8
6-5	HST/HFMS/NICMOS COMPARISON, AXIAL BAY 2	9
6-6	NICMOS GUIDE BLOCK INTERFACE WITH THE OTA GUIDE	11
6-7	COMPARISON OF NICMOS AND FOS DIMENSIONS	13
6-8	RAIL/BLOCK FIT WITH NON-PARALLEL GUIDE BLOCKS	16
6-9	GUIDE STRIP/RAIL OPERATION	17
6-10	HST AXIAL BAY 2 GUIDE RAIL ALIGNMENT	19
8-1	NICMOS PARTIAL VIEWS, 10/16/96	27
8-2	NICMOS -P2/-P3 SIDE VIEW, 10/16/96	28
7-1	LATCH TOOL CALIBRATION SUMMARY	21
7-2	LATCH TOOL INSTALLATION	23

(NEW PAGE CREATED BY IRN 112)
10.8-29

[illegible]
[illegible] FEBRUARY [illegible]
IRN 112
19 DECEMBER 1996

A16-ST-1127

List of Tables

Table	Title	Page
6-1	NICMOS ENVELOPE MEASUREMENTS	5
7-1	MEASUREMENT ERROR ANALYSIS	24
8-1	NICMOS ENVELOPE MEASUREMENTS, 10/16/96	26

ST-E-10-LE
27 FEBRUARY 1997
IRN: 112
19 DECEMBER 1996

A16-ST-1127

1. SCOPE

This report describes measurements of the Near-Infrared Camera Multi-Object Spectrometer (NICMOS) static envelope, latch, and guide block positions, and latch positions. The test article was the NICMOS Scientific Instrument (SI), built by Ball Aerospace, which will be flown on the second HST servicing mission to replace the FOS in axial bay 2. Measurements were made using the Analytic Industrial Measurement System III (AIMS III) in the SSDIF clean room on May 16 and 17, 1996. Additional measurements made on 10/16/96 are contained in Section 8. A

2. APPLICABLE DOCUMENTS

The tests were governed by the following plans and procedures:

a. "Procedures for the AIMS System Calibration Measurements for the NICMOS" Procedure number P-442-1335 (WOA #1678) (See Apendix A and B for data and procedure)

3. TEST CONDITIONS, EQUIPMENT, AND FACILITIES

Test conditions, equipment, and facilities used to conduct this test were in accordance with those specified in document a. of Section 2.

4. TEST SEQUENCE AND SET-UP

The test sequence and set-up were in accordance with the governing documents. All NICMOS envelope, latch, and guide Block requirements are defined in terms of the latch coordinate system which is defined by the centers of the A, B, and C latches. Special tools were used for the "B" and "C" latches to provide metrology targets for AIMS as they did for COSTAR and STAR. Both tools were calibrated to verify their accuracies as metrology references. See Appendix C for the calibration data. The test sequence was:

- Install the latch tools on the "B" and "C" latches.
- Set up and scale the AIMS theodolites.
- Measure latch targets.
- Transform AIMS default coordinate system into axial P-coordinates using the latch centers as references.
- Make all remaining measurements of targets in P-coordinates.

ST-[illegible]-[illegible]
[illegible] FEBRUARY [illegible]
IRN 112
19 DECEMBER 1996

A16-ST-1127

5. TEST PROCEDURES

All tests were performed in accordance with the general instructions in the test procedure. Minor procedural deviations were red-lined in the procedure and have no affect on the data reduction. It was expected that the "A" latch sphere would be used to define the latch center by direct measurement with AIMS. However, the latch surface was found to be too cloudy to use for theodolite metrology since it was a previously used latch. Therefore, a precision tooling ball was placed against the "A" latch sphere at several locations and its center measured with AIMS. Then, the AIMS sphere center location routine was used to define the sphere center. A double check of the accuracy of this technique was made by placing a target on the +P1 flat portion of the latch and measuring its location. This valued was compared to the +P1 value defined by the "A" latch drawing and found to agree to within 0.0015 inches.

6. CONCLUSIONS AND DISCUSSION

Figure 6-1 illustrates the relationship between the "A", "B", and "C latches and the axial P-coordinate system. Following measurement of the latch metrology targets with AIMS, the default coordinate system was translated to center on the "A" latch spherical bearing. The "C" latch tool provided a target which was 0.71875 inch from the latch hard plane and defined the center of the OTA half latch spherical bearing. The coordinate system was rotated such that the P2 and P3 coordinates of the measured "C" latch target were equal such that a 45 degree angle is defined between the two axes. Finally, the coordinate system was rotated such that the center of the "B" latch tool was located at P2 = P3 = 2.400. All remaining measurements in AIMS were made directly in the P-coordinate system which simplified near real time evaluation of the measurements.

6.1 DATA SUMMARY

There are four reasons for confidence of NICMOS fit into the HST:

1. The ICD envelope for NICMOS has been reduced from the original HST development envelope to provide more margin in critical areas.

2. NICMOS is smaller than FOS in one key area around the "A" latch which will provide needed margin.

3. NICMOS envelope, latches, and guide block/strip locations have been compared favorable with HST as-built data.

NICMOS has been installed successfully into the High Fidelity Mechanical Simulator (HFMS) which is indicative of HST fit.

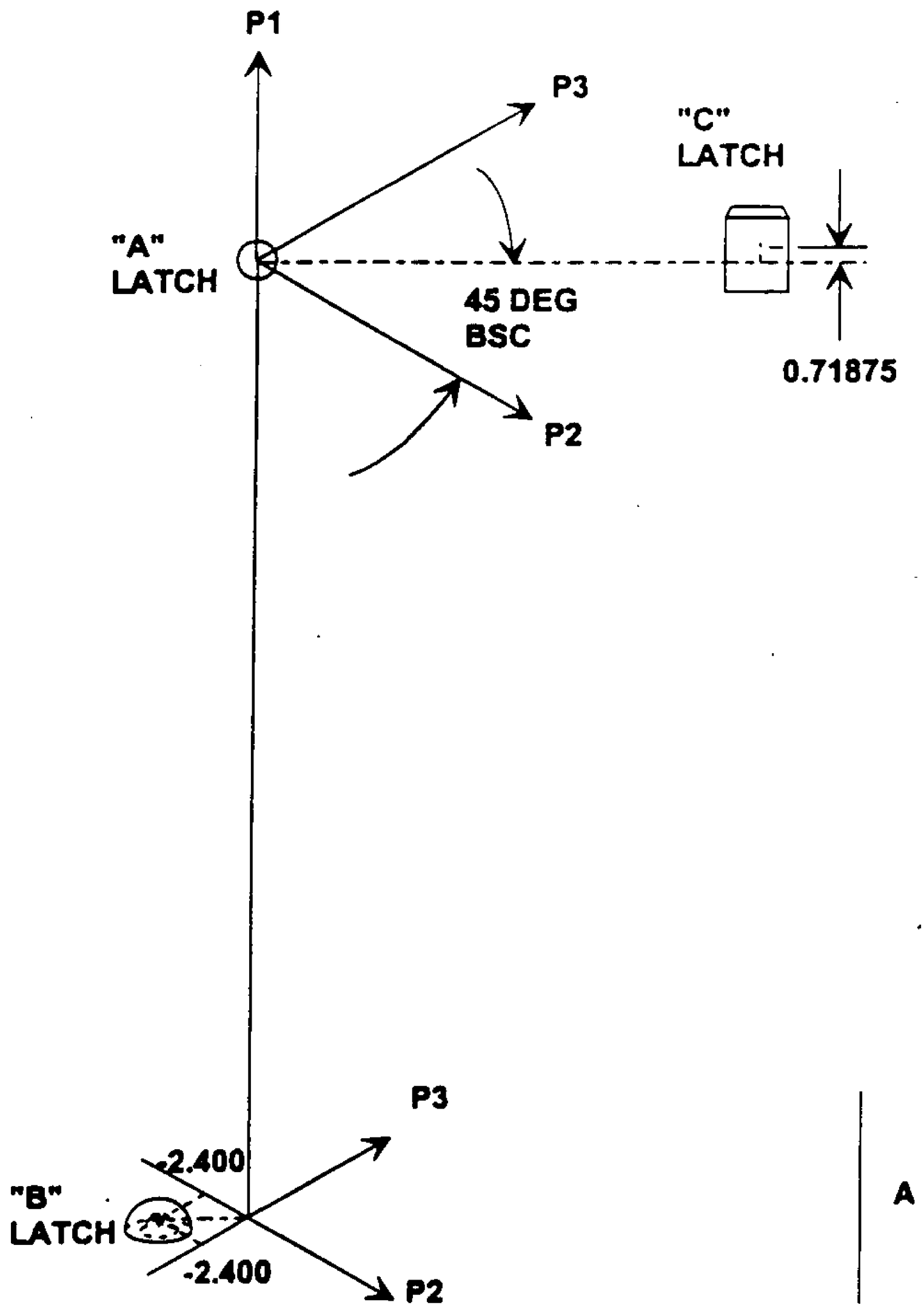

FIGURE 6-1 P-COORDINATE SYSTEM DEFINITION

3
REV A

IRN 112
A16-ST-1127

Even though no single item proves that NICMOS will fit into the HST, the combination of all items provides high confidence in the fit.

The NICMOS envelope, latch locations, and guide block/strip locations all were measured and found to be acceptable for HST operations. Table 6-1 summarizes the measurement results. The column headed by "No." refers to the AIMS data base number for that measurement point. These points can be identified on the figures which are listed under the column "FIG". The coordinates of the data points are listed in NICMOS P-coordinates which are defined by the latches. The applicable coordinates are boxed, and the remaining degrees of freedom are somewhat arbitrary and can not be correlated with any specific requirement. The table lists the requirement for each data point as defined in ICD-02, Section 4. The differences between the requirements and the actual measured points are contained in column "ERROR". All out-of-tolerance data points are boxed in the "ERROR" column. Finally, the report sections which discuss the out-of-tolerance items are listed under the column "SECTION".

Figures 6-2 through 6-4 pinpoint the measured target locations on the NICMOS instrument. Each AIMS data point is identified, its applicable dimension listed, and it is boxed if it is out-of-tolerance.

6.2 FIT INTO HST

Fit of NICMOS into the HST was investigated and is illustrated in Figure 6-5. This Figure contains measured data for the HFMS, as-built data of the HST from the HST metrology book (SMR-1092), the NICMOS ICD-02 requirements, and the as-built NICMOS dimensions. Specific NICMOS coordinate values apply when NICMOS is latched up in the OTA or HFMS.

Comparison to the HST is limited since there is little documentation of as-built dimensions of the HST without reviewing the build books. Even build book data would be partially applicable since such items as MLI, wires, and tie downs were never measured and do not show up on the as-built drawings. However, for the data which is available in the HST metrology book, NICMOS shows good clearances. In addition, comparison of clearances in the HFMS, while not conclusive, should be indicative of fit into the HST. Comparison of NICMOS to FOS in the next section increases confidence in the fit.

- The original set of axial instruments were built against an ICD which allowed the instruments to come too close to the OTA structure. For the first and second servicing missions, the allowed envelope was stepped back from the OTA in critical areas. Therefore, there is much less risk with installing an SI into the HST today. The following discussions provide confidence in the safety of NICMOS fit into HST:

IRN 112
27 FEBRUARY
IRN 112
8 DECEMBER

TABLE 6-1 NICMOS ENVELOPE MEASUREMENTS

5/16/96

DATA CORRECTED FOR TARGETS — ALL DATA IN INCHES — A16-ST-112

No.	FIG	NAME	P1	P2	P3	RQMT	ERROR	SECTION
83	6-3	GUIDE STRIP	-86.1155	-5.5023	-0.3261	-86.120 +/- .01	-0.0045	
87	6-3	GUIDE STRIP	-86.117	-5.5118	12.1116	-86.120 +/- .01	-0.003	
91	6-3	GUIDE STRIP	-85.8302	-5.9361	11.8841	-5.92 +/- .01	0.0161	6.4.1
95	6-3	GUIDE STRIP	-85.7508	-5.9232	-0.0179	-5.92 +/- .01	0.0032	
99	6-3	GUIDE STRIP	-86.0297	-5.8077	-0.5065	-0.55 +/- .01	-0.0435	6.4.3
109	6-2	+P1 SURFACE SKIN	-0.6427	-4.7881	0.3159	+0.4 MAX	1.0427	
113	6-2	+P1 SURFACE SKIN	-0.6368	0.4517	-4.7318	+0.4 MAX	1.0368	
139	6-2	-P3 SIDE SKIN	-1.8967	27.7919	-5.4498	-5.50 MAX	-0.0502	
143	6-2	-P3 SIDE SCREW	-1.6465	-2.76	-5.6288	-5.70 MAX	-0.0712	
146	6-2	-P3 SIDE SCREW	-2.8751	0.8629	-5.6415	-5.70 MAX	-0.0585	
151	6-2	-P3 SIDE SCREW	-84.1843	-3.5457	-5.6999	-5.70 MAX	-1.0E-04	
155	6-2	-P3 SIDE SKIN	-84.4942	27.7469	-5.4298	-5.70 MAX	-0.2702	
159	6-2	-P3 SIDE SKIN	-84.5589	2.4325	-5.4486	-5.70 MAX	-0.2514	
163	6-2	-P3 SIDE SKIN	-2.2617	1.9429	-5.4633	-5.70 MAX	-0.2367	
178	6-3	"B" LATCH CENTER FROM TRGTS	-85.7267	-2.3939	-2.401	-85.727	-0.0003	
182	6-3	"-P1 SIDE SKIN	-85.4426	27.7864	-4.7062	-86.1 -0, +.101	-0.6574	6.4.4
186	6-3	"-P1 SIDE SKIN	-85.4579	0.2554	-4.6486	-86.1 -0, +.101	-0.6421	6.4.4
190	6-3	"-P1 SIDE BOLT	-85.6392	4.7361	-1.2376	-86.1 -0, +.101	-0.4608	6.4.4
193	6-3	"-P1 SIDE SKIN	-85.4084	24.5794	20.4043	-86.1 -0, +.101	-0.6916	6.4.4
198	6-3	"-P1 SIDE BOLT	-85.6121	25.2018	10.5281	-86.1 -0, +.101	-0.4879	6.4.4
202	6-4	+P2 ELECT. CONNECT. BOLT	-55.7559	29.1519	18.8287	29.10 MAX	-0.0519	6.4.5
206	6-4	+P2 SIDE LIFT PAD	-81.7314	29.0617	-4.233	29.10 MAX	0.0383	
210	6-4	+P2 ELECT. CONNECT. BOLT	-58.9117	29.0871	20.4259	29.10 MAX	0.0129	
214	6-4	+P2 ELECT. CONNECT. BOLT	-55.7842	29.1547	16.3316	29.10 MAX	-0.0547	6.4.5
218	6-4	+P2 SIDE LIFT PAD	-2.9524	29.0722	23.3346	29.10 MAX	0.0278	
222	6-4	+P2 SIDE LIFT PAD	-2.1079	29.0815	1.9625	29.10 MAX	0.0185	
226	6-2	-P2 SIDE SCREW	-13.2861	-5.6371	0.8882	-5.70 MAX	-0.0629	
230	6-2	-P2 SIDE SCREW	-1.7279	-5.6347	-2.7606	-5.70 MAX	-0.0653	
234	6-2	-P2 SIDE SKIN	-2.2563	-5.4599	2.7141	-5.70 MAX	-0.2401	
238	6-2	-P2 SIDE SKIN	-2.0335	-5.4598	26.1933	-5.50 MAX	-0.0402	
242	6-2	-P2 SIDE SKIN	-84.7029	-5.4695	24.9624	-5.50 MAX	-0.0305	
246	6-2	-P2 SIDE SKIN	-84.0002	-5.4546	2.1582	-5.70 MAX	-0.2454	
250	6-2	-P2 SIDE SCREW	-84.3119	-5.6728	-4.7337	-5.70 MAX	-0.0272	
271	6-3	PURGE COVER	0.3803	-2.0673	-3.1602	+0.4 MAX	0.0197	
272	6-3	PURGE COVER	0.3799	-4.7345	-4.8758	+0.4 MAX	0.0201	
273	6-3	PURGE COVER	0.3791	-3.2607	-2.2602	+0.4 MAX	0.0209	
274	6-3	PURGE COVER	0.3268	-1.7154	-3.4756	-5.70 MAX	OK	
279	6-3	PURGE COVER	0.2661	-5.3727	-3.6335	-5.70 MAX	OK	
280	6-3	PURGE COVER	0.3315	-3.3978	-1.5951	-5.70 MAX	OK	
283	6-3	PURGE COVER	0.1258	-3.8635	-1.7029	+0.4 MAX	0.2742	
284	6-3	PURGE LINE CONNECTOR	0.0772	-3.7602	-0.4982	+0.4 MAX	0.3228	
285	6-3	PURGE LINE	-0.3395	-3.8901	2.4593	+0.4 MAX	0.7395	
294	6-3	PURGE COVER	0.2755	-4.1098	-5.4677	-5.70 MAX	OK	
297	6-3	PURGE COVER	0.2217	-5.29	-4.9208	-5.70 MAX	OK	
300	6-3	PURGE COVER	0.2577	-5.4169	-3.7528	-5.70 MAX	OK	
304	6-2	FORWARD GUIDE BLOCK	0.6586	29.2642	1.3105	0.645 +/- .005	-0.0136	6.4.6
305	6-2	FORWARD GUIDE BLOCK	0.6529	29.4298	-2.9719	0.645 +/- .005	-0.0079	6.4.6
308	6-2	FORWARD GUIDE BLOCK	0.078	29.4928	-5.5945	-5.595 +/- 0.005	-0.0005	
310	6-2	AFT GUIDE BLOCK	0.5912	29.3655	15.566	15.5705 +0, -.03	0.0045	
311	6-2	AFT GUIDE BLOCK	0.6324	29.255	11.5024	0.645 +/- .005	0.0126	6.4.6
312	6-2	AFT GUIDE BLOCK	0.6267	29.3011	14.7416	0.645 +/- .005	0.0183	6.4.6
313	6-2	AFT GUIDE BLOCK	0.4676	29.815	12.541	29.812 +/- 0.005	-0.003	
314	6-2	FORWARD GUIDE BLOCK	0.1721	29.8201	0.4704	29.812 +/- 0.005	-0.0081	6.4.2
315	6-2	FORWARD GUIDE BLOCK	0.2618	29.8414	-3.8849	29.812 +/- 0.005	-0.0294	6.4.1, 6.4.2

NOTE - BOXED ITEMS IN "ERROR" COLUMN OUT OF TOLERANCE

5
REV A

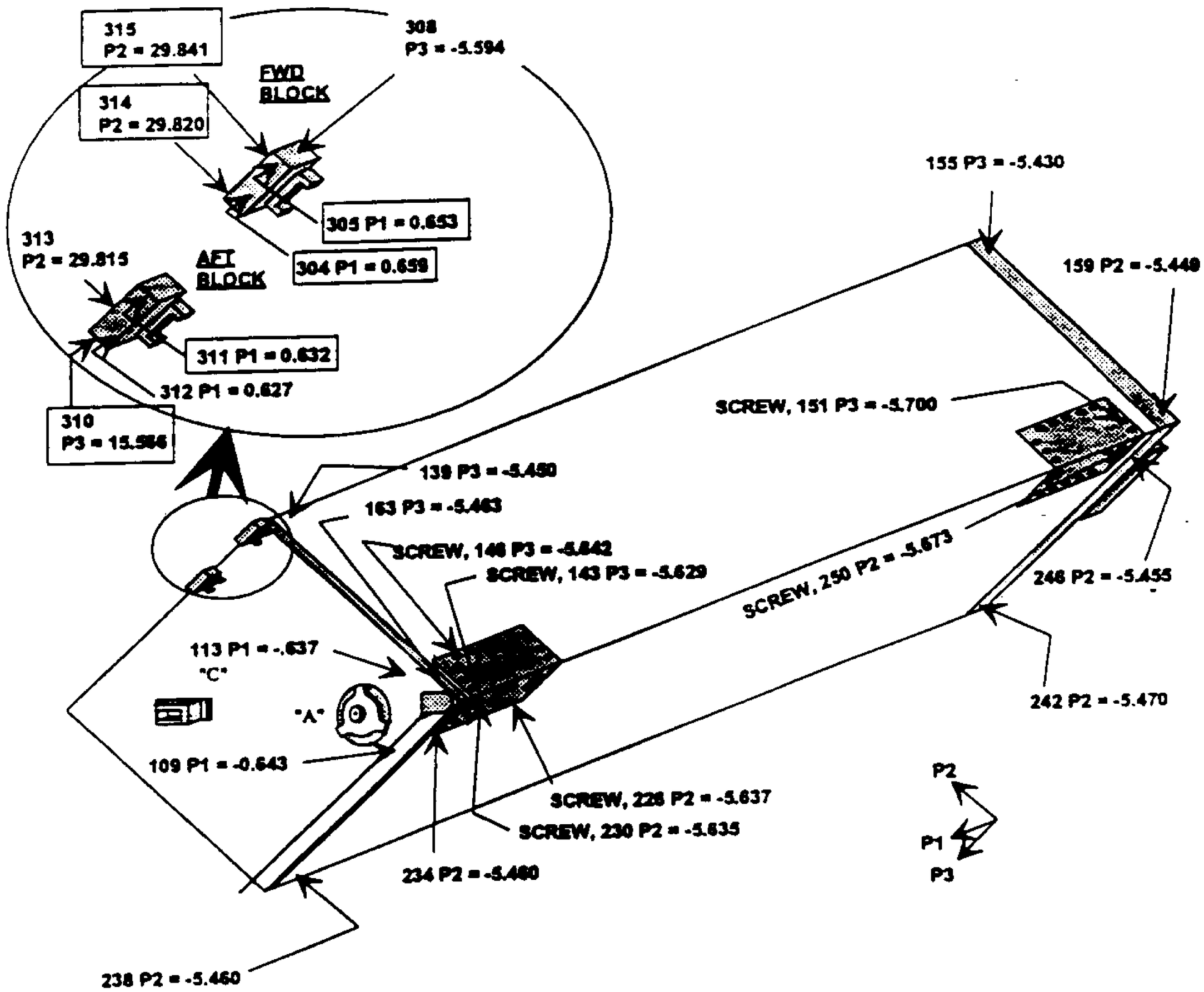

FIGURE 6-2 NICMOS -P2/-P3 SIDE VIEW

A16-ST-11

A

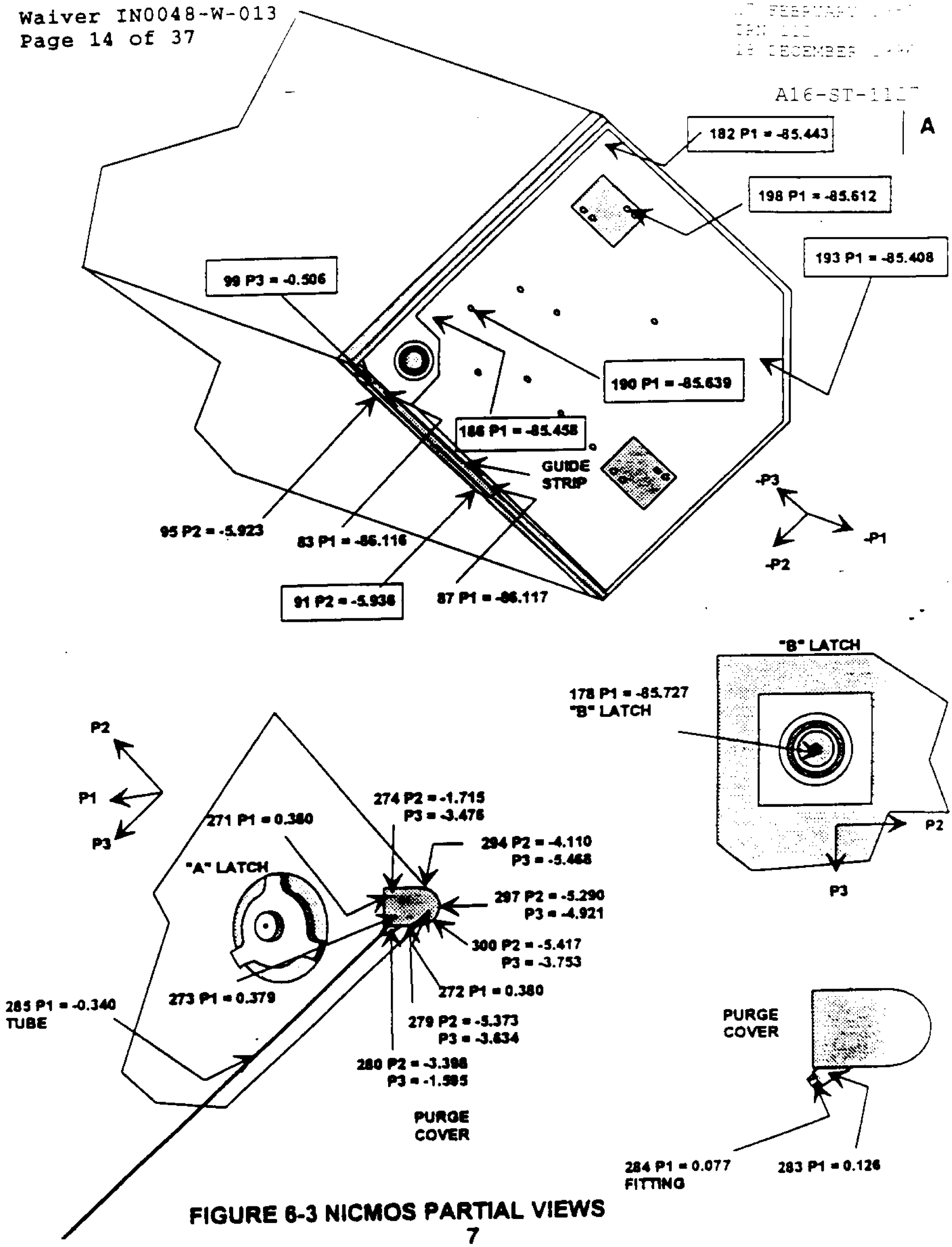

FIGURE 6-3 NICMOS PARTIAL VIEWS
7
REV A

(NEW PAGE CREATED BY IRN 112)

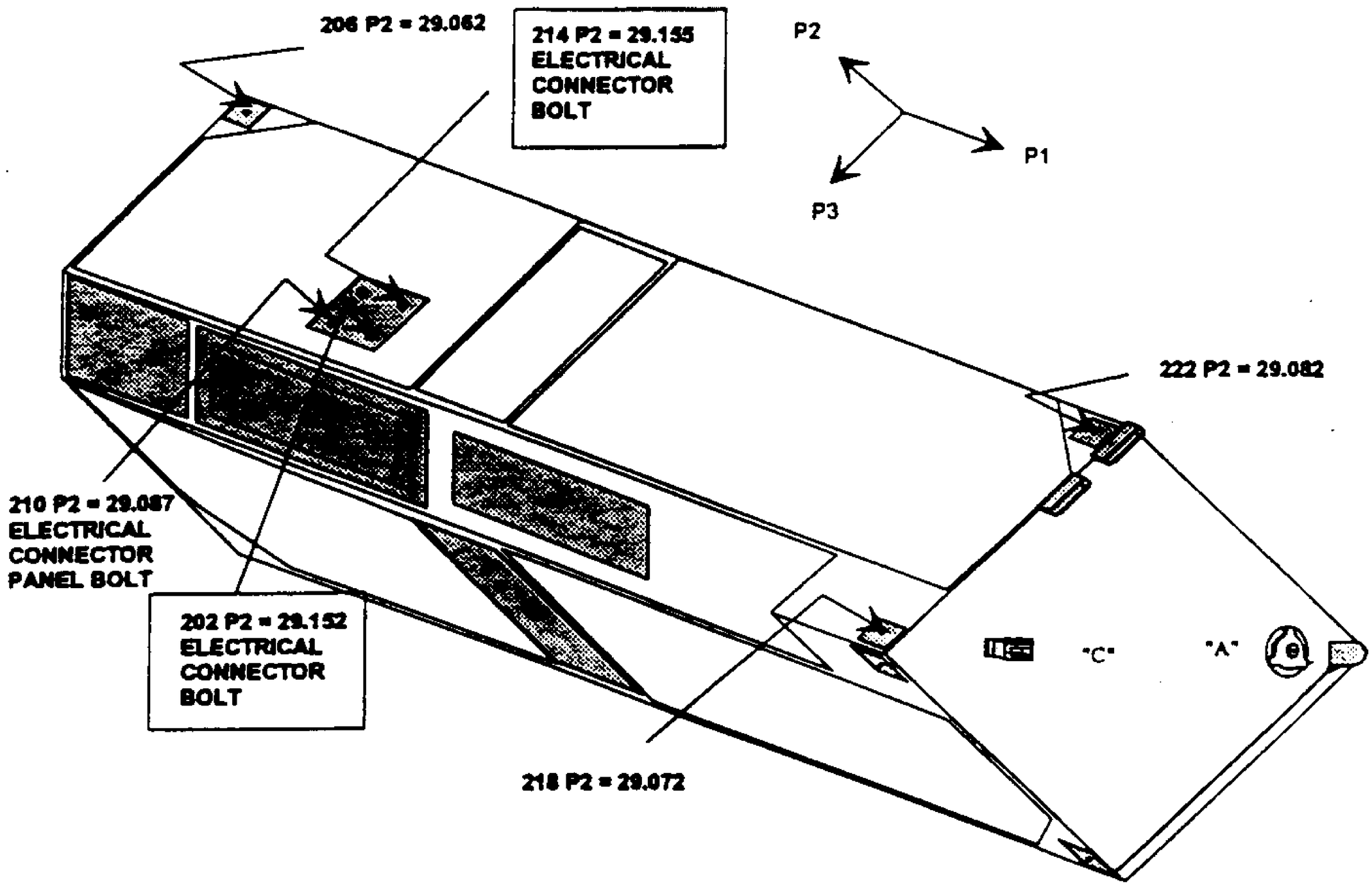

FIGURE 6-4 NICMOS +P2/+P3 VIEW

IRN 112
18 DECEMBER

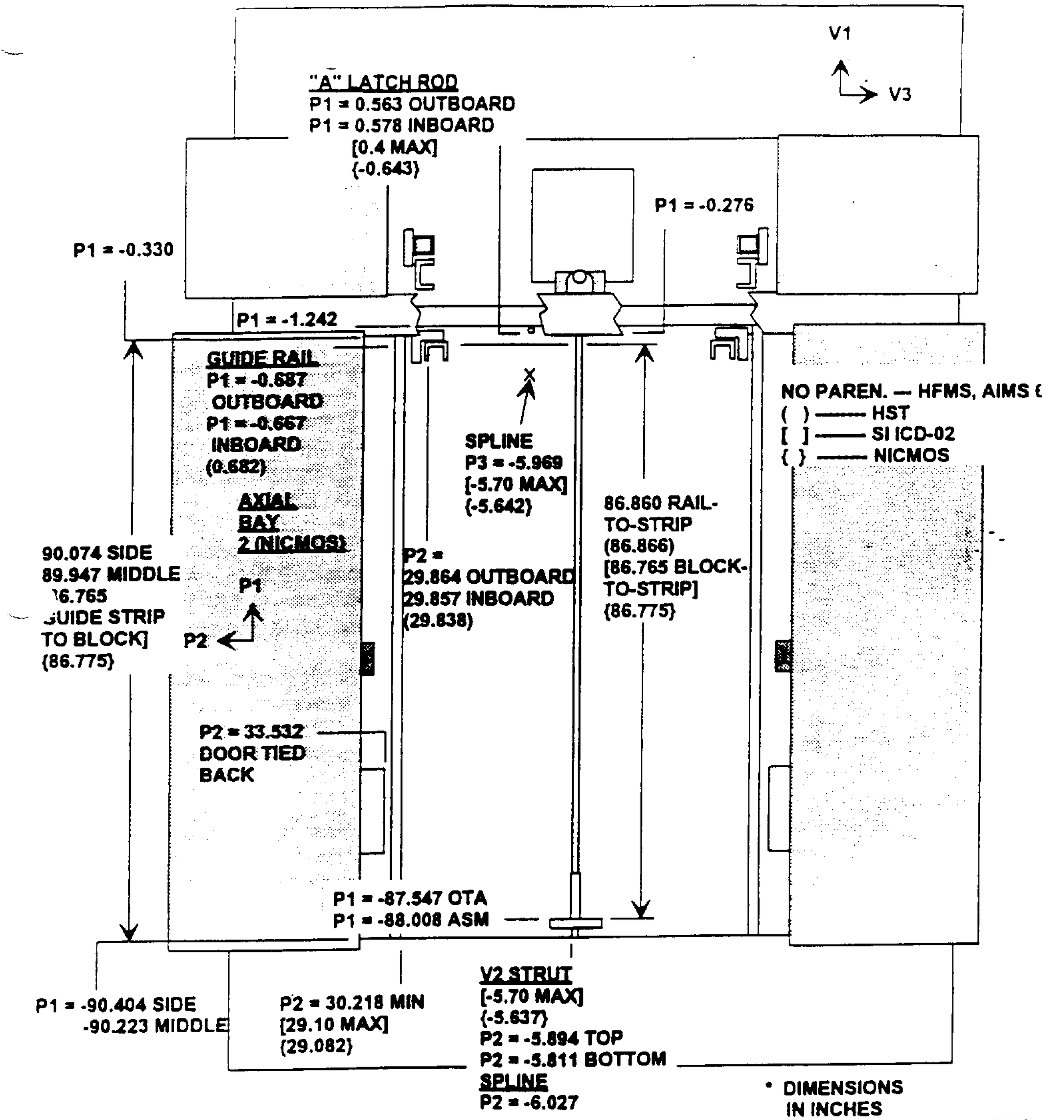

9
REV A

FIGURE 6-5 HST/HFMS/NICMOS COMPARISON
AXIAL BAY 2

(NEW PAGE CREATED BY IRN 112)

IRN 112
18 DECEMBER 1994
A16-ST-1117

"A" latch rod --- Once the instrument is swept into the HST, it is driven in the +P1 direction with the "B" latch until it engages the "A" and "C" latches. The +P1 end of the instrument has no trouble sweeping through the Aft Shroud door and under the OTA peripheral beam. When the instrument is latched, the "A" latch drive rod comes closest to the instrument. The NICMOS +P1 surface is 1 inch behind the ICD allowed surface, and ~1.5 inches behind the HFMS rod. The HST drive rod should be close to the HFMS rod, so should have adequate clearance.

- Spline --- The Focal Plane Structure spline area around the focal plane deck hub was a problem with the original set of instruments. Subsequently, the ICD envelope was pulled back from the original envelope. The measured HFMS P3 dimension including MLI was -5.969 inches. The ICD allowed SI value is -5.700 max, and the measured NICMOS value was -5.642. There should be good clearance in this area. In the P2 direction, the measured HFMS value was -6.027 where the NICMOS value is -5.637. The ICD allowed is the same for P2 and P3. Again, there should be good margin.

- V2 Strut --- The instrument sweeps by the V2 strut as it is installed into the OTA. The worst case measured value for the HFMS was P2 = -5.811 inch. The corresponding NICMOS value was -5.673 inch. The allowed ICD value is -5.700, so again there should be good margin.

- V3 Struts --- The instrument sweeps by the V3 struts and braces as it is installed into the OTA. The worst case measured value on the HFMS was P2 = 30.218 inches. The allowed ICD instrument value is 29.10 max, and the measured NICMOS value was 29.082. Again there is good margin.

- Guide Block to Strip Length --- The length between the SI guide blocks and strip must be contained within the separation between the OTA guide rails. The minimum OTA rail separation is 86.866 inches whereas the NICMOS separation is 86.775 inch. Therefore, there is good margin for SI insertion.

- Fit through HST doors --- The measured HFMS door opening was measured to be 89.847 inches worst case. The allowed ICD guide block to guide strip separation, the longest SI dimension, is 86.865 inches. The measured NICMOS value was 86.775. There should be good margin during insertion through the door.

- Forward Guide Blocks Fit to OTA Rails --- The NICMOS guide blocks will fit through the slots in the OTA guide rails during latchup. A worst case tolerance stack up analysis is shown in Figure 6-6 along with the measured NICMOS guide block positions. (Note that the separation

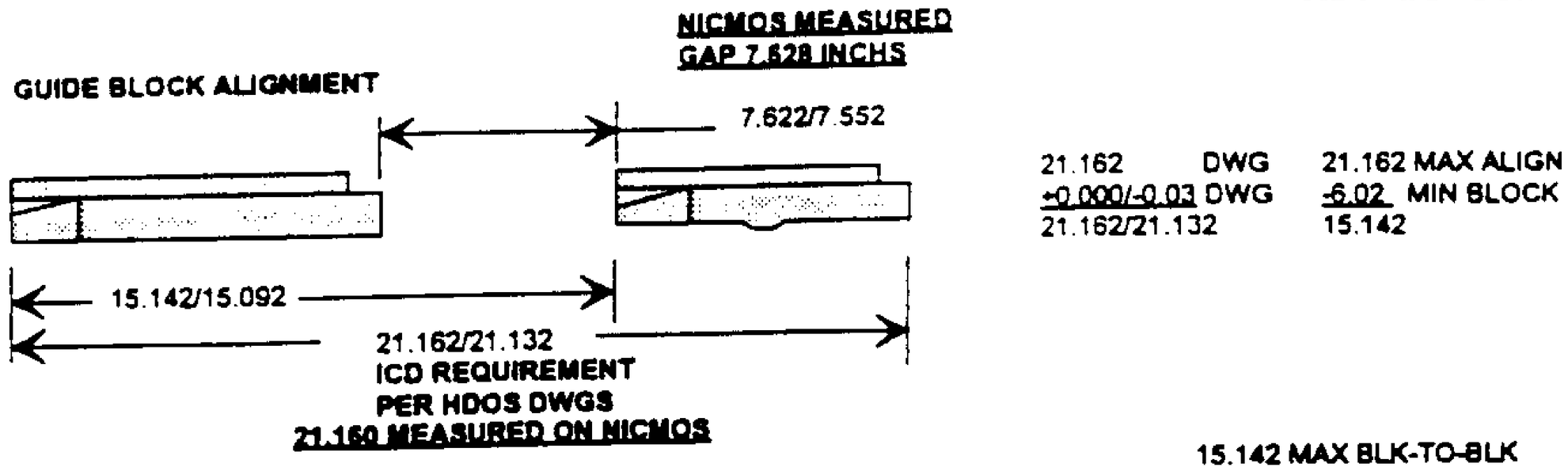

FIGURE 6-6 NICMOS GUIDE BLOCK INTERFACE WITH OTA GUIDE RAIL

ST-1127-12
27 FEBRUARY 1996
IRN 112
19 DECEMBER 1996

between the blocks was measured using a set of inside calipers. The data is contained in Appendix A.) Three items are critical: 1) OTA rail fit between the two blocks, 2) block end-to-end fit through the OTA rail slots, and 3) block fit in the OTA rail channel. The third item is discussed in Figure 6-8 and Section 6.4.2. The first two items are illustrated in Figure 6-6. The worst case fit of the OTA rail between the NICMOS blocks is 0.097 inch. The worst case gap in the passage of the two blocks through the OTA rail slots is 0.015 inch. The estimated 2σ measurement error of the NICMOS blocks is 0.0052 inch, so there is a positive gap. A16-ST-1127

6.3 COMPARISON TO FOS

The Faint Object Spectrograph (FOS) which will be replaced by NICMOS, currently is residing in HST axial bay 2. Figure 6-7 compares the NICMOS and FOS envelopes. The FOS envelope is containted in the HST metrology book.

NICMOS is larger than FOS in the +P1 direction. The FOS front surface is 1.75 inches behind the "A" latch whereas the ICD-02 allowed value is 0.4 inches in front of the "A" latch. Therefore, FOS is 2.15 inches inside the allowed envelope. NICMOS is located 0.637 inch behind the "A" latch which still is well inside the allowed envelope.

The SI end-to-end instrument length is 85.002 inches for NICMOS and 83.1 inches for FOS. The ICD-02 allowed value is 86.500 inches, so that even though NICMOS is larger than FOS, it still is 1.498 inches shorter than is allowed. A

The NICMOS "B" latch placement with respect to the "A" latch is 86.102 inches whereas the FOS latch placement is 86.092 inches. The ICD-02 allowed separation is 86.102 +/- 0.038 inches, so NICMOS alignment is nominal.

The end-to-end guide block-to-guide strip alignment is 86.775 inches for NICMOS and 86.780 inches for FOS where the ICD-02 allowed value is 86.765 inches. Both instruments are out of tolerance, but since the FOS is longer, the NICMOS will fit into the HST with no problem.

The side-to-side separations between the guide blocks and guide strip are 35.716 inches for FOS and 35.777 inches for NICMOS with an ICD-02 allowed value of 35.732 inches. HST axial bay 2 guide rail separation is 35.912 inches (there is an error in the HST Metrology Book, SMR-1092, Table 3.1.14-1 which will be corrected), so that a 0.135 inch gap exists for installation. This gap is sufficient for installation by itself, but in addition since the guide blocks and strip are on opposite edges of the instrument, the instrument is free to rotate slightly to provide more of a gap. 12 Rev A

IRN 112
19 DECEMBER 1990

A16-ST-112

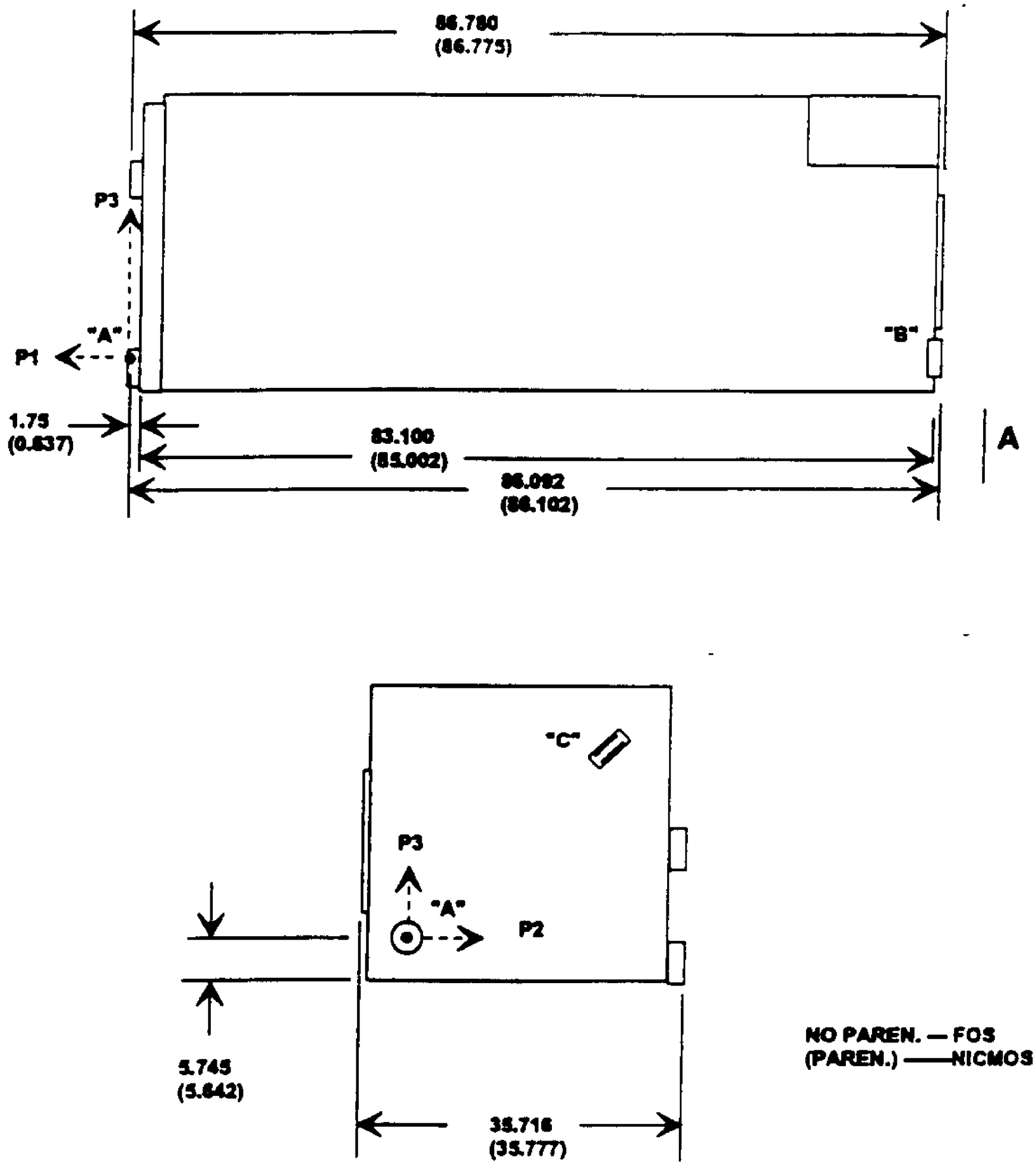

FIGURE 6-7 COMPARISON OF NICMOS AND FOS DIMENSIONS (SEE SMR-1092, FIGURE 3.2-13)

13
REV A

The -P3 inside edge of an SI is important since it is close to the OTA spline when latched up. The original ICD-02 allowance was that the instrument could extend 5.59 inches from the "A" latch. This value was reduced to 5.700 inches for the first and second servicing missions because of tight fits in the HST with the original set of instruments. The FOS value was 5.745 inches whereas, the NICMOS value is 5.642. Thus, NICMOS is smaller than both the ICD-02 allowed value and the FOS value and should have no fit problems in this area.

6.4 OUT-OF-TOLERANCE ITEMS

Table 6-1 lists several items which exceed the ICD-02 allowed tolerance. This section discusses each out-of-tolerance item and demonstrates acceptability for use in HST.

6.4.1 GUIDE BLOCK AND GUIDE STRIP P2

The forward guide block, AIMS point 315, and the guide strip, AIMS point 91, both exceed their allowed dimensions in the P2 direction. The guide strip had no adjustment capability with respect to the instrument whereas the guide blocks were aligned and epoxy doweled during the envelope measurements. However, guide block adjustment capability was limited to the P1 and P3 directions parallel to the mount plane. There was no easy way of correcting the alignment error in the P2 direction, but the out-of-tolerance condition was deemed acceptable.

The effect of having both the guide block and the guide strip out-of-tolerance will affect the side-to-side fit with the HST half rails during installation. The NICMOS side-to-side width is 5.9361+29.8414 = 35.7775 inches, whereas the HST bay 2 guide rails separation is 35.912 inches. (There is an error in the HST Handbook, SMR-1092, Table 3.1.14-1 which will be corrected). This produces a total gap between rails and blocks of 0.135 inches. The design OTA rail separation was 35.928 +/- 0.047 inches and the ICD-02 nominal SI value is 35.732 so that the minimum allowed gap is 0.161 inches. Thus, the actual gap on orbit will be 0.026 inches smaller than design, or 16%. This gap can be traded with the corresponding gap in the P1 direction by tilting the instrument slightly during installation, since the guide strips/blocks/rails are on diagonally opposite ends of the instrument. The OTA rails are 86.866 inches apart minimum near the "A" latch and the NICMOS blocks/strip are 86.775 inches apart in the P1 direction producing a gap of 0.091 inches. This 0.091 inch P1 gap traded with the 0.135 inch P2 gap will be sufficient for installation.

IRN 112
18 DECEMBER 1996
A16-ST-1127

6.4.2 GUIDE BLOCKS COPLANAR

AIMS points 313, 314, and 315 refer to the P2 alignment of the two guide blocks. Since there was no adjustment capability for the guide blocks in the P2 direction, the as-assembled tolerances were accepted. The forward guide block, points 314 and 315, is aligned outside the ICD-02 allowed tolerance. The guide block-to-guide strip aspect of this alignment was discussed in Section 6.4.1. Another aspect of this misalignment is coplanarity with the aft guide block. During installation into the OTA, the two guide blocks ride down a channel which is the OTA half guide rail. If the blocks are too badly out of coplanarity, their combined width will fill the gap in the channel, and the blocks will bind up. Figure 6-8 illustrates the worst case stack up of tolerances for the guide blocks and guide rail illustrating that a 0.056 inch non-coplanarity condition could bind up the blocks in the rails. The NICMOS block non-coplanarity is 0.026 inch leaving a 0.03 inch margin, worst case. Therefore, this alignment is acceptable.

ICD-02 includes the HDOS assembly drawing 679-6756-011 as a requirement for guide block alignment. This drawing specifies a coplanarity of 0.1 inch. This value is too large and should be reduced to 0.056 inch max or some smaller value.

6.4.3 GUIDE STRIP P3

The aft guide strip is aligned too far away from the insertion leading edge of the instrument in the -P3 direction as shown with AIMS data point 99. As shown in Figure 6-9, the NICMOS guide strip and OTA guide rail operate by sliding a 90 degree corner strip down a corner which is somewhat larger than 90 degrees during insertion into the OTA. Once the instrument is fully inserted into the OTA, it is translated in the P1 direction, away from the OTA half rail, for latchup in the "A" latch. This moves the NICMOS strip away from the OTA rail. There is no structure in the vicinity of the rail and strip at the point of translation into the "A" latch, so that a 0.045 inch out-of-tolerance condition can have no effect of NICMOS installation. Therefore, this alignment is acceptable.

6.4.4 -P1 END

The -P1 end of the NICMOS instrument is shorter than allowed by the ICD. ICD-02 specifies the P1 position of the end surface as -86.1 -0, +.1 inches. AIMS points 182, 186, 190, 193, and 198 all are approximately .5 inch shorter. The ICD is too restrictive with the negative tolerance and should allow the instrument manufacturer to use a shorter package if desired. The critical dimensions define the locations of the "B" latch and the aft guide strip. NICMOS has installed brackets to place the guide strip at its correct location, and the "B" latch mount surface was correct with

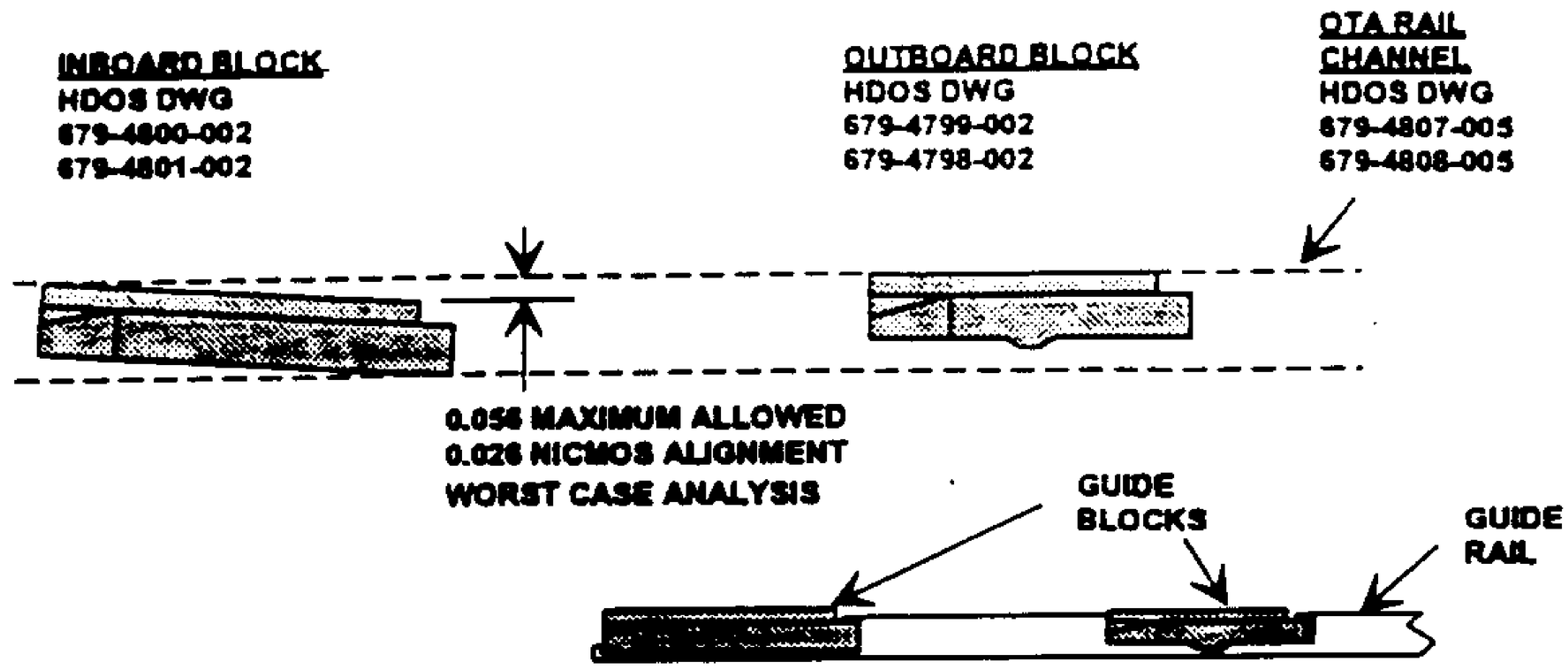

FIGURE 6-8 RAIL/BLOCK FIT WITH NON-PARALLEL GUIDE BLOCKS

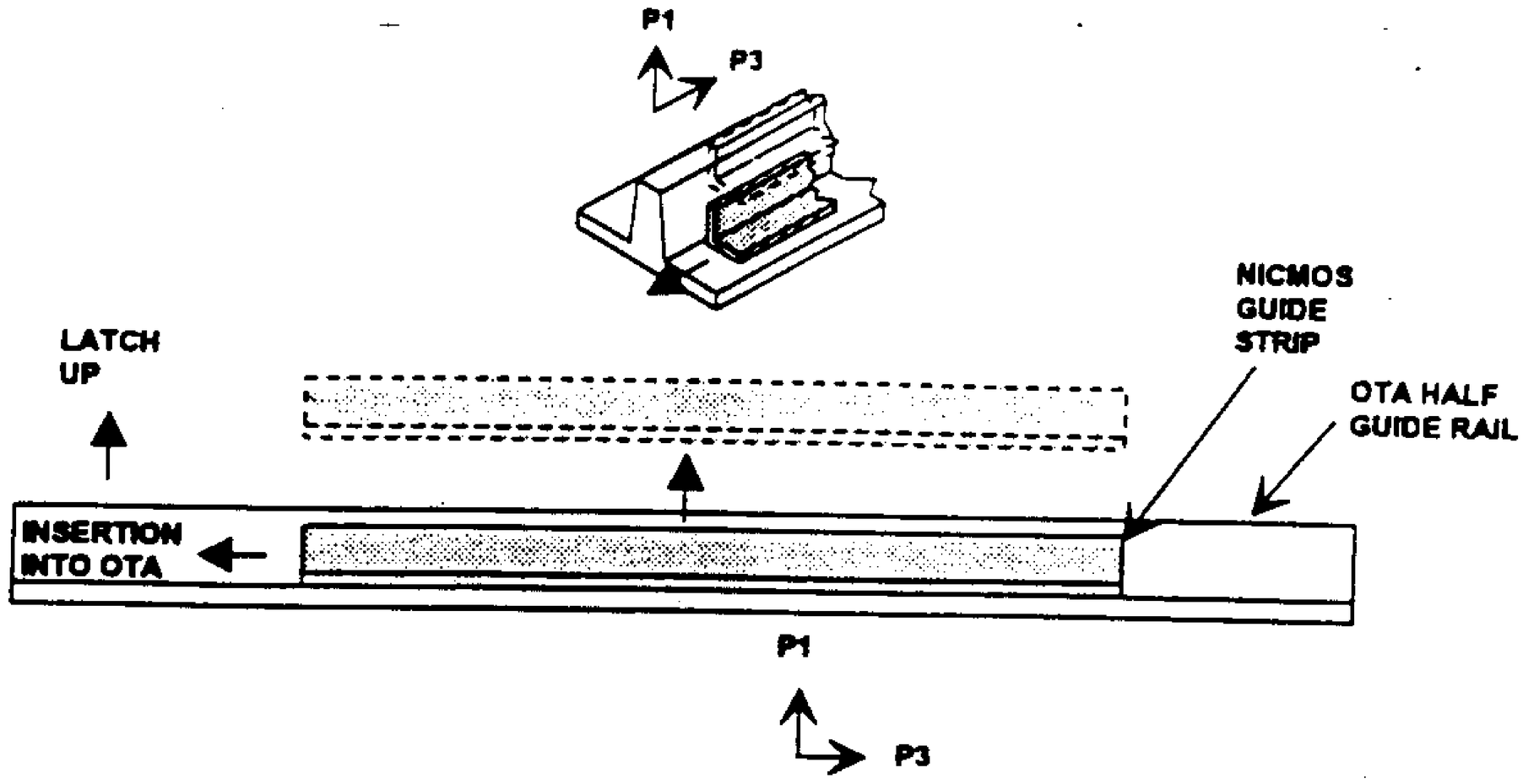

FIGURE 6-9 GUIDE STRIP/RAIL OPERATION

IRN 112
15 DECEMBER

respect to the "A" latch. Therefore, this out-of-tolerance condition is acceptable. The ICD-02 requirement should be reviewed and perhaps modified to read -86.0 max. A16-ST-11

6.4.5 ELECTRICAL CONNECTOR PANEL

The electrical connector panel on the +P2 instrument side has bolt heads out of tolerance as defined by AIMS points 202 and 214. However, this panel is removed for flight and replaced by a cover. Since the cover was not in place during the AIMS measurements, its envelope could not be confirmed.

6.4.6 GUIDE BLOCK P1

Both the forward and the aft guide blocks are out-of-tolerance in the P1 direction as shown in AIMS points 304, 305, 311, and 312. The effect of this alignment on NICMOS installation and operation in the HST is the end-to-end fit of the guide blocks and strip in the OTA guide rails. As discussed in Section 6.3, the NICMOS guide block-to-strip alignment is shorter than the FOS alignment, so there will be no problem with installation into the HST. Figure 6-10 shows the as-built HST guide rail alignment for axial bay 2. Also shown are the minimum total gaps between the NICMOS and OTA rails during installation. (The total gaps can be divided between the +P1 end gap and the -P1 end gap.) The gaps are defined by the outboard end of the forward guide block, AIMS point 305, as it sweeps through the OTA rail channel during installation. The minimum condition occurs just prior to contact between the forward NICMOS block and the OTA guide rail inboard end and microswitch.

6.5 "B" LATCH PLACEMENT

Separation between the "A" latch and the "B" latch in the P1 direction is critical for maintaining "B" latch preload under extremes of environmental conditions. The nominal separation requirement from ICD-02 is 85.727 +/- 0.03. This separation was measured in two ways and found to agree within 0.011 inches. The latch coordinate system was defined using the latch tools one of which was in the "B" latch. The latch separation using this tool is 85.747 - 0.0085 = 85.738 as shown in AIMS data point 38 in Appendix A. See Section 7.1 for discussion of the latch tools and the 0.0085 inch tool error.

The second method of latch placement determination used K&E stick on targets on 4 quadrants of the "B" latch spherical bearing as metrology references. The spherical bearing end is located to within 0.001 inch of the sphere center per drawing. Averaging the P1 dimensions of the four targets cancels out the tilt of the bearing. The average measured value was adjusted by subtracting 0.0085 inch for the target and 0.375 inch for

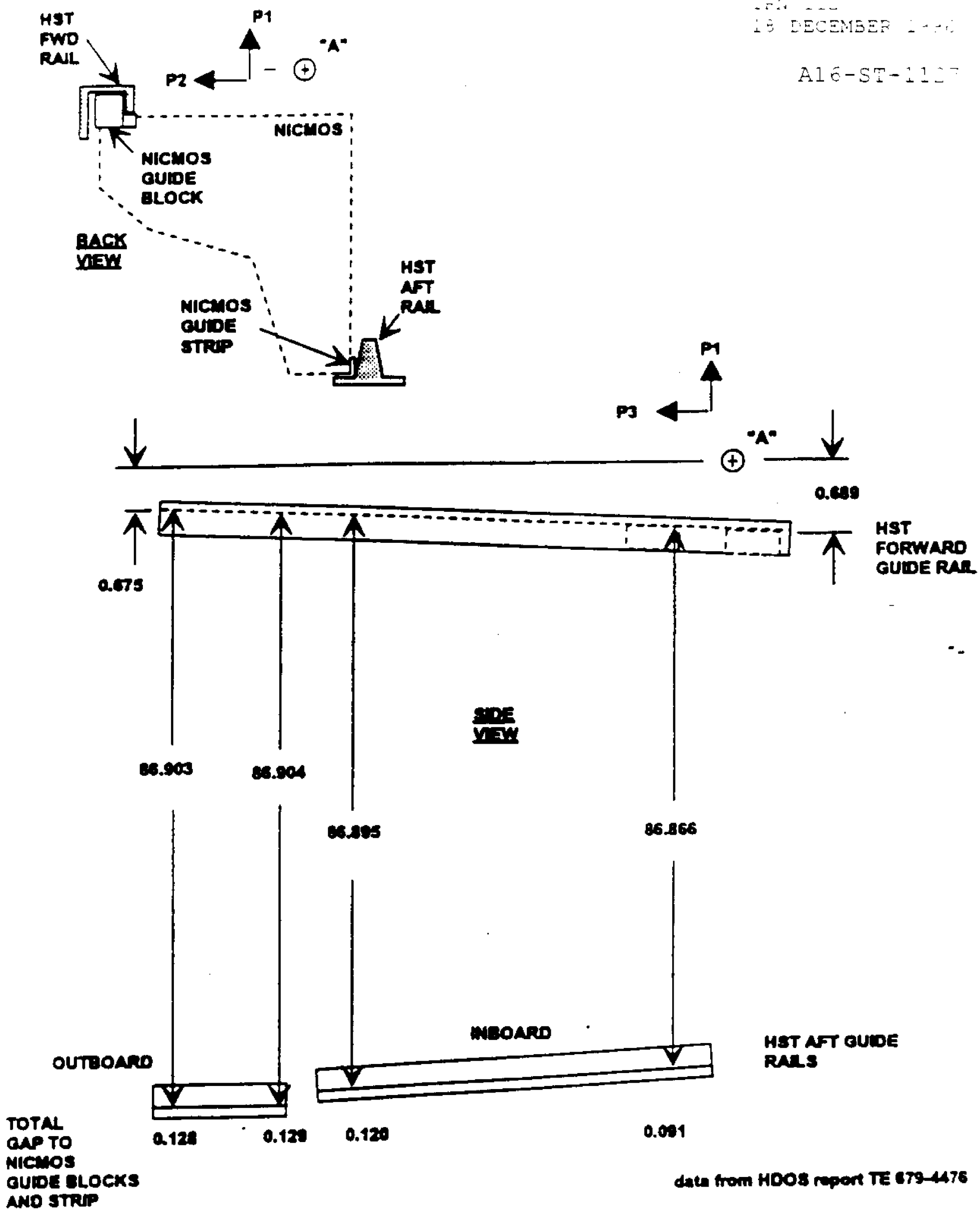

FIGURE 6-10 HST AXIAL BAY 2 GUIDE RAIL ALIGNMENT

19
Rev A

(NEW PAGE CREATED BY IRN 112)

the latch surface displacement from the sphere center. The result was a latch placement of 85.727 inches.

7. DATA ANALYSIS

Measurements were made using AIMS to capture the data. Three types of targets were used to provide precise metrology references for pointing the theodolites. 1) Special targets and tools were used for the latch tools as described in Appendix C and Section 7-1. 2) K&E stick-on targets were attached to Kapton tape (combined thickness of 0.0085 inch) for easy placement and removal. 3) A 0.500 inch diameter tooling ball on a shaft could be positioned against desired measurement surfaces.

The AIMS measurement approach is a digital sampling of features on a test article. Measurements were made first by surveying NICMOS for critical features which were defined by Interface Control Document requirements or by known areas of tight fit into the HST. Once a measurement point was selected, either a stick on target was attached to the feature or the tooling ball was held against the feature. The tooling ball was the preferred target since it inherently yields higher measurement accuracy. Each target was measured using as many theodolites as could view it. In addition in most cases, a minimum of 3 and sometimes 5 measurements were made to improve the measurement precision.

The data were reduced first by placing all data in the P-coordinate system, second by identifying which degree of freedom is applicable with respect to a given requirement, and third by removing the target thickness from the data.

7.1 LATCH TOOLS

The alignment tools which were used to define the positions of the "B" and "C" latches were designed by Swales & Associates and are documented in drawings SC 1600052 through 1600054 as contained in Appendix C. During the AIMS COSTAR measurements using the alignment tools, they were inspected and measured by Paramax to determine deviations between the designed and measured dimensions of the tools. The results of the Paramax measurements are contained in Appendix C and summarized in Figure 7-1.

Measurements were made to determine the concentricity of the bore through the center of the "C" latch tool, the uniformity in its cylindrical diameter, and the dimensions from the center of the precision checking ball inserted in the bore of the tool to the base of the tool. This tool has less than 0.0005 inch error in the lateral direction, which is the only direction which is critical.

A16-ST-1127

"B" LATCH TOOL

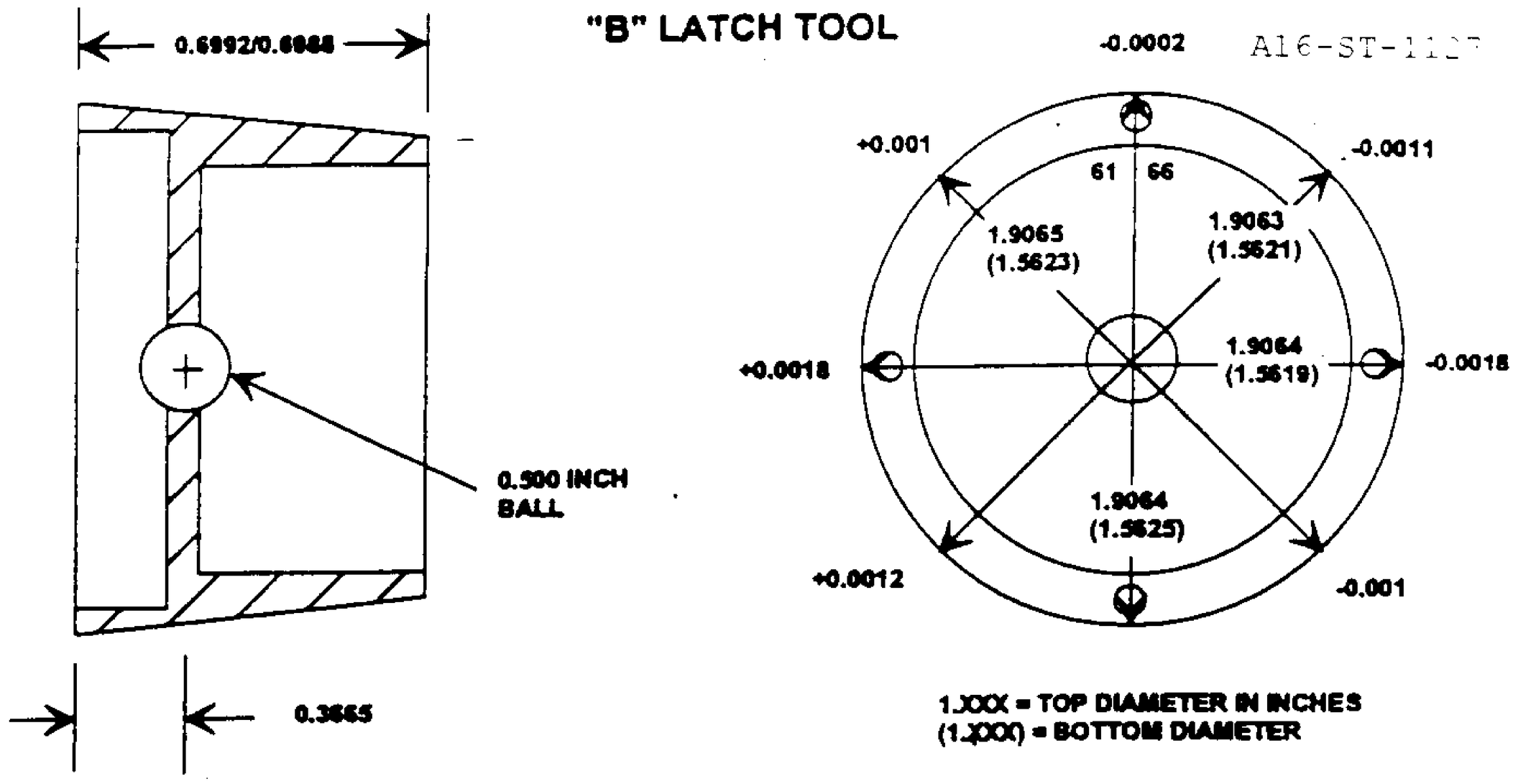

"C" LATCH TOOL

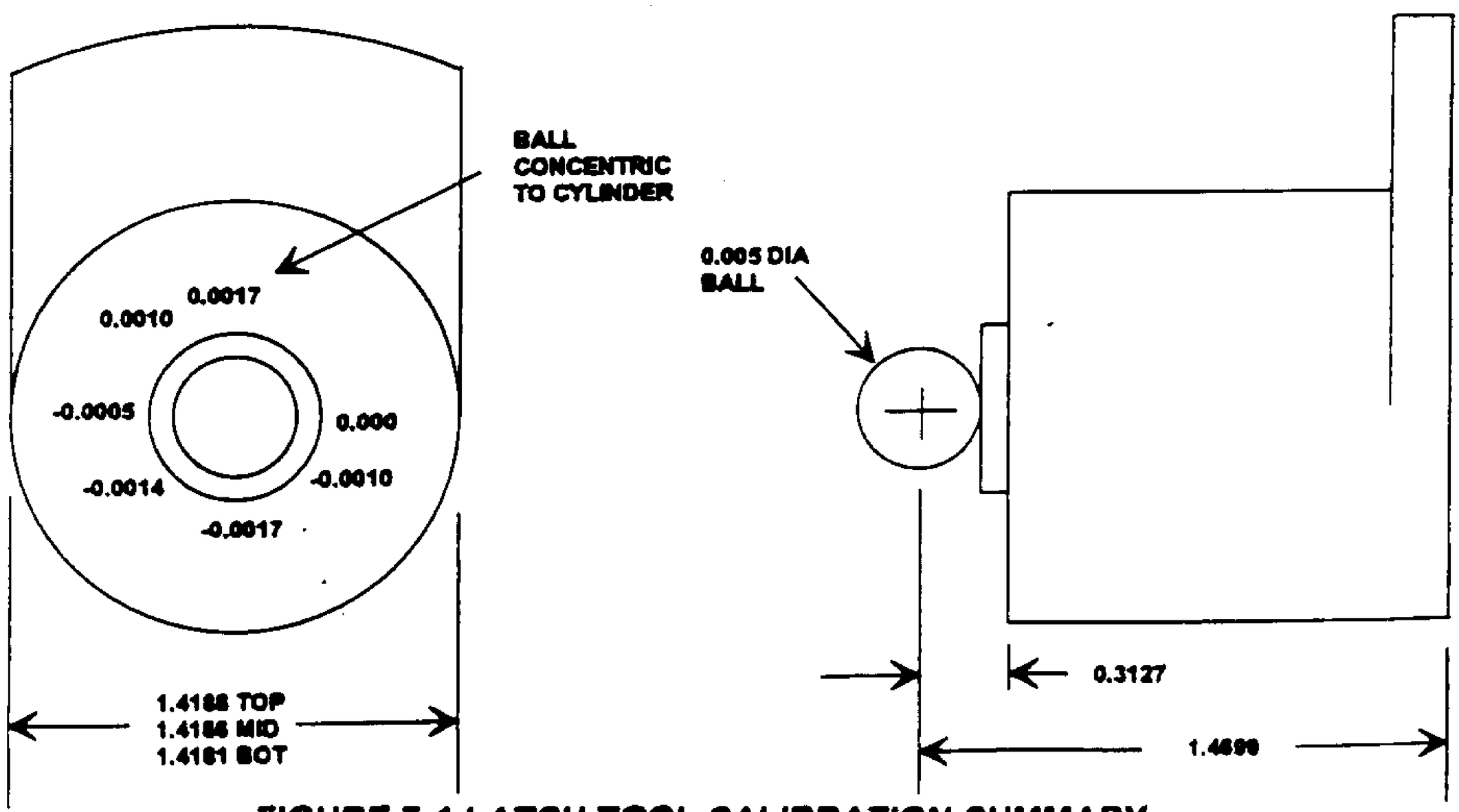

FIGURE 7-1 LATCH TOOL CALIBRATION SUMMARY

The "B" latch tool consists of two parts shown in the figure. A delrin insert secures a 0.500, inch checking ball to the tool as it threads into the body of the tool. The concentricity of the bore through the center of the "B:" latch tool was measured to determine the centration of the ball to the conical surface. Since the peak run out was 0.0018 inch, the concentricity is 0.0009 inch which is the error the ball will produce with respect the center of the "B" latch. The depth of the checking ball was measured with respect to the tool's outer end. The outer surface of the truncated cone of the tool seats in a similarly shaped conical bore in the rotating spherical bearing of the "B" latch. Installation of the tool into the "B" latch is shown in Figure 7-2. The rotating conical bore of the "B": latch on the NICMOS side is used to help align the male end of the "B" latch when latching into the SI. When seated in the latch, the center of the checking ball is located 0.0085 inch from the center of the "B" latch in the -P1 direction. A tolerance analysis of the potential seating error of the tool in the latch was performed using the latch drawings and the tool measured values. This analysis is contained in Appendix D. The correction factor of 0.0085 inch can vary by +/- 0.014 inch due to the stack up of tolerances.

The "C" latch tool, shown in Figure 7-2, fits into the well of the "C" latch. A precision checking ball inserted into the center hole of the tool provides the AIMS target. The tool, when inserted in the latch well is placed such that the center of the ball is bisected by a scribe line defining the center of the "C" latch. The radius of the cylinder is 0.009 inch less than the flight "C" latch radius, so a 0.009 inch shim was placed between the tool and the latch on the -P2 side of the tool to center it on the latch.

7.2 ERROR ANALYSIS

Several error sources contribute to the total error in determining any NICMOS dimension in latch coordinates. The error sources and estimated values are determined as follows:

- Target Thickness --- Measurements of specific locations on the NICMOS were made using either K&E stick on targets or precision tooling balls as targets for the theodolites. The thicknesses of these targets were removed from the data to provide the reported measured values. The precision tooling ball diameters all check to better than 0.0001 inch using micrometers. The K&E targets always were attached to Kapton tape before placing on the NICMOS. The target/tape combinations were checked with a micrometer and always read 0.0085 inch thick. The error in making these measurements and the variability in thicknesses between targets is estimated as less than 0.0002 inch. Therefore, a 1σ error of 0.0002 inch is assigned to this error source.

"C" LATCH

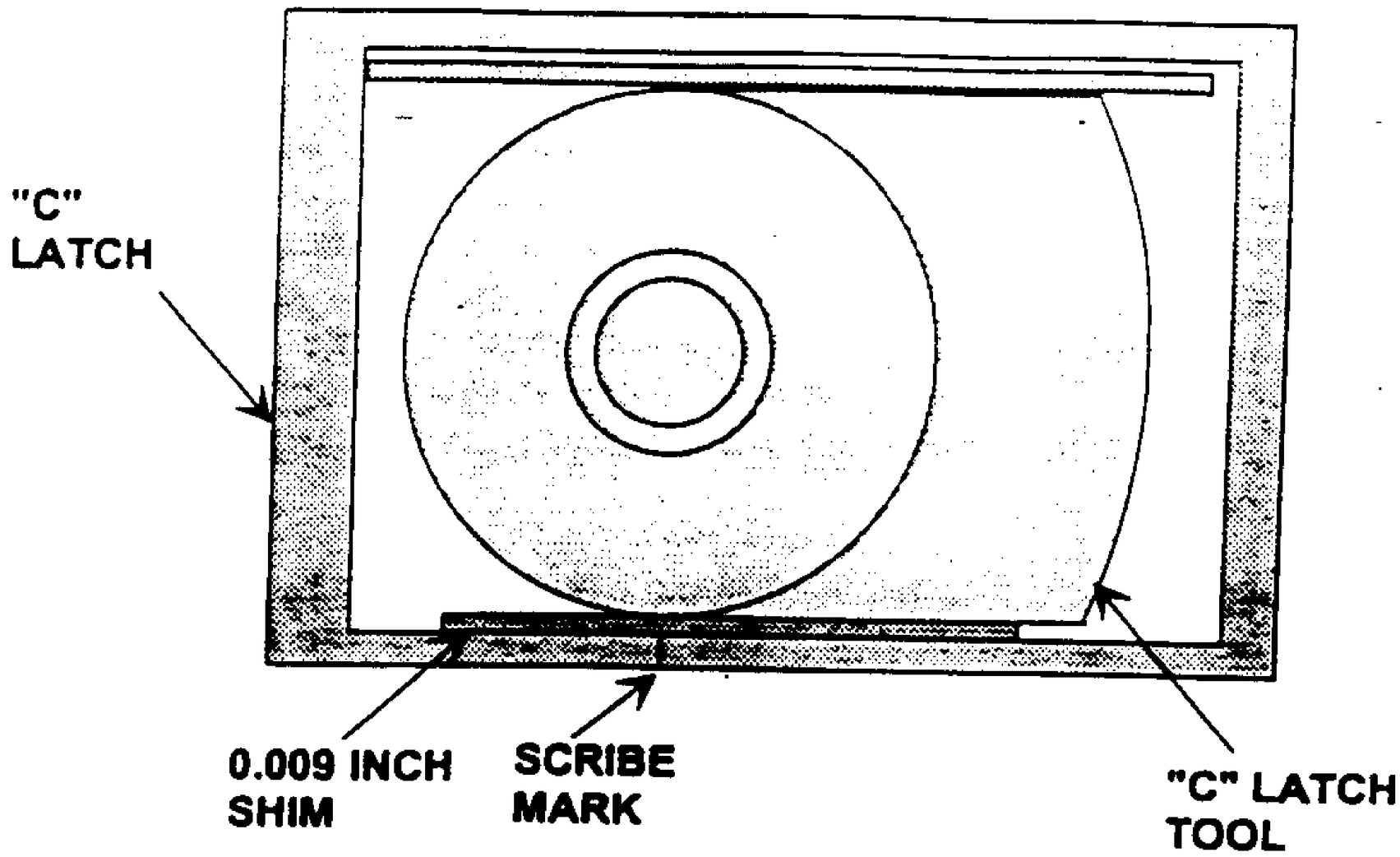

"B" LATCH

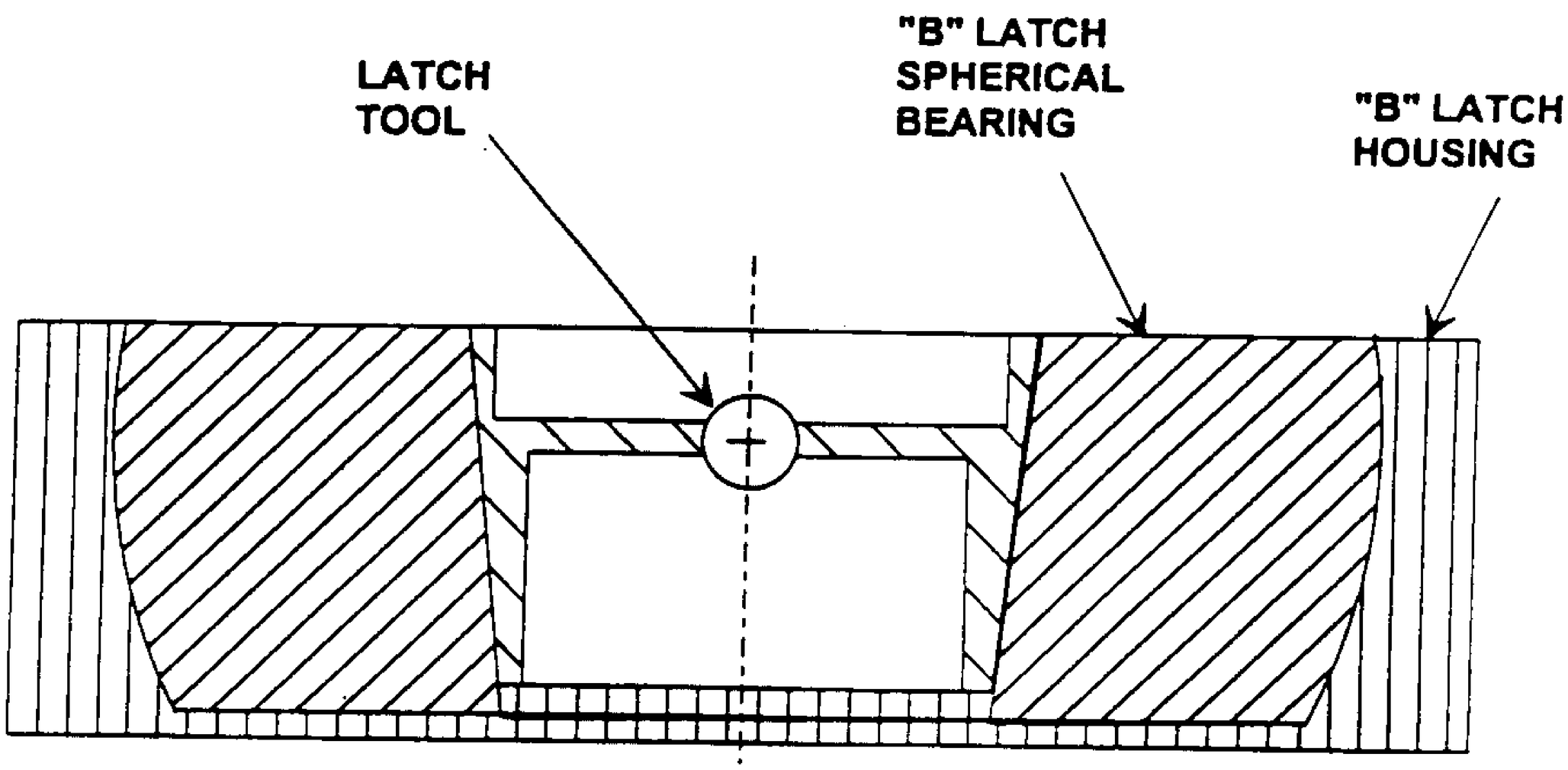

FIGURE 7-2 LATCH TOOL INSTALLATION

- AIMS Measurements --- Most critical measurements with AIMS are made with more than 2 theodolites viewing the target. AIMS needs only two-theodolites to calculate a position, so larger numbers of theodolite sightings are used to improve the target location by averaging. Experience has shown that the rms repeatability of a set of targets can be as good as 0.001 inch. In addition, 3 to 5 measurements each are made on most targets and the results averaged. The peak spread in these measurements is usually less than 0.001 inch. Therefore, the 1σ error is conservatively estimated as 0.002 inch.

- Latch Tools --- The two latch tools were calibrated by Paramax for the COSTAR verification effort. See Appendix C for the data sheets. The targets are true to the latch metrology points to better than 0.001 inch, so a conservative 0.002 inch 1σ value is assigned to accommodate assembly errors.

These error sources combine to provide a total absolute error as shown in Table 7-1. the 1σ error is 0.0028 inch absolute with respect to latch coordinates. The estimate relative errors between any two targets is the rss of two individual AIMS measurements, or 0.0028 inch.

TABLE 7-1 MEASUREMENT ERROR ANALYSIS

ERROR	ITEM
0.0002	TARGET THICKNESS
0.002	LATCH TOOL ERRORS
0.002	NICMOS AIMS MEASUREMENTS
0.0028	RSS ERROR

7.3 ACKNOWLEDGMENTS

Special thanks go to Carlos Aviado and Dean Osgood for long hours making the AIMS measurements.

8.0 ENVELOPE REMEASUREMENTS, 10/16/96

When NICMOS was returned to BASD following the 5/16/96 measurements, several access ports and the guide blocks were removed and reinstalled. On 10/16/96 following redelivery to GSFC, these items were measured with AIMS. This section discusses the results of the latest measurements. The AIMS raw data are contained in Appendix E and the as run data sheets are contained in Appendix F.

8.1 SUMMARY AND CONCLUSIONS

The key features of this measurement set were based on the following configuration considerations:

- The forward and aft access ports on the -P2/-P3 instrument edge were removed to provide access to the instrument optics and electronics. The bolts in these panels define the envelope, and all were found to be within ICD-02 allowed values similar to the original measurement values.

- The guide blocks were removed and reinstalled. The measured positions of the blocks agreed within 0.007 inch of the 10/16/96 values except for one point which was 0.01 inch different. This could mostly be measurement error.

- The GSE purge cover was still installed on the instrument. Micrometer measurements (see Appendix F) were made on both the flight and GSE covers, whereas AIMS measurements were made on the GSE cover to provide a prediction of the location of the flight cover when it is installed. The flight cover is estimated to be out of tolerance by 0.074 inch in the P1 direction.

All dimensions which were remeasured are acceptable without requiring any modifications or adjustments. Table 8-1 summarizes the AIMS measurements, and Figures 8-1 and 8-2 illustrate the locations of the measurements. In Table 8-1, the column headed by "No." refers to the AIMS data base number for that measurement point. These points can be identified on the figures which are listed under the column "FIG". The coordinates of the data points are listed in NICMOS P-coordinates which are defined by the latches. The applicable coordinates are boxed, and the remaining degrees of freedom are somewhat arbitrary and can not be correlated with any specific requirement. The table lists the requirement for each data point as defined in ICD-02, Section 4. The differences between the requirements and the actual measured points are contained in column "DELTA". All out-of-tolerance data points are boxed in the "DELTA" column. The status of new or changed items is listed under the column "STATUS", the two columns "5/16/96 DELTA AND No." list, for convenience, the comparable data points from Table 6-1. Finally, the report sections which discuss the items are listed under the column "SECTION".

TABLE 8-1 NICMOS ENVELOPE MEASUREMENTS, 10/16/96
10/16/96

ALL DATA IN INCHES
DATA CORRECTED FOR TARGETS

No.	NAME	FIG.	P1	P2	P3	RQMT	DELTA	(5/16/96) DELTA	(5/16/96) No.	SECTION
14A	B LATCH (TOOL)	8-1	-85.7384	-2.4	-2.4	-85.727 +/- 0.036	0.0114	.....		8-5
20A	C LATCH (TOOL)	8-1	0.8286	21.1625	21.1625	N.A.	.....	.....		8-5
29A	A LATCH (SPHERE FIT)	8-2	0	0	0	N.A.	.....	.....		8-5
30A	GSE PURGE COVER	8-1	0.2641	-1.2841	-3.7469	- 5.70 MAX	O.K.	.....	274	8-4
31A	GSE PURGE COVER	8-1	0.2335	-3.0054	-5.482	- 5.70 MAX	O.K.	.....	294	8-4
32A	GSE PURGE COVER	8-1	0.2739	-4.4278	-5.4602	- 5.70 MAX	O.K.	.....		8-4
33A	GSE PURGE COVER	8-1	0.3177	-5.0348	-5.1803	- 5.70 MAX	O.K.	.....	297	8-4
34A	GSE PURGE COVER	8-1	0.2635	-5.474	-4.3959	- 5.70 MAX	O.K.	.....	300	8-4
35A	GSE PURGE COVER	8-1	0.3085	-5.2133	-3.4307	- 5.70 MAX	O.K.	.....	279	8-4
36A	GSE PURGE COVER	8-1	0.3573	-3.4321	-1.6259	- 5.70 MAX	O.K.	.....	280	8-4
37A	GSE PURGE COVER	8-1	0.3557	-2.8296	-1.7375	- 5.70 MAX	O.K.	.....		8-4
40A	GSE PURGE COVER	8-1	0.2623	-1.7538	-2.8051	- 5.70 MAX	O.K.	.....		8-4
41A	GSE PURGE COVER	8-1	0.3815	-2.6087	-2.5026	0.4 MAX	0.0185	0.0197	271	8-4
42A	GSE PURGE COVER	8-1	0.3794	-4.7766	-4.5128	0.4 MAX	0.0206	0.0201	272	8-4
43A	A LATCH (FLAT FACE)	8-2	-0.0011	-0.4529	-0.2419	N.A.	.....	.....		8-5
44A	-P3 FWD COVER BOLT	8-2	-1.7299	-2.8062	-5.6579	- 5.70 MAX	-0.0421	-0.0712	143	8-3
45A	-P3 FWD COVER BOLT	8-2	-2.7812	0.8969	-5.6351	- 5.70 MAX	-0.0649	-0.0585	146	8-3
46A	-P3 FWD COVER BOLT	8-2	-15.8812	0.9523	-5.6363	- 5.70 MAX	-0.0637	.....		8-3
47A	-P3 FWD COVER BOLT	8-2	-16.7062	-3.8176	-5.6252	- 5.70 MAX	-0.0748	.....		8-3
48A	-P3 FWD COVER EPOXY BEAD	8-2	-14.4498	-4.4019	-5.4985	- 5.70 MAX	-0.2015	.....		8-3
49A	-P2 FWD COVER EPOXY BEAD	8-2	-12.4729	-5.5046	-2.5195	- 5.70 MAX	-0.1954	.....		8-3
50A	-P2 FWD COVER BOLT	8-2	-16.7577	-5.6267	-3.8259	- 5.70 MAX	-0.0733	.....		8-3
51A	-P2 FWD COVER BOLT	8-2	-15.8603	-5.6335	0.8679	- 5.70 MAX	-0.0665	.....		8-3
52A	-P2 FWD COVER BOLT	8-2	-2.7606	-5.6351	0.9434	- 5.70 MAX	-0.0649	.....		8-3
53A	-P2 FWD COVER BOLT	8-2	-1.7106	-5.6719	-2.7249	- 5.70 MAX	-0.0281	-0.0653	230	8-3
54A	-P2 AFT COVER BOLT	8-2	-84.2155	-5.6859	-4.7557	- 5.70 MAX	-0.0141	-0.0272	250	8-3
55A	-P2 AFT COVER BOLT	8-2	-84.1645	-5.6776	0.1477	- 5.70 MAX	-0.0224	.....		8-3
56A	-P2 AFT COVER BOLT	8-2	-78.0311	-5.6395	-3.8538	- 5.70 MAX	-0.0605	.....		8-3
57A	-P3 AFT COVER BOLT	8-2	-84.259	-4.7662	-5.6838	- 5.70 MAX	-0.0162	.....		8-3
58A	-P3 AFT COVER BOLT	8-2	-84.1957	0.1323	-5.691	- 5.70 MAX	-0.009	.....		8-3
59A	-P3 AFT COVER BOLT	8-2	-78.1246	0.437	-5.635	- 5.70 MAX	-0.065	.....		8-3
60A	OUTBOARD GUIDE BLOCK	8-2	0.5889	29.443	15.5663	15.5705 +0, -.030	0.0042	0.0045	310	8-2
61A	OUTBOARD GUIDE BLOCK	8-2	0.6362	29.2752	14.838	0.645 +/- 0.005	0.0088	0.0183	312	8-2
62A	OUTBOARD GUIDE BLOCK	8-2	0.6351	29.2639	11.3231	0.645 +/- 0.005	0.0099	0.0126	311	8-2
63A	OUTBOARD GUIDE BLOCK	8-2	0.3386	29.8223	12.5809	29.812 +/- 0.005	-0.0103	-0.003	313	8-2
64A	OUTBOARD GUIDE BLOCK	8-2	0.1584	29.4601	9.299	N.A.	.....	.....		8-2
65A	INBOARD GUIDE BLOCK	8-2	0.5624	29.5965	1.9332	N.A.	.....	.....		8-2
66A	INBOARD GUIDE BLOCK	8-2	0.6613	29.4438	1.0215	0.645 +/- 0.005	-0.0163	-0.0136	304	8-2
67A	INBOARD GUIDE BLOCK	8-2	0.6541	29.4907	-3.7307	0.645 +/- 0.005	-0.0091	-0.0079	305	8-2
68A	INBOARD GUIDE BLOCK	8-2	0.2539	29.8423	-3.0604	29.812 +/- 0.005	-0.0303	-0.0294	315	8-2
69A	INBOARD GUIDE BLOCK	8-2	0.1295	29.6233	-5.595	-5.595 +/- 0.005	0	-0.0005	308	8-2
70A	INBOARD GUIDE BLOCK	8-2	0.2367	29.826	0.4038	29.812 +/- 0.005	-0.014	-0.0081	314	8-2

NOTE- BOXED ITEMS IN "DELTA" COLUMN OUT OF TOLERANCE

(NEW PAGE CREATED BY IRN 112)
10.8-56

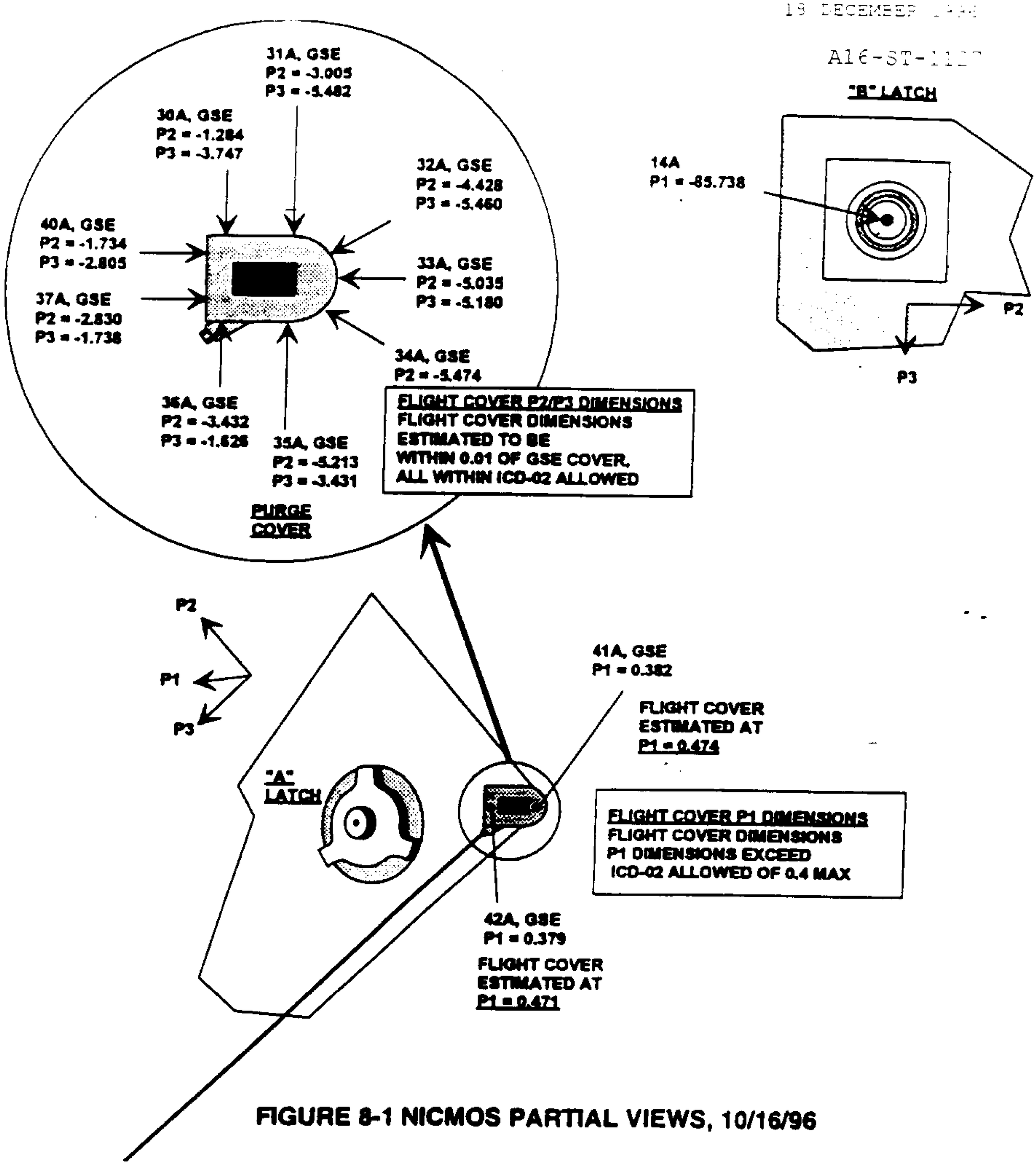

FIGURE 8-1 NICMOS PARTIAL VIEWS, 10/16/96

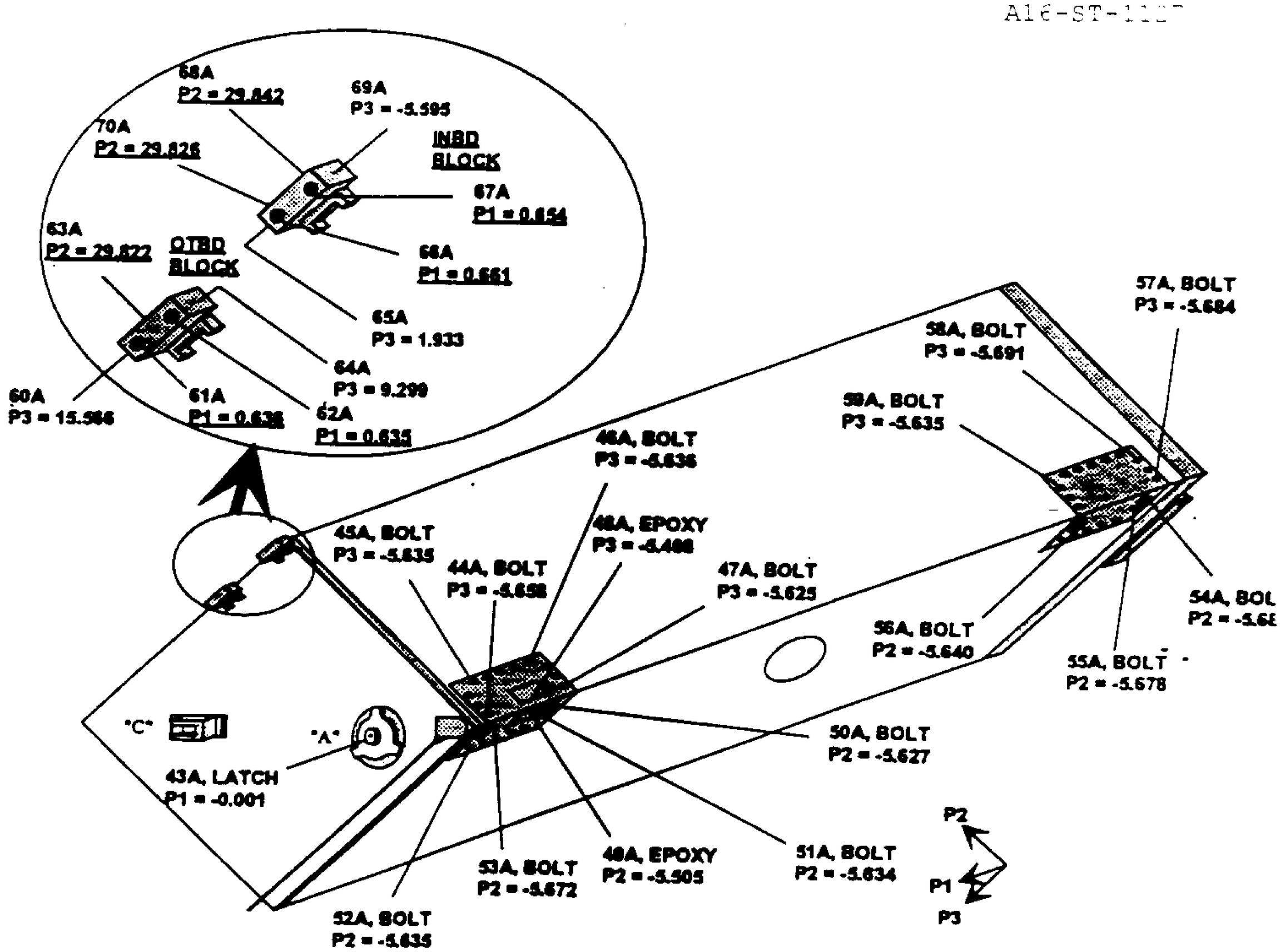

FIGURE 8-2 NICMOS -P2/-P3 SIDE VIEW, 10/16/96

(NEW PAGE CREATED BY IRN 112)
10.8-58

8.2 GUIDE BLOCKS

The guide block measurements are represented by targets 60A through 70A. The block locations agree well with the original measurements, especially the critical dimensions represented by points 61A and 69A. The P3 location of the inboard guide block and the end-to-end block separation agree to within 0.001 inch of the original measurements which were acceptable values. The outboard guide block P1 dimension has decreased by as much as 0.01 inch, but the motion is in such a direction as to improve the previous out of tolerance condition. All other items agree within 0.007 inch, whereas the estimated 2σ error is 0.005 inch. Thus, the measurement differences could just be noise.

Data points 61A, 62A, 63A, 66A, 67A, 68A, and 70A all exceed the ICD-02 allowed values. However, only data point 63A is new information.

The discussion of Section 6.4.6 is still valid for the P1 direction, and these out-of-tolerances conditions are still acceptable.

The additional out-of-tolerance item, 63A, is acceptable. The discussion of Section 6.4.1 is still applicable and can be adjusted by the additional 0.007 inch delta for this measurement.

The coplanarity discussion of Section 6.4.2 still is applicable. The block coplanarity, as represented by data points 63A, 70A, and 68A, is 0.02 inch, which is an improvement over the previous 0.026 inch.

8.3 -P2/-P3 ACCESS PORTS

The two access ports shown on the -P2/-P3 instrument edge of Figure 8-2 were removed and replaced. Targets 44A through 59A represent the P2 and P3 locations of the protruding bolts and new epoxy beads. All measurements are well within the ICD-02 allowed values, and all measurements agree well with previous measurements.

8.4 PURGE COVER

The GSE purge cover still is installed on the instrument. AIMS measurements were made at data points 30A through 42A. All GSE cover values are within ICD-02 allowed tolerances. The GSE cover configuration was measured using a micrometer, and similarly, the flight cover was measured. Appendix F contains the data. With the exception of the P1 direction, the flight cover agrees with the GSE cover dimensions to within 0.01 inch. By adding 0.01 inch to the GSE cover P2 and P3 dimensions, the flight cover will be well within allow tolerances. In the P1 direction, the flight cover and a shim was found to be 0.93 inch thicker than the GSE cover. Adding this value to data points 41A and 42A produces estimated P1 locations of 0.474 and 0.471 inch respectively. The ICD allowed

value is 0.4 max., so the front surface of the flight cover exceeds the requirements by as much as 0.074 inch. A16-ST-1127

There are no sharp edges on the cover in the corner area. Thus, contact with any sagging MLI on the OTA should be no problem during installation. As shown in Figure 6-7, NICMOS is longer than FOS, so comparison with the two instruments will be no help. The original ICD-02 allowed location was 0.5 inch max., so the current values are within the original ICD.

An analysis was performed to determine whether the aperture cover overlaps the focal plane deck hub. Appendix H contains the results of this analysis. The cover was found to be approximately 0.87 inch within the hub opening at its nearest point in the P2 and P3 directions, so their should be no MLI, wires, or other structure in this area. As such, there should be no interference during installation.

8.5 LATCHES

The same latch tools as were used for the original measurements were used again to metrologize the locations of the "B" and "C" latch points. The discussions of Section 7.1 still are valid with modifications to the "B" latch tool. During the measurements of the STIS instrument on 10/11/96 it was discovered that the "B" latch tool was damaged. On 10/15/96 the tool was taken to GSFC building 5 where it was recalibrated on the "GAMMA" coordinate measuring machine. Appendix G contains the data. The tooling ball decenter with respect to the cone was found to by 0.0016 inch as was measured before, and the despace of the ball center to the latch spherical bearing center was increased from 0.0085 inch to 0.0096 still in the -P1 direction. The NICMOS A-to-B latch separation was found to be 85.738 inches (data point 14A) whereas it was 85.727 inches in the original data set (data point 178). This 0.011 inch position difference is well beyond the 2σ measurement uncertainty of 0.005 inch but still is well within the allowed position value of 85.727 +/- 0.036 inch. The tool bearing surface was partially damaged and was touched up with an abrasion during recalibration to remove burrs. Residual damage may account for the tool not seating in the latch as it did previously.

The "A" latch was measured using the "spherical fit" routine of AIMS rather than measuring the latch center directly. The NICMOS latch surface is not polished sufficiently to permit direct measurement. Data point 29A contains the latch center which was used as the origin for the coordinate system. As a double check, a measurement was made on the latch flat front surface which is controlled to 0.437 +/- 0.001 inch from the latch center. The predicted latch center using this measurement, point 43A, agreed with point 29A to within 0.001 inch in the P1 direction which is the only direction which could be checked. Therefore, there is high confidence that the spherical fit technique for determining the latch center is sufficiently accurate for envelope verification.

REQUEST FOR DEVIATION/WAIVER (RFD/RFW)

1. DATE (YYMMDD): 96/10/14

ST-ICD-02E
FEBRUARY 1996

2. IRN 112
18 DECEMBER 1996

PUBLIC REPORTING BURDEN FOR THIS COLLECTION OF INFORMATION IS ESTIMATED TO AVERAGE 2 HOURS PER RESPONSE, INCLUDING THE TIME FOR REVIEWING INSTRUCTIONS, SEARCHING EXISTING DATA SOURCES, GATHERING AND MAINTAINING THE DATA NEEDED, AND COMPLETING AND REVIEWING THE COLLECTION OF INFORMATION. SEND COMMENTS REGARDING THIS BURDEN ESTIMATE OR ANY OTHER ASPECT OF THIS COLLECTION OF INFORMATION, INCLUDING SUGGESTIONS FOR REDUCING THIS BURDEN, TO WASHINGTON HEADQUARTERS SERVICES, DIRECTORATE FOR INFORMATION OPERATIONS AND REPORTS, 1215 JEFFERSON DAVIS HIGHWAY, SUITE 1204, ARLINGTON, VA 22202-4302, AND TO THE OFFICE OF MANAGEMENT AND BUDGET, PAPERWORK REDUCTION PROJECT (0704-0188), WASHINGTON, D.C. 20503.

PLEASE DO NOT RETURN YOUR COMPLETED FORM TO EITHER OF THESE ADDRESSES. RETURN COMPLETED FORM TO THE GOVERNMENT ISSUING CONTRACTING OFFICER FOR THE CONTRACT/PROCURING ACTIVITY NUMBER LISTED IN ITEM 2 OF THIS FORM.

3. DODAAC

4. ORIGINATOR
a. Ball Aerospace Technologies Corp
John F. Meadows

b. ADDRESS (Street, City, State, Zip code)
P.O. Box 1062
Boulder, CO 80306-1062

5. (X one)
O Deviation X Waiver

6. (X one)
Minor X Major O Critical

7. DESIGNATION FOR DEVIATION/WAIVER

a. MODEL/TYPE	b. CAGE CODE	c. SYS. DESIG.	d. DEV/WAIVER NO.
NICMOS	13993	IN0048	IN0048-W-016

8. BASELINE AFFECTED
O Functional O Allocated
X Product

9. OTHER SYSTEM CONFIGURATION ITEMS AFFECTED
O YES X NO

10. TITLE OF DEVIATION/WAIVER
Lateral Stiffness

11. CONTRACT NO. AND LINE ITEM
U of A Contract 172984

12. PROCURING CONTRACTING OFFICER
a. NAME (First, Middle Initial, Last): Linda Steen
b. CODE: 286
c. TELEPHONE NO: 520/621-6068

13. CONFIGURATION ITEM NOMENCLATURE
SI NICMOS

14. CLASSIFICATION OF DEFECT
a. CD NO
b. DEFECT NO.
c. DEFECT CLASSIFICATION: O MINOR X MAJOR O CRITICAL

15. NAME OF LOWEST PART/ASSEMBLY AFFECTED
NICMOS Instrument

16. PART NO. OR TYPE DESIGNATION
517000-500

17. EFFECTIVITY

18. RECURRING DEVIATION/WAIVER
O YES X NO

19. EFFECT ON COST/PRICE
None if Approved

20. EFFECT ON DELIVERY SCHEDULE
None if Approved

21. EFFECT ON INTEGRATED LOGISTICS SUPPORT, INTERFACE OR SOFTWARE
None

22. DESCRIPTION OF DEVIATION/WAIVER
Reference Interface Control Document ST-ICD-02E paragraph 4.5.2, Figure 4.5-3. USE AS IS: From model survey testing, the frequency of the generalized mass exceeds the limits defined in the ICD.

23. NEED FOR DEVIATION/WAIVER
Redesign of the enclose would incur substantial cost and schedule impact. Frequency of NICMOS generalized mass is similar to that of other HST instruments that have flown, yet not met this requirement. Verification Acceptance Review (VAR) results show positive margins of safety are maintained.

24. CORRECTIVE ACTION TAKEN
None

25. SUBMITTING ACTIVITY
a. TYPED NAME (First, Middle Initial, Last): John F. Meadows
b. TITLE: Project Engineer Quality Assurance
c. SIGNATURE: Dave Fiel

26. APPROVAL/DISAPPROVAL
a. RECOMMEND O APPROVAL O DISAPPROVAL

b. APPROVAL
X APPROVED O DISAPPROVED

c. GOVERNMENT ACTIVITY
Deputy Associate Director of Flight Projects for HST

d. TYPE NAME (First, Middle Initial, Last): James S. Barrowman
e. SIGNATURE: James S. Barrowman
f. DATE SIGNED (YYMMDD): 961218

g. APPROVAL w/ Change
X APPROVED O DISAPPROVED

h. GOVERNMENT ACTIVITY
Contracting Officer

i. TYPED NAME (First, Middle Initial, Last): Gifford P. Moak
j. SIGNATURE: Gifford P. Moak
k. DATE SIGNED (YYMMDD): 970124

DD Form 1694, APR 92

(NEW PAGE CREATED BY IRN 112)

REQUEST FOR DEVIATION/WAIVER (RFD/RFW)

1. DATE (YYMMDD): 96/12/23

2. NUMBER

Public reporting burden for this collection of information is estimated to average 2 hours per response, including the time for reviewing instructions, searching existing data sources, gathering and maintaining the data needed and completing and reviewing the collection of information. Send comments regarding this burden estimate or any other aspect of this collection of information, including suggestions for reducing this burden to Washington Headquarters Services, Directorate for Information Operations and Reports, 1215 Jefferson Davis Highway, Suite 1204, Arlington, VA 22202-4302, and to the Office of Information and Regulatory Affairs, Office of Management and Budget, Washington, D.C. 20503

PLEASE DO NOT RETURN YOUR COMPLETED FORM TO EITHER OF THESE ADDRESSES. RETURN COMPLETED FORM TO THE GOVERNMENT ISSUING CONTRACTING OFFICER FOR THE CONTRACT/PROCURING ACTIVITY NUMBER LISTED IN ITEM 2 OF THIS FORM

3. DODAAC

4. ORIGINATOR

a. Ball Aerospace Technologies Corp

David L. Fish

b. ADDRESS (Street, City, State, Zip code)
P.O. Box 1062
Boulder, CO 80306-1062

5. (X one) X Deviation O Waiver

6. (X one) O Minor X Major O Critical

7. DESIGNATION FOR DEVIATION/WAIVER

a. MODEL/TYPE	b. CAGE CODE	c. SYS. DESIG.	d. DEV/WAIVER NO.
NICMOS	13993	IN0048B	IN0048-0-004A

8. BASELINE AFFECTED: O Functional X Allocated O Product

9. OTHER SYSTEM CONFIGURATION ITEMS AFFECTED: O YES X NO

10. TITLE OF DEVIATION/WAIVER
NICMOS Weight (Deviation from ST-ICD-02E)

11. CONTRACT NO. AND LINE ITEM
U of A Contract 172984

12. PROCURING CONTRACTING OFFICER
a. NAME (First, Middle Initial, Last): Linda Steen
b. CODE: 286
c. TELEPHONE NO: 520/621-6068

13. CONFIGURATION ITEM NOMENCLATURE
Near-Infrared Camera and Multi-Object Spectrometer
NICMOS

14. CLASSIFICATION OF DEFECT

a. CD NO	b. DEFECT NO.	c. DEFECT CLASSIFICATION
		N/A O MINOR O MAJOR O CRITICAL

15. NAME OF LOWEST PART/ASSEMBLY AFFECTED
NICMOS

16. PART NO. OR TYPE DESIGNATION
517000-500

17. EFFECTIVITY
All

18. RECURRING DEVIATION/WAIVER: O YES X NO

19. EFFECT ON COST/PRICE
None if Approved

20. EFFECT ON DELIVERY SCHEDULE
None if Approved

21. EFFECT ON INTEGRATED LOGISTICS, SUPPORT, INTERFACE OR SOFTWARE
None

22. DESCRIPTION OF DEVIATION/WAIVER Allow NICMOS maximum fly-away weight to be 870 pounds (a 1% margin on preliminary measurement of 861.6 pounds).

23. NEED FOR DEVIATION/WAIVER
Incorporate actual measurements: see Jim Metzger memos, attached.

24. CORRECTIVE ACTION TAKEN
N/A

25. SUBMITTING ACTIVITY

a. TYPED NAME (First, Middle Initial, Last)	b. TITLE	c. SIGNATURE
David L. Fish	Product Assurance Manager	Dave Fish

26. APPROVAL/DISAPPROVAL
a. RECOMMEND O APPROVAL O DISAPPROVAL

b. APPROVAL: X APPROVED O DISAPPROVED

c. GOVERNMENT ACTIVITY
Deputy Associate Director of Flight Projects for HST

d. TYPE NAME (First, Middle Initial, Last)	e. SIGNATURE	f. DATE SIGNED (YYMMDD)
James S. Barrowman	James S. Barrowman	1/13/97 970113

g. APPROVAL: X APPROVED O DISAPPROVED

h. GOVERNMENT ACTIVITY
Contracting Officer

i. TYPED NAME (First, Middle Initial, Last)	j. SIGNATURE	k. DATE SIGNED (YYMMDD)
Gifford P. Moak	Gifford P. Moak	970124

DD Form 1694, APR 92 — Previous editions are obsolete.

(NEW PAGE CREATED BY IRN 113)

NICMOS WEIGHT AND CG

The Ball mass properties report IN0048-1027L, dated 9/16/96, shows the NICMOS weight at 818 lb, plus a GFE weight of 31 lb, which gives a total predicted instrument weight of 849 lb. However, this GFE list included 10 lb for an auxiliary handle which was not present during the mass properties measurements at GSFC, so that the calculated weight for the NICMOS configuration when lifted at GSFC is 839 lb. With the 12 lb L-handle added, the total tabulated fly-away weight for NICMOS becomes 851 lb based on calculations from the above report.

The actual measured weight of NICMOS at GSFC, including all GFE except for the L-handle, was 849.6 lb. When 12 lb is added for the actual weight of the L-handle, the total NICMOS fly-away weight is projected to be 861.6 lb.

Previously, a waiver to the ICD requirements was granted to allow a NICMOS weight, to be carried on the latches, of up to 852 lb including all GFE. Again, this GFE allocated 10 lb for an auxiliary handle, which is now known as the L-handle, and actually weighs 12 lb.

Based on the measured data, the NICMOS exceeds the allowable weight limit by 9.6 lb, which is greater than the weight reporting tolerance of +/- 5 lb provided in the ICD.

Both the tabulated and the measurement-derived Center of Gravity calculations show the CG to be within the envelope specified in the ICD for an instrument of this weight.

MEASURED CG: (w/o L-handle) P1 = -46.82, P2 = 11.87, P3 = 11.91 INCHES

CURRENT ICD SPECIFICATION: P1 = -20 to -50 and P2,3 = 12 +/-1 INCHES

SUMMARY: The delivered NICMOS weighs 849.6 lb consisting of 828.6 lb for SI plus 21 lb for GFE unique to NICMOS. The L-handle adds 12 lb but is neither SI nor GFE per ICD-02E; and is charged to Crew Aids and Tools. But it is still physically attached to the instrument and was also included in the original waiver request. Therefore, with the L-handle installed, the total instrument fly-away weight becomes 861.6 lb to be carried on the latches. This exceeds the current waiver which allows 852 lb to be carried on the latches.

The most recent Flight Loads Analysis has accounted for the L-handle and indicates that more than adequate strength margins exist to accommodate this total expected instrument fly-away weight.

J. Metzger
12/6/96

(NEW PAGE CREATED BY IRN 113)

National Aeronautics and
Space Administration

Goddard Space Flight Center
Greenbelt, MD 20771

722.1

11/21/96

Reply to Attn of:

TO: P. Geithner/NICMOS Instrument Manager/442

FROM: J. Metzger/Mechanical Systems Engineer/722

SUBJECT: Results of NICMOS Weight and CG Measurement at GSFC.

REF: Mass Properties Status Report for the Near-Infrared Camera and Multi-Object Spectrometer, IN0048-1027L, Ball Aerospace, September 16, 1996.

REF: Memo to S. DePalo from J. Metzger, 10/3/96, Subject: STIS/NICMOS Lifting Sling Special Application, update.

On November 13, 1996, weight and CG measurements were obtained for the NICMOS Instrument per Work Order Authorization No. 2517. While in the cleanroom, the instrument was lifted from its dolly in the square configuration by means of the appropriate certified lifting sling per procedure P-442-1417 but with load cells added in all four links between the sling and its attachment to the GSE lift points on the instrument. With the instrument suspended in this manner, the sling was adjusted to level the instrument and to remove all load in the link attached diagonally opposite to the GSE lifting aid on the chamfered corner so as to produce a determinant three point support condition. At this point the load cell readings were recorded and the instrument was returned to the dolly. The entire operation was then repeated after rolling the instrument to place the other lateral axis vertical.

The configuration of the instrument included all flight hardware except for two substitute covers which are to be replaced with equivalent flight items during launch site processing; and all GFE was installed on the instrument except for the L-handle. In addition, the GSE included in this lift consisted of 5 connector shorting plugs, 4 hoist rings, 2 ground strap clips, and a special lifting aid at the chamfered corner. The approximate net weight of this GSE was 3.4 lb.

The first lift was conducted with the P3 axis vertical and the instrument was leveled to within 1/2 degree. The readings from the three supporting load cells totaled 853 lb, which after adjusting for the GSE, gives an instrument weight of 849.6 lb; and based on the distribution of the loads, the CG was calculated to be at P1 = -46.82 inches and P2 = 11.87 inches with respect to the center of the A fitting ball.

The second lift was conducted with the P2 axis vertical and the instrument leveled to within 1/2 degree. The readings from the three supporting load cells again totaled 853 lb, and the CG was calculated to be P1 = -46.82 inches and P3 = 11.91 inches with an instrument weight of 849.6 lb after subtracting GSE.

A load cell was also placed in the load line near the crane hook to give a measure of the total weight lifted. After compensating for the weight of the sling assembly and shackles, the readings from this load cell were 856 lb for both lifting operations. With the subtraction for GSE and an allowance of approximately 3 lb for purge line, ground strap, load cell cable, and tag line for the elevated sling, this reading is consistent with the sum of the values from the individual load cells supporting the instrument.

The information obtained during the above measurements compares reasonably well with the model data presented in the Ball Mass Properties Status Report for NICMOS after an adjustment is made regarding the weight of GFE items in order to make the report consistent with the configuration of the instrument for the measured data. When the 10 lb allocated for the auxiliary handle in the GFE list is removed, the tabulated instrument weight is reduced from 849 to 839 lb, representing the as-tested configuration for NICMOS. However, the actual weight of the L-handle, which was not present during the measurements, is 12 lb, and produces a total calculated fly-away weight of 851 lb for the instrument. Based on the measured weight, the addition of the L-handle will increase the predicted fly-away weight to 861.6 lb.

The NICMOS was granted a waiver to the requirements of ST-ICD-02E which now allows a total fly-away weight of up to 852 lb including all GFE. It appears that this limit may be exceeded once the L-handle is installed. No waiver was requested for CG location relief and the calculations all indicate that the CG is within the current ICD envelope which is P1 = -20 to -50 and P2,P3 = 12 +/- 1 inches.

It should be noted that this test was not intended to be an official weighing of the instrument but rather a verification of the model used for loads and frequency calculations for the carrier. The data indicate adequate correlation with the model, and the apparent discrepancy between the two total fly-away weight figures can be attributed to the accumulation of many small individual errors inherent in each method of weight determination. For the measured data, the total error developed from the combined tolerances from multiple load cells in addition to the angularity of the link attached to the GSE lifting aid is expected to be less than 5 lb. Consequently, the accuracy of the calculations for the CG from the load cell data is estimated to be +/- 1/4 inch and is suitable for the intended purpose.

Finally, it is recommended that an official weight be obtained at some convenient time, using a single load cell, in order to resolve any issue regarding accuracy or the need for revising the current weight waiver. In summary, based on the measured data from this test, the total weight of the NICMOS flight instrument, with GFE and without GSE or the L-handle, is 849.6 lb, and the CG is at P1 = -46.82, P2 = 11.87, and P3 = 11.91 inches. The projected fly-away weight, with the L-handle, is 861.6 lb.

James R. Metzger

CC:

J. Cooper/750
J. Pepe/754
M. Brumfield/680
J. Decker/704
F. Kallmeyer/442
W. Sours/442
J. Ryan/722
G. Frazier/722
M. Urban/740
J. Sills/LM
J. Ryan/LM
File/722

10.9 Advanced Camera for Surveys (ACS) Deviations and Waivers

IRN 114

The Advanced Camera for Surveys (ACS), STE-47, is relieved from the requirements of this ICD to the extent shown on the NASA approved deviation and waiver requests listed below and included on the following pages.

		Page	
10.9.1	IN0077-W-003A, ACS Weight Waiver	10.9-2	
10.9.2	IN0077-W-004, ACS Power Waiver	10.9-3	
10.9.3	IN0077-W-005, ACS Enclosure Envelope Waiver	10.9-8	IRN 115
10.9.4	IN0077-D-001A, ACS Connector Keyway Alignment Deviation	10.9-14	IRN 116
10.9.5	IN0077-W-016, ACS SI Latch Magnetic Field Exceedance Waiver	10.9-24	IRN 118
10.9.6	IN0077-W-021B, ACS "C" Fitting Orientation Waiver	10.9-27	IRN 120
10.9.7	IN0077-W-022A, ACS Guide Blocks - Forward and Aft Waiver	10.9-34	IRN 122
10.9.8	IN0077-W-015F, ACS Axial ORI Static Envelope Exceedances Waiver	10.9-36	IRN 123
10.9.9	IN0077-W-023, ACS Inrush Current Exceedance Waiver	10.9-38	
10.9.10	IN0077-W-020A, ACS EMI/EMC Waiver	10.9-46	IRN 124

REQUEST FOR DEVIATION/WAIVER (RFD/RFW)

1. DATE (YYMMDD): 97/07/22

Form Approved
ST-ICD-02E
27 FEBRUARY 1985
IRN 114
31 OCTOBER 1997

Public reporting burden for this collection of information is estimated to average 2 hours per response, including the time for reviewing instructions, searching existing data sources, gathering and maintaining the data needed and completing and reviewing the collection of information. Send comments regarding this burden estimate or any other aspect of this collection of information, including suggestions for reducing this burden to Washington Headquarters Services, Directorate of Information Operations and Reports, 1215 Jefferson Davis Highway, Suite 1204, Arlington, VA 22202-4302, and to the Office of Information and Regulatory Affairs, Office of Management and Budget, Washington, D.C. 20503

PLEASE DO NOT RETURN YOUR COMPLETED FORM TO EITHER OF THESE ADDRESSES. RETURN COMPLETED FORM TO THE GOVERNMENT ISSUING CONTRACTING OFFICER FOR THE CONTRACT/PROCURING ACTIVITY NUMBER LISTED IN ITEM 2 OF THIS FORM.

2. DODAAC

3. ORIGINATOR

a. Ball Aerospace Technologies Corp

b. ADDRESS (Street, City, State, Zip code)
P.O. Box 1062
Boulder, CO 80306-1062

5. (X one)
O Deviation X Waiver

6. (X one)
O Minor X Major O Critical

7. DESIGNATION FOR DEVIATION/WAIVER

a. MODEL/TYPE	b. CAGE CODE	c. SYS. DESIG.	d. DEV/WAIVER NO.
ACS	13993	IN0077A	IN0077-W-003A

8. BASELINE AFFECTED
O Functional X Allocated
O Product

9. OTHER SYSTEM CONFIGURATION ITEMS AFFECTED
O YES X NO

10. TITLE OF DEVIATION/WAIVER
ACS WEIGHT

11. CONTRACT NO. AND LINE ITEM
NAS5-32864

12. PROCURING CONTRACTING OFFICER
a. NAME (First, Middle Initial, Last) Patricia Fitzgerald
b. CODE 214.1
c. TELEPHONE NO (301) 286-2271

13. CONFIGURATION ITEM NOMENCLATURE
ADVANCED CAMERA FOR SURVEYS
ACS

14. CLASSIFICATION OF DEFECT
a. CD NO N/A
b. DEFECT NO. N/A
c. DEFECT CLASSIFICATION N/A
O MINOR O MAJOR O CRITICAL

15. NAME OF LOWEST PART/ASSEMBLY AFFECTED
ACS

16. PART NO. OR TYPE DESIGNATION
535000-500

17. EFFECTIVITY
Serial Number 001 and up

18. RECURRING DEVIATION/WAIVER
O YES O NO

19. EFFECT ON COST/PRICE
None if approved

20. EFFECT ON DELIVERY SCHEDULE
None if approved

21. EFFECT ON INTEGRATED LOGISTICS, SUPPORT, INTERFACE OR SOFTWARE
Interface with SIPE and carrier (ORUE) to be evaluated

22. DESCRIPTION OF DEVIATION/WAIVER
The maxium weight of the ACS, not including the GFE, will be 821 lbs., and the center of gravity will be held within the following range: P1 = -20 to -50 in., P2 = 12 +\- 1 in., P3 = 12 +\- 1 in.

23. NEED FOR DEVIATION/WAIVER
Paragraph 4.5.3.1 (weight) of ST-ICD-02E requires a Max. weight of 760 lb with C.G. at P1 = -20 to -50 in, P2 = 12 +\- 1 in, P3 += 12 +\- 1 in

24. CORRECTIVE ACTION TAKEN

25. SUBMITTING ACTIVITY

a. TYPED NAME (First, Middle Initial, Last) John F. Meadows
b. TITLE Product Assurance Manager
c. SIGNATURE John F. Meadows

26. APPROVAL/DISAPPROVAL
a. RECOMMEND O APPROVAL O DISAPPROVAL

b. APPROVAL
X APPROVED O DISAPPROVED

c. GOVERNMENT ACTIVITY
Deputy Associate Director of Flight Projects for HST

d. TYPE NAME (First, Middle Initial, Last) George Morrow
e. SIGNATURE [signature]
f. DATE SIGNED (YYMMDD) 971031

g. APPROVAL
X APPROVED O DISAPPROVED

h. GOVERNMENT ACTIVITY
CONTRACTING OFFICER

i. TYPED NAME (First, Middle Initial, Last) Gifford P. Moak
j. SIGNATURE Gifford P. Moak
k. DATE SIGNED (YYMMDD) 971105

DD Form 1694, APR 92

(NEW PAGE CREATED BY IRN 114)

REQUEST FOR DEVIA . JN/WAIVER (RFD/RFW)

1. DATE (YYMM
97/04/09

NUMBER

Public reporting burden for this collection of information is estimated to average 2 hours per response, including the time for reviewing instructions, searching existing data sources, gathering and maintaining the data needed and completing and reviewing the collection of information. Send comments regarding this burden estimate or any other aspect of this collection of information, including suggestions for reducing this burden to Washington Headquarters Services, Directorate of Information Operations and Reports, 1215 Jefferson Davis Highway, Suite 1204, Arlington, VA 22202-4302, and to the Office of Information and Regulatory Affairs, Office of Management and Budget, Washington, D.C. 20503

PLEASE DO NOT RETURN YOUR COMPLETED FORM TO EITHER OF THESE ADDRESSES. RETURN COMPLETED FORM TO THE GOVERNMENT ISSUING CONTRACTING OFFICER FOR THE CONTRACT/PROCURING ACTIVITY NUMBER LISTED IN ITEM 2 OF THIS FORM

3. DODAAC

4. ORIGINATOR
a. Ball Aerospace Technologies Corp

b. ADDRESS (Street, City, State, Zip code)
P.O. Box 1062
Boulder, CO 80306-1062

5. (X one)
O Deviation X Waiver

6. (X one)
O Minor X Major O Critical

7. DESIGNATION FOR DEVIATION /WAIVER

a. MODEL/TYPE	b. CAGE CODE	c. SYS. DESIG.	d. DEV/WAIVER NO.
ACS	13993	IN0077A	IN0077-W-004

8. BASELINE AFFECTED
O Functional X Allocated
O Product

9. OTHER SYSTEM CONFIGURATION ITEMS AFFECTED
O YES X NO

10. TITLE OF DEVIATION/WAIVER
ACS POWER

11. CONTRACT NO. AND LINE ITEM
NAS5-32864

12. PROCURING CONTRACTING OFFICER
a. NAME (First, Middle Initial, Last) Patricia Fitzgerald
b. CODE 214.1
c. TELEPHONE NO (301) 286-2271

13. CONFIGURATION ITEM NOMENCLATURE
ADVANCED CAMERA FOR SURVEYS
ACS

14. CLASSIFICATION OF DEFECT
a. CD NO N/A
b. DEFECT NO. N/A
c. DEFECT CLASSIFICATION N/A
O MINOR O MAJOR O CRITICAL

15. NAME OF LOWEST PART/ASSEMBLY AFFECTED
ACS

16. PART NO. OR TYPE DESIGNATION
535000-500

17. EFFECTIVITY
Serial Number 001 and up

18. RECURRING DEVIATION/WAIVER
O YES O NO

19. EFFECT ON COST/PRICE
None if approved

20. EFFECT ON DELIVERY SCHEDULE
None if approved

21. EFFECT ON INTEGRATED LOGISTICS, SUPPORT, INTERFACE OR SOFTWARE

22. DESCRIPTION OF DEVIATION/WAIVER
For a cold HST orientation, the average operate power is 258 watts with peaks to 280 watts (2 min), for safe condition in a cold HST the power required is 100 watts (Ref. SER-THM-017) and update memo V3012-GBJ-97.02 dated 97/03/31.

23. NEED FOR DEVIATION/WAIVER
Paragraph 4.6.1.1.4.2 and 4.7 of ST-ICD-02E requires average orbital power of 150 watts, peak power 250 watts (2 min), 174 watts max as part of 150 average and 58 watts hold power.

24. CORRECTIVE ACTION TAKEN
Not applicable

25. SUBMITTING ACTIVITY

a. TYPED NAME (First, Middle Initial, Last)	b. TITLE	c. SIGNATURE
John F. Meadows	Product Assurance Manager	John F. Meadows

26. APPROVAL/DISAPPROVAL
a. RECOMMEND O APPROVAL O DISAPPROVAL

b. APPROVAL
XX APPROVED O DISAPPROVED

c. GOVERNMENT ACTIVITY
Deputy Associate Director of Flight Projects for HST

d. TYPE NAME (First, Middle Initial, Last)	e. SIGNATURE	f. DATE SIGNED (YYMMDD)
George Morrow	George Morrow	971031

g. APPROVAL
XX APPROVED O DISAPPROVED

h. GOVERNMENT ACTIVITY
GIFFORD P. MOAK, CONTRACTING OFFICER

i. TYPED NAME (First, Middle Initial, Last)	j. SIGNATURE	k. DATE SIGNED (YYMMDD)
Gifford P. Moak	Gifford P. Moak	971105

Ball Aerospace Systems Division

System Engineering Report

REPORT NO: THM-017 DATE: 21 Jan 97 SHEET 1 of 3

PROJECT NAME	CAGE CODE	CII: PC0016A
ACS	13993	PROJECT CODE: 2314

TITLE
LVPS QUIESCENT POWER USAGE

PREPARED BY	DATE	CHECKED BY	DATE	APPROVED BY	DATE
Greg Johnson ✓	21 Jan 97	Bob Poley ✓	21 Jan 97	Phil Christon ✓	21 Jan 97

KEY WORDS: LVPS, power, quiescent

Statement of Investigation

The purpose of this SER is to document the calculation of Low Voltage Power Supply (LVPS) power, and how that leads to an instrument power consumption table.

The documentation begins with the assumptions for quiescent LVPS power, meaning that power dissipated just to maintain the instrument in an operate mode. Also included in assumptions are values for heater power and 4 stage TEC power dissipation for various instrument configurations.

Following that are calculations of LVPS power dissipation for these various heater powers and 4 stage TEC powers. Finally, all the LVPS power is summed, and a table is presented showing instrument power dissipation in Cold and Nominal Hold and Operate.

Conclusions

The LVPS dissipates between 100 and 110 watts in the different operate states, and 18-24 watts in hold states. This leads to overall instrument power consumption of 265 watts in Cold Operate and 101 watts in Cold Hold. While this power will continue to be subject to change as the design matures, this analysis represents the first in depth study of the electrical/thermal interaction of the individual subsystems at the system level.

DISTRIBUTION:

① Cover sheet
② Cover & Main text
③ Cover, Main text & Appendices

BATC:
② Ball Tech Library (AD-1)
② D. Allshlo (CO-6)
① M. Olorunsola (CO-6)
JHU
GSFC
STSCI

ACS:
② P. Volmer (FA-3)
② R. Stocker (FA-3)
② E. Aasted (FA-3)
② B. Slusher (FA-3)
② B. Woodruff (AR-1)
② R. Johnson (FA-3)
② G. Johnson (CO-6)
② P. Christon (FA-3)
② B. Burmester (FA-3)
② T. LaJeunesse (FA-3)

THM-17 LVPS Quiescent Power Usage

Assumptions:

1. In hold mode, 8 watts of LVPS power is used (3 watts plus 5 watts of losses) other than heater usage losses.

2. LVPS1 has 24.2 watts of quiescent operate power.

3. LVPS2 has 27.7 watts of quiescent operate power not counting heater converter power and the associated diodes. This includes 11.45 watts for the two stage TEC converter providing 3.5 amps at 4 volts and 2.5 watts per mechanism converter.

4. LVPS3 has 18.6 watts of quiescent operate power not counting the two 4 stage TEC converters, their transistors, and two supporting resistors each. This does include 11.7 watts for the two CEB converters based on 21 watts in each box. This is a one watt increase per box over STIS and represents a total growth of 0.5 watts of converter losses from the STIS-like 11.2 watts.

5. Instrument performance as follows: (I/F means active interface plate)

Power (W)	Hot Op		Nominal Op		Cold Op		Nom Hold		Cold Hold	
Temp (°C)	I/F	no I/F	I/F	no I/F	I/F	no I/F	I/F	no I/F	I/F	no I/F
Htrs + contrl	15	4	28	15	42	28	42	39	72	68
HRC TEC	10	18	7	14	5	10				
WFC 4 TEC	15	20	9	23	5	12				
WFC temp	-83	-78	-83	-83	-83	-83				

LVPS2 Power:

Heater Converter Calculation at 28V
(from Thrmmeas.xls, Chart 1)

Power (W)	Hot Op		Nominal Op		Cold Op		Nominal Hold		Cold Hold	
	I/F	no I/F	I/F	no I/F	I/F	no I/F	I/F	no I/F	I/F	no I/F
Power Out	7.5	2.0	14.0	7.5	21.0	14.0	21.0	20.5	36.0	34.0
Efficiency (%)	65	50	80	65	82	80	82	82	84	84
Convrter Pwr	4.0	2.0	3.5	4.0	4.6	3.5	4.6	4.5	6.9	6.5
Diode Power	0.2	0.1	0.4	0.2	0.6	0.4	0.6	0.6	1.1	1.0
Power Sum	4.2	2.1	3.9	4.2	5.2	3.9	5.2	5.1	8.0	7.5
2 Converters	8.4	4.2	7.8	8.4	10.4	7.8	10.4	10.2	16.0	15.0
LVPS2 Total	36.1	31.9	35.5	36.1	38.1	35.5	10.4	10.2	16.0	15.0

Note: All numbers with "power out" below 15 watts are derived from STIS predictions, not measured values.

TEC Converter Calculation
(from Tccnvefc.xls, Chart 1)

LVPS3 Power:

Power (W)	Hot Op		Nominal Op		Cold Op	
Temp (°C)	I/F	no I/F	I/F	no I/F	I/F	no I/F
WFC 4 Hot	15.0	20.0	9.0	23.0	5.0	12.0
Converter Power	12.9	14.3	11.2	15.3	10.2	12.2
Transistor Power	0.5	0.6	0.3	0.7	1.7	0.4
TEC current	3.16	3.31	2.43	3.91	1.82	2.83
Resistor Power	0.5	0.5	0.2	0.8	0.2	0.4
HRC 4 Hot	10.0	18.0	7.0	14.0	5.0	10.0
Converter Power	11.6	13.7	10.6	12.6	10.2	11.6
Transistor Power	0.3	0.6	1.1	0.4	1.7	0.3
TEC current	2.58	3.46	2.15	3.05	1.82	2.58
Resistor Power	0.3	0.6	0.2	0.5	0.2	0.3
Total for TECs	26.1	30.3	23.6	30.3	24.2	25.2
Total for LVPS3	44.7	48.9	42.2	48.9	42.8	41.8

Note: Resistor power is $2I^2R$, where I=½ TEC current and R=.1 ohm

TOTAL LVPS POWER

Power (W)	Hot Op		Nominal Op		Cold Op		Nominal Hold		Cold Hold	
	I/F	no I/F	I/F	no I/F	I/F	no I/F	I/F	no I/F	I/F	no I/F
LVPS1	24.2	24.2	24.2	24.2	24.2	24.2	8.0	8.0	8.0	8.0
LVPS2	36.1	31.9	35.5	36.1	38.1	35.5	10.4	10.2	16.0	15.0
LVPS3	44.7	48.9	42.2	48.9	42.8	41.8	0	0	0	0
LVPS Total	105	105	102	109	105	102	18	18	24	23

Note: The 8 watts of LVPS hold power is assumed to be on LVPS1 though it is actually distributed over all three boards.

PREDICTED AVERAGE POWER DISSIPATION (WATTS)

Component	Cold Hold	Nominal Hold	Cold Operate	Nominal Operate
RIU A	3	3	3	3
RIU B	2	2	2	2
MEB	0	0	53	53
LVPS	24	18	105	102
WFC CEB	0	0	21	21
WFC TEC	0	0	13	17
HRC CEB	0	0	21	21
HRC TEC	0	0	5	7
SBC (MAMA)	14	0	0	0
Shelf Heaters	58	42	42	28
Total	101	65	265	254
Current Waiver	130	130	235	235
STIS Power	107	77	213	205

Note: Final values use the numbers calculated with an active interface plate.

(NEW PAGE CREATED BY IRN 114)

Memorandum

TO: Bob Slusher

DATE: 31 Mar 97

FROM: Greg Johnson

NO: V3012-GBJ-97.02

SUBJECT: ACS Instrument Power Dissipation

CC: Distribution

The purpose of this Memo is to document the most recent analytical predictions of instrument power dissipation. The Thermal Math Model predicts TEC power dissipation for both HRC and WFC, as well as thermal shelf heater power dissipation. LVPS power dissipation is then calculated based on data provided by Phil Christon.

Future changes to these numbers will be based on completing the thermal shelf design, using new environmental temperatures for Aft Shroud radiative sinks based on new work by Lockheed, and incorporating new Interface Plate limits from specifications to be developed.

Component	Cold Safe	Cold Op	Nom Op	Hot Op
RIU A	3	3	3	3
RIU B	2	2	2	2
MEB	0	53	53	53
LVPS	22	98	95	99
WFC CEB	0	21	21	21
WFC TEC	0	13	17	24
HRC CEB	0	21	21	21
HRC TEC	0	5	7	10
SBC (MAMA)	9	0	0	0
Shelf Heaters	64	42	28	15
Total	100	258	247	248
Current Waiver	130	235	235	235

Notes:

❶ Anneal power is not listed since the design goal is to limit anneal power to less than worst case operate power.

❷ If there were no active interface plate, power would increase based on warmer TEC environments.

❸ MAMA power is off in operate since only two simultaneous detector operation is baselined. MAMA power is less than the sum of HRC CEB power and associated LVPS losses.

Distribution:

Eric Aasted, Phil Christon, Tom LaJeunesse, Ralph Stocker, Paul Volmer

REQUEST FOR DEVIATION /AIVER (RFD/RFW)

1. DATE (YYMMDD): 97/04/22

Public reporting burden for this collection of information is estimated to average 2 hours per response, including the time for reviewing instructions, searching existing data sources, gathering and maintaining the data needed, and completing and reviewing the collection of information. Send comments regarding this burden estimate or any other aspect of this collection of information, including suggestions for reducing this burden to Washington Headquarters Services, Directorate for Information Operations and Reports, 1215 Jefferson Davis Highway, Suite 1204, Arlington, VA 22202-4302, and to the Office of Information and Regulatory Affairs, Office of Management and Budget, Washington, D.C. 20503.

PLEASE DO NOT RETURN YOUR COMPLETED FORM TO EITHER OF THESE ADDRESSES. RETURN COMPLETED FORM TO THE GOVERNMENT ISSUING CONTRACTING OFFICER FOR THE CONTRACT/PROCURING ACTIVITY NUMBER LISTED IN ITEM 2 OF THIS FORM

1. DODAAC:

4. ORIGINATOR
a. Ball Aerospace Technologies Corp

b. ADDRESS (Street, City, State, Zip code)
P.O. Box 1062
Boulder, CO 80306-1062

5. (X one): O Deviation X Waiver

6. (X one): O Minor X Major O Critical

7. DESIGNATION FOR DEVIATION /WAIVER

a. MODEL/TYPE	b. CAGE CODE	c. SYS. DESIG.	d. DEV/WAIVER NO.
ACS	13993	IN0077A	IN0077-W-005

8. BASELINE AFFECTED: O Functional X Allocated O Product

9. OTHER SYSTEM CONFIGURATION ITEMS AFFECTED: O YES X NO

10. TITLE OF DEVIATION/WAIVER
ACS ENCLOSURE ENVELOPE (Axial ORI Static Envelope)

11. CONTRACT NO. AND LINE ITEM
NAS5-32864

12. PROCURING CONTRACTING OFFICER
a. NAME (First, Middle Initial, Last): Patricia Fitzgerald
b. CODE: 214.1
c. TELEPHONE NO: (301) 286-2271

13. CONFIGURATION ITEM NOMENCLATURE
ADVANCED CAMERA FOR SURVEYS
ACS

14. CLASSIFICATION OF DEFECT
a. CD NO: N/A
b. DEFECT NO.: N/A
c. DEFECT CLASSIFICATION: N/A O MINOR O MAJOR O CRITICAL

15. NAME OF LOWEST PART/ASSEMBLY AFFECTED:
ACS

16. PART NO. OR TYPE DESIGNATION
535000-500

17. EFFECTIVITY
Serial Number 001 and up

18. RECURRING DEVIATION/WAIVER: O YES O NO

19. EFFECT ON COST/PRICE
None if approved

20. EFFECT ON DELIVERY SCHEDULE
None if approved

21. EFFECT ON INTEGRATED LOGISTICS, SUPPORT, INTERFACE OR SOFTWARE
NONE

22. DESCRIPTION OF DEVIATION/WAIVER
Increase envelope in both the +P2 and +P3 direction from the center of the A fitting from 29.10 in. to 29.35 in.. The maximum enclosure dimension would change from 34.80 in. Max TYP 2PLCS to 35.05 in. Max TYP 2PLCS. Reference 2314.PCM.97.004 (1/22/97) which communicated the desired changes and was acceptable to proceed by Carolyn Krebs (2/3/97).

23. NEED FOR DEVIATION/WAIVER
The addition of external radiators to the enclosure outboard panels requires additional space.

24. CORRECTIVE ACTION TAKEN
Not applicable

25. SUBMITTING ACTIVITY
a. TYPED NAME (First, Middle Initial, Last): John F. Meadows
b. TITLE: Product Assurance Manager
c. SIGNATURE: John F. Meadows

26. APPROVAL/DISAPPROVAL
a. RECOMMEND O APPROVAL O DISAPPROVAL

b. APPROVAL: X APPROVED O DISAPPROVED
c. GOVERNMENT ACTIVITY: Deputy Associate Director of Flight Projects for HST
d. TYPE NAME (First, Middle Initial, Last): George Morrow
e. SIGNATURE: [signature]
f. DATE SIGNED (YYMMDD): 11/14/97

g. APPROVAL: X APPROVED O DISAPPROVED
h. GOVERNMENT ACTIVITY: GIFFORD P. MOAK Contracting Officer
i. TYPED NAME (First, Middle Initial, Last): Gifford P. Moak
j. SIGNATURE: Gifford P. Moak
k. DATE SIGNED (YYMMDD): 11/18/97

(NEW PAGE CREATED BY IRN 115)

ACS

PROGRAM COORDINATION MEMO

To:	Carolyn Krebs	Program: ACS
From:	Tom LaJeunesse	No: 2314.PCM.97.004
Originated By:	Rich Johnson	Date: 1/22/97
Subject:	Enclosure Dimension Waiver	

Reference:

After evaluation of several ACS radiator design concepts, the accepted design design appears to include the addition of external radiators to the enclosure outboard panels. Therefore, Ball seeks approval to submit a waiver request to the ICD-02 envelope requirements as follows:

Ref Figure 4.3-1 Axial ORI Static Envelope

Dim was: 29.10 MAX
TYP 2 PLCS

Dim requested: 29.35 MAX
TYP 2 PLCS

The 2 PLCS are in the +P2 and +P3 directions from the center of the A fitting.

The maximum enclosure dimension would consequently change as follows:

Dim was: 34.80 MAX
TYP 2 PLCS

Dim requested: 35.05 MAX
TYP 2 PLCS

Action Required: Acknowledge receipt and approve request to submit waiver

Date Required: 2/22/97

Response:

Response Date:

Distribution: R. Johnson, R. Stocker, P. Volmer

SWALES
AEROSPACE

31 January, 1997

MEMO TO: Carolyn Krebs

FROM: Tim Cole

SUBJECT: Enclosure Dimension Waiver

cc: John Decker

I have reviewed the ICD dimensions referred to in Program Coordination Memo No. 2314.PCM.97.004 by Ball Aerospace, dated 1/22/97. It appears that the proposed dimensional exceedance for the ACS will not cause an interference problem since the ACS is replacing the FOC (Bay 3) which was built to larger specifications (ICD-02D).

Whereas the ACS is exceeding the updated ICD-02E requirements (updated 24 March 1995), the FOC was built to comply with the larger envelopes described in ICD-02D (22 December 1982).

The table below summarizes the differences:

	ACS (Ref 1)	ICD-02E (Ref 2)	FOC (Ref 3)	ICD-02D (Ref 4)
"A" to Panel	29.35"	29.10"	29.50"	29.50"
Panel to Panel	35.05"	34.80"	35.28"	35.40"

Reference 1 - Ball Aerospace PCS No. 2314.PCM.97.004
Reference 2 - ICD-02E, dated 24 March 1995
Reference 3 - SMR-1092 HST Metrology Handbook, dated 18 December 1992
Reference 4 - ICD-02D, dated 22 December 1982

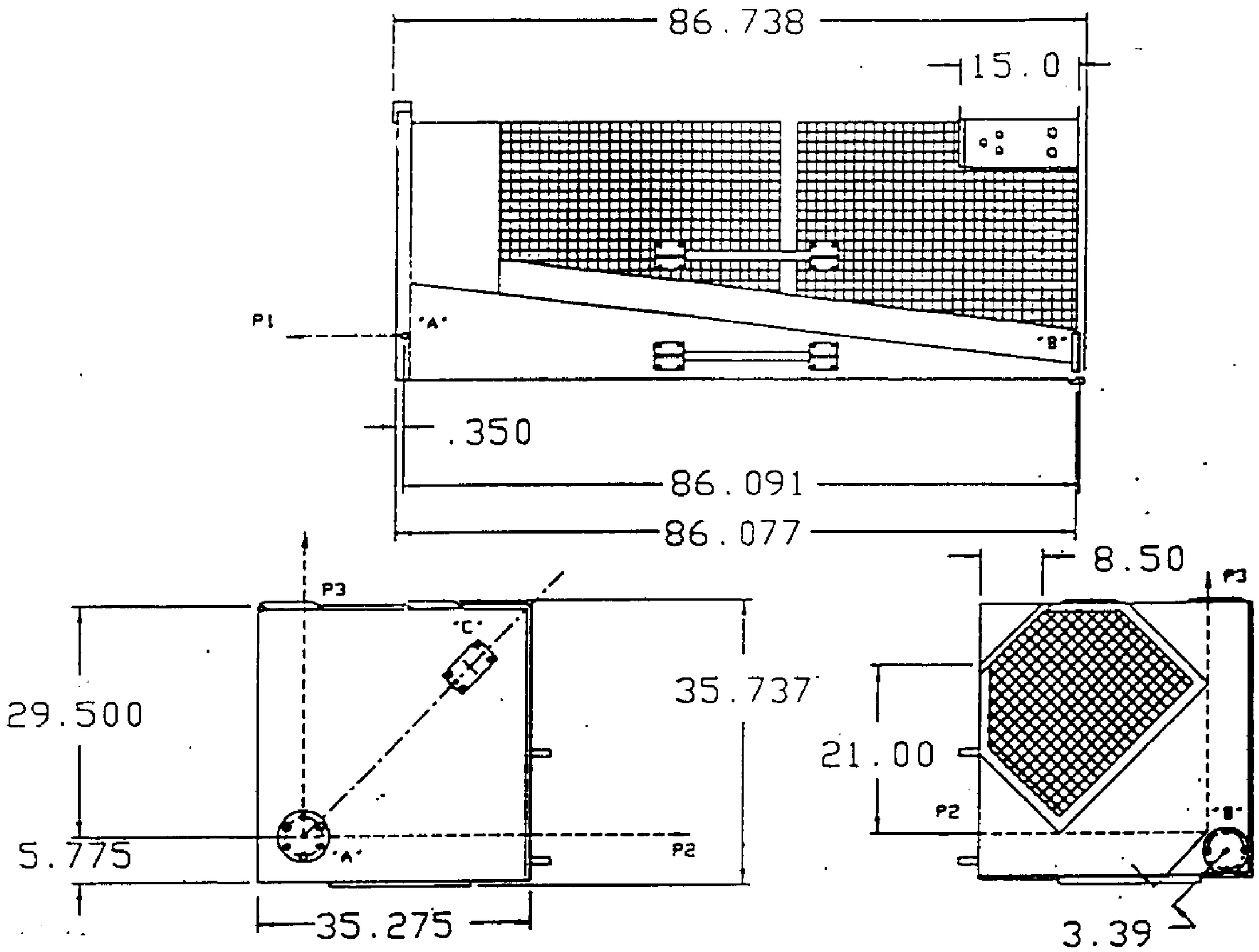

Figure 3.2-17 FOC Envelope

Waiver IN0077-W-005
Page 5 of 6

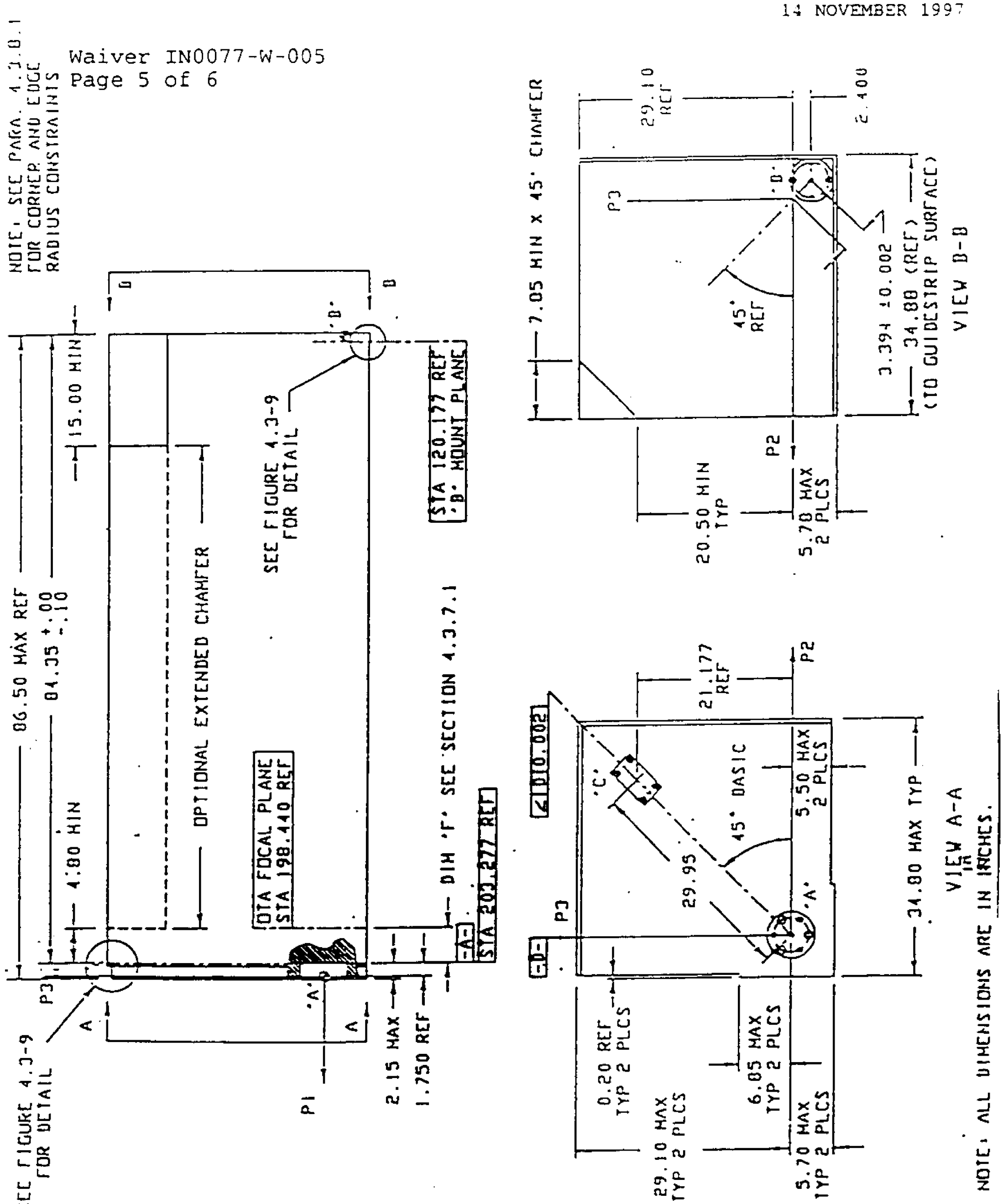

Figure 4.3-1 Axial ORI Static Envelope
(Supersedes Page 4.3-2 dated 29 May 1992)

(NEW PAGE CREATED BY IRN 115)

Waiver IN0077-W-005
Page 6 of 6

ST-ICD-02D
22 December 1982

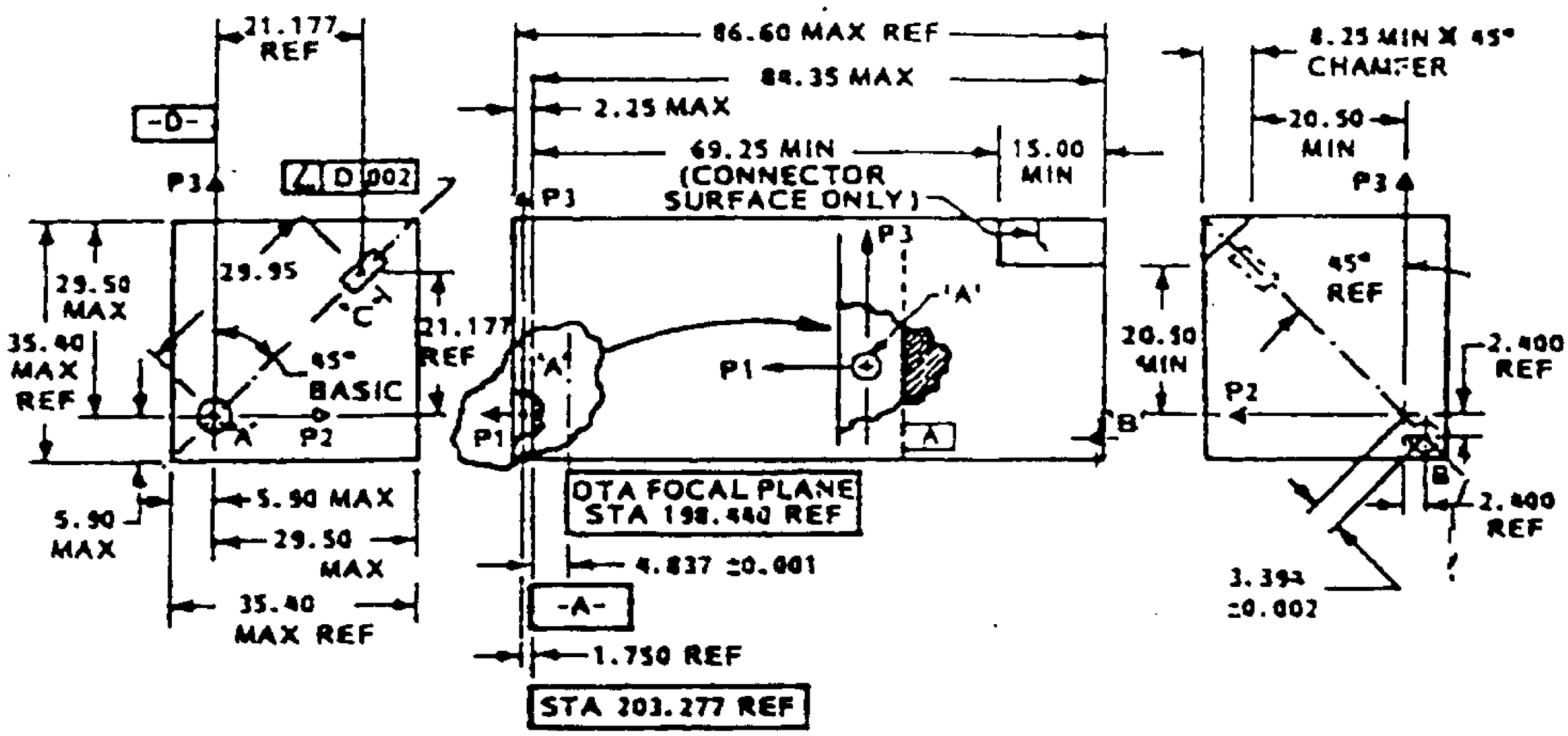

REQUEST FOR DEVIATION/WAIVER (RFD/RFW)

1. DATE (YYMMDD): 97/11/11

2. NUMBER

Public reporting burden for this collection of information is estimated to average 2 hours per response, including the time for reviewing instructions, searching existing data sources, gathering and maintaining the data needed and completing and reviewing the collection of information. Send comments regarding this burden estimate or any other aspect of this collection of information, including suggestion for reducing the burden to Washington Headquarters Services, Directorate of Information Operations and Reports, 1215 Jefferson Davis Highway, Suite 1204, Arlington, VA 22202-4302, and to the Office of Information and Regulatory Affairs, Office of Management and Budget, Washington, D.C. 20503.

PLEASE DO NOT RETURN YOUR COMPLETED FORM TO EITHER OF THESE ADDRESSES. RETURN COMPLETED FORM TO THE GOVERNMENT ISSUING CONTRACTING OFFICER FOR THE CONTRACT PROCURING ACTIVITY NUMBER LISTED IN ITEM 2 OF THIS FORM.

3. DODAAC

4. ORIGINATOR
a. John F. Meadows

b. ADDRESS (Street, City, State, Zip code)
a. Ball Aerospace Systems Division
P.O. Box 1062
Boulder, CO 80306

5. (X one)
X Deviation ○ Waiver

6. (X one)
○ Minor X Major ○ Critical

7. DESIGNATION FOR DEVIATION/WAIVER

a. MODEL/TYPE	b. CAGE CODE	c. SYS DESIG	d. DEV/WAIVER NO.
ACS	13993	IN0077A	IN0077-D-001A

8. BASELINE AFFECTED
○ Functional ○ Allocated
X Product

9. OTHER SYSTEM CONFIGURATION ITEMS AFFECTED
○ YES X NO

10. TITLE OF DEVIATION/WAIVER
Connector Keyway Alignment

11. CONTRACT NO. AND LINE ITEM
NAS5-32864

12. PROCURING CONTRACTING OFFICER
a. NAME (First, Middle Initial, Last) Jim Jones
b. CODE 442.0
c. TELEPHONE NO. 301/286-6640

13. CONFIGURATION ITEM NOMENCLATURE
ADVANCED CAMERA FOR SURVEYS (ACS)

14. CLASSIFICATION OF DEFECT
a. CD NO
b. DEFECT NO.
c. DEFECT CLASSIFICATION
○ MINOR X MAJOR ○ CRITICAL

15. NAME OF LOWEST PART/ASSEMBLY AFFECTED
ADVANCED CAMERA FOR SURVEYS (ACS)

16. PART NO. OR TYPE DESIGNATION
535000-500

17. EFFECTIVITY

18. RECURRING DEVIATION/WAIVER
○ YES X NO

19. EFFECT ON COST/PRICE
None

20. EFFECT ON DELIVERY SCHEDULE
None

21. EFFECT ON INTEGRATED LOGISTICS SUPPORT INTERFACE OR SOFTWARE
Interface is the same as FOC. Special EVA awareness required, because it is different from the other instruments.

22. DESCRIPTION OF DEVIATION/WAIVER
See Sheet 2

23. NEED FOR DEVIATION/WAIVER
Matching the current FOC keyway alignment will reduce possible crew confusion during EVA. ACS will be the same as the FOC to be removed. Refer to FOC waiver 017 and CCBD AN2-01-1809.

24. CORRECTIVE ACTION TAKEN
None

25. SUBMITTING ACTIVITY
a. TYPED NAME (First, Middle Initial, Last) John F. Meadows
b. TITLE Project Engineer Quality Assurance
c. SIGNATURE John F. Meadows

26. APPROVAL/DISAPPROVAL
a. RECOMMEND ○ APPROVAL ○ DISAPPROVAL

b. APPROVAL
X APPROVED ○ DISAPPROVED

c. GOVERNMENT ACTIVITY
Associate Director of Flight Projects for HST

d. TYPE NAME (First, Middle Initial, Last) John H. Campbell
e. SIGNATURE John H. Campbell
f. DATE SIGNED (YYMMDD) 2/27/98

g. APPROVAL
○ APPROVED ○ DISAPPROVED

h. GOVERNMENT ACTIVITY
MICHAEL J. TALLEY
CONTRACTING OFFICER

i. TYPED NAME (First, Middle Initial, Last)
MICHAEL J. TALLEY
CONTRACTING OFFICER

j. SIGNATURE Michael J. Talley
k. DATE SIGNED (YYMMDD) 98/03/04

DD Form 1694, APR 92

(NEW PAGE CREATED BY IRN 116)

22. DESCRIPTION OF DEVIATION/WAIVER

ST-ICD-02E Paragraph 4.3.9. Keyway Location per Figure 4.3-17 partial View A-A and Figure 4.3-18. Keyway should be 90° +/- 45° to the P1 direction. ACS keyway Rotation will be +/- 45° to the P1 direction to match the FOC keyway position. Keyway Alignment will be consistent with keyway marking.

Access holes or openings in the dimensional range of 0.75 to 1.3 inches shall be guarded if exposed to the EV crewmember gloved hand. Small protrusions of less than 0.187 inches shall be rounded to a radius of 0.06 inches. Edges of exposed mismatched surfaces (of less than 0.187 inches) shall be either smoothed and rounded to 0.06 inch radius, chamfered to 0.06 inch by 45 degrees or covered by an appropriate material. IRN 100

When exterior MLI is used on the axial SI, the outer layer must be 0.002 inches minimum. Vent holes in the exposed surface of MLI shall be less than 0.4 inches in diameter to prevent snagging. SI changeout shall not require MLI removal or alteration. The total MLI blanket thickness shall be included in design solutions to meet the edge and corner requirements for crew safety.

4.3.9 Electrical Connector Locations. Electrical connectors shall be located on each SI as shown in Figures 4.3-17 and 4.3-18. A test connector cover is provided as GFE.

4.3.9.1 Ground Strap Location. The portion of the ground strap which mates with the SI is shown in Figure 4.3-17. The ground strap was supplied by the OTA contractor. A Crew Aid Ground Strap Attachment Fitting, which contains a captive bolt for securing the ground strap, is also shown in Figure 4.3-17. The Crew Aid Ground Strap Attachment Fitting is supplied as GFE and is installed by the SI contractor.

4.3.10 Paragraph Deleted.

4.3.11 Venting Pressurization and Purge. Vents for the Axial SIs shall be located in the zone of the -P1 face of the instrument as shown in Figure 4.3-19. The purge fitting may be located on each SI as shown in Figures 4.3.17 and 4.3-18. Other configurations for the purge fitting, such as on a removable contamination cover on the forward end of the SI, will be considered on a case by case basis. Specification of the purge gas is the responsibility of the SI contractor. Purge gas with a specification greater than Grade B shall be supplied by the SI contractor.

4.3.12 Cryogenic System. For any SI using cryogenic cooling the options for the location of the cryogenic exhaust vents, fill tubes and associated components are shown in Figure 4.3-19.

IRN 100

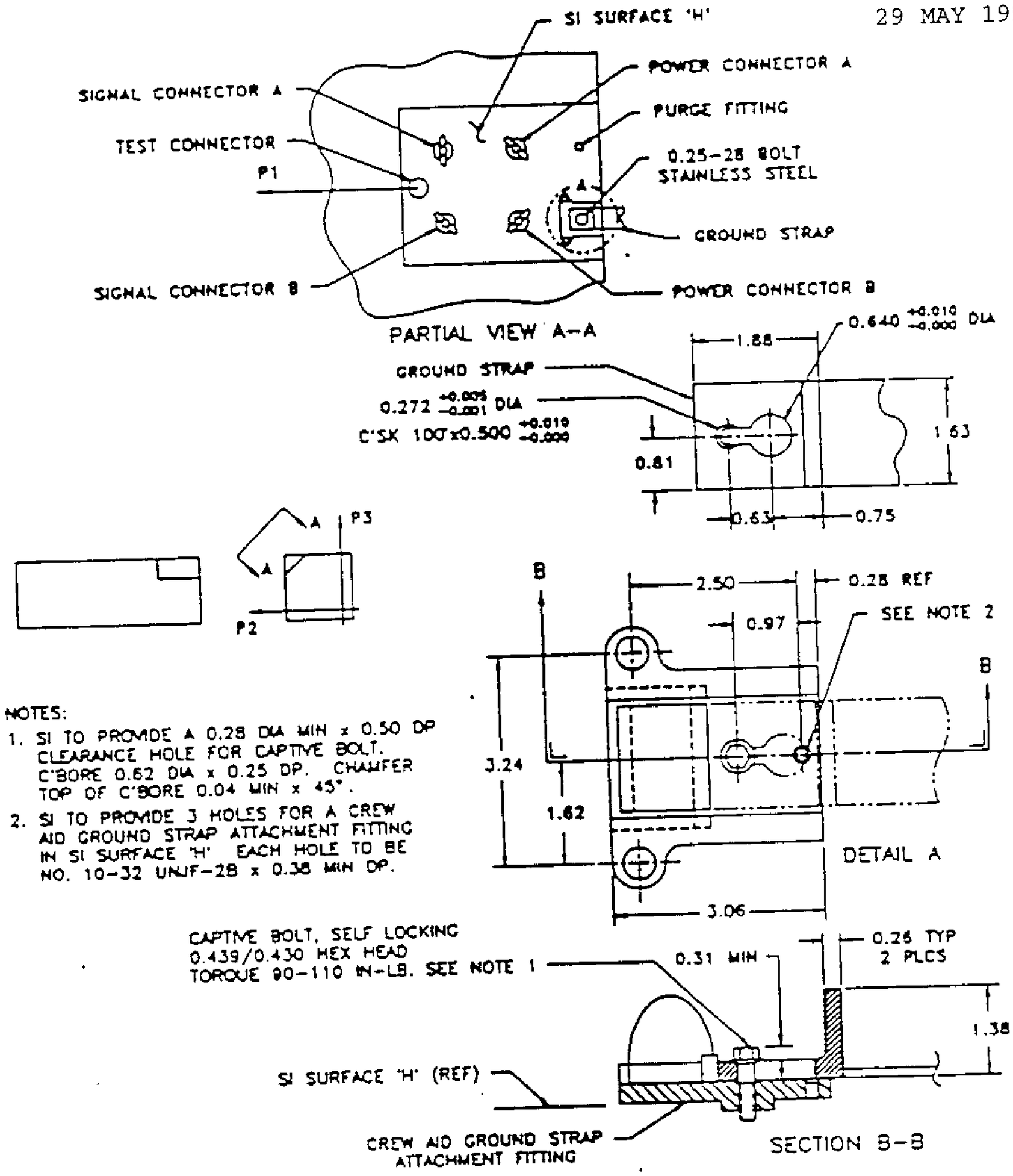

NOTES:

1. SI TO PROVIDE A 0.28 DIA MIN x 0.50 DP CLEARANCE HOLE FOR CAPTIVE BOLT. C'BORE 0.62 DIA x 0.25 DP. CHAMFER TOP OF C'BORE 0.04 MIN x 45°.
2. SI TO PROVIDE 3 HOLES FOR A CREW AID GROUND STRAP ATTACHMENT FITTING IN SI SURFACE 'H' EACH HOLE TO BE NO. 10-32 UNJF-2B x 0.38 MIN DP.

Figure 4.3-17 ORI Electrical Connector And Purge Fitting Arrangement

(NEW PAGE CREATED BY IRN 100)

(NEW PAGE CREATED BY IRN 116)

IRN 100

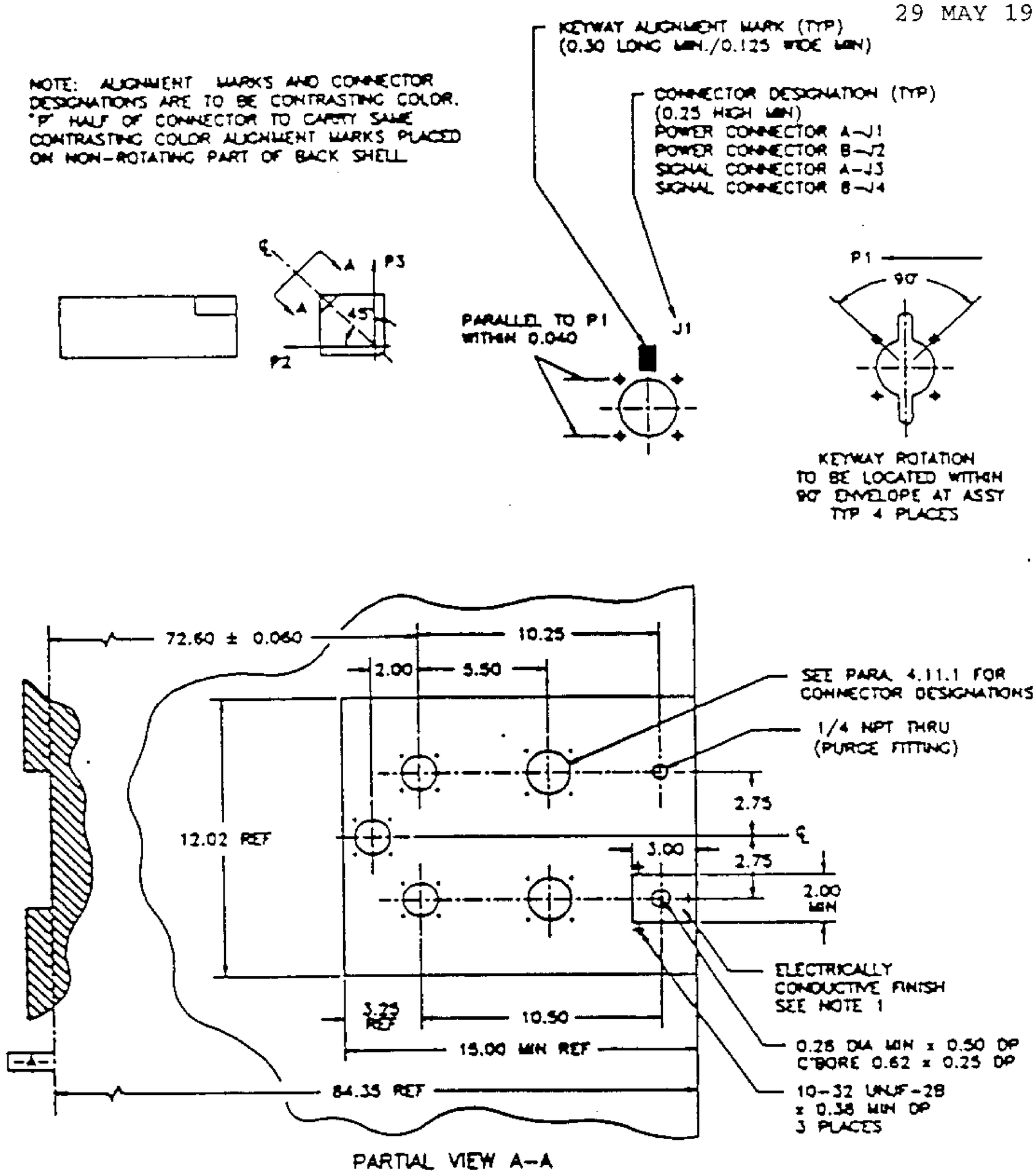

NOTES: 1. REFER TO SECTION 4.7.8 FOR GROUND STRAP CHARACTERISTICS

Figure 4.3-18 ORI Connector And Purge Fitting Details

(NEW PAGE CREATED BY IRN 100)

(NEW PAGE CREATED BY IRN 116)

ST-ICD-02E
29 June 1984
IRN 94
21 July 1988

DEVIATION APPROVAL REQUEST

FOR: [XX] ~~XXXXXX~~ Waiver AN3053 [ ] SUMMARY OF MINOR NONCONFORMANCES

2. FROM ~~XXXXXXXX~~	3. CONTRACT NUMBER:	4. REQUEST NUMBER:
European Space Agency	3457/78/82/sk	FOC- [redacted] 017

5. NOMENCLATURE:	6. NUMBER:	7. REVISION:	8. DATE:
Connector location	ST-ICD-02	E	29 June 1984

9. NONCONFORMANCE:	10. MRB ACTION NO.:	11. SERIAL NUMBER(S):	12. LOT NUMBER:	13. QUANTITY:
[XX] MINOR [ ] MAJOR				

14. SUPPLIER OR SUBCONTRACTOR (GIVE NAME AND ADDRESS):

ESA

15. SPECIFIED REQUIREMENTS:	16. DESCRIPTION OF DEPARTURE FROM REQUIREMENTS:
Fig. 3.3-16 requires the keyways to be located at 90° ± 45° to the P1 direction	Keyways are located within ± 45° of the P1 direction

17. REASON FOR REQUEST AND/OR CORRECTIVE ACTION TAKEN:

Build error

18. REMARKS:

Correction of the error would involve excessive rework and retest at this stage and it is proposed to "use as is". The only confusion would occur in orbit if the cables were disconnected and needed to be reconnected. Operations instructions could warn the astronauts in this case.

19. CONTRACTOR CERTIFICATION: THE CONTRACTOR HEREBY CERTIFIES THAT THE ABOVE DESCRIBED DEVIATION IS A DEPARTURE FROM THE CONTRACTUAL REQUIREMENTS IN THE QUANTITIES AND/OR CONDITIONS AS STATED ABOVE.

[ ] _____ COST ADJUSTMENT (EXPLAIN)
[X] NO COST ADJUSTMENT

R.J. Laurance 30 Nov 87

Project Manager — R.J. Laurance — _____
TITLE — SIGNATURE OF AUTHORIZED REPRESENTATIVE — DATE

20. GOVERNMENT QUALITY ASSURANCE REPRESENTATIVE COMMENTS:

_____ TITLE _____ SIGNATURE _____ DATE

21. MSFC REVIEW:

ORGANIZATION SYMBOL	REPRESENTATIVE	CONCURRENCE	NON-CONCURRENCE	DATE

22. CONTRACTING OFFICER'S REPRESENTATIVE OR OTHER DULY DELEGATED AUTHORITY:	23. CONTRACTING OFFICER:
[ ] DISAPPROVAL (RECOMMENDED) [ ] APPROVAL (RECOMMENDED) (WITH) (WITHOUT) PRICE ADJUSTMENT. $ _____	[ ] APPROVED [ ] DISAPPROVED [ ] SUBJECT TO CONDITIONS STATED ON MSFC FORM _____ 1.
TITLE — SIGNATURE — DATE	TITLE — SIGNATURE — DATE

MSFC-Form [illegible] (Rev. [illegible])

(NEW PAGE CREATED BY IRN 116)

NASA FLIGHT PROJECT 840, SPACE TELESCOPE	SPACE TELESCOPE LEVEL II CONFIGURATION CONTROL BOARD DIRECTIVE BOARD NO: AN2-01	DATE 7/21/88	PAGE 1 OF 2

PCN	CHANGE NO.	SPONSOR (ORG., NAME)	CCBD NO.
AN3053	GSFC CCR 1983	EL72/W. Karigan	AN2-01-1809

CHANGE TITLE

WAIVER FOC 017: CONNECTOR LOCATION

BASELINE DOCUMENTS AFFECTED (SPEC.ICDs,ETC)

ST-ICD-02: Axial SI-to-OTA/SSM

WEIGHT/POWER IMPACT

ITEM	IMPACT		
WEIGHT:	NO ☒	YES ☐	
POWER:	NO ☒	YES ☐	
MEMORY:	NO ☒	YES ☐	

COST/SCHEDULE IMPACT

TOTAL COST: $ NO COST

FY: ___ $ ___ FY: ___ $ ___

FY: ___ $ ___ FY: ___ $ ___

CHANGE DESCRIPTION

Waiver FOC 017 was transmitted to MSFC for HST Level II CCB action by GSFC CCR 1983. Per the FOC Waiver, ST-ICD-02 Fig. 3.3-16 requires the keyways to be located at 90° +/- 45° to the P1 direction. Keyways are located within +/- 45° of the P1 direction.

Correction of the error would involve excessive rework and retest at this stage and it is proposed to "use as is".

CHANGE DISPOSITIONS AND IMPLEMENTATION INSTRUCTIONS

1. GSFC CCR 1983 is **APPROVED AT HST LEVEL II**.

2. Waiver FOC 017 is **APPROVED WITH THE FOLLOWING CHANGES AT HST LEVEL II**:

   1) Block 15 of the Waiver should also include ST-ICD-02 Fig. 3.3-17 (Keyway Alignment Marks) as being affected. Block 16, therefore, should include that keyways and alignment marks are coincident and located with +/- 45° of the P1 direction. (Ref. AIR340).

3. IRN 94 (PIRN 2233) to ST-ICD-02 is **APPROVED TO INCORPORATE WAIVER FOC 017, AS MODIFIED**.

(Continued On Page 2)

CCB MEMBER	CONCUR YES	CONCUR NO	CCB MEMBER	CONCUR YES	CONCUR NO
Prog. Ctrl. C. Asbeer	✓		Maint & Refurb Max Roan	X	
S/C & Sys. Integ	✓		Chief Engineer ERB/STEPHENS: 4 APR 88	X	
Opt Telescope Assy Max Roan	X		Procurement		
St Sys Engr W. Taylor	✓		LMSC Sys. Engr. 7/15/88	✓	
Operations Mgr	✓				

HST CCB SECRETARY
7/25/88
W.T. ANGLIN

HST LEVEL II CHAIRMAN
FRED S. WOJTALIK

(NEW PAGE CREATED BY IRN 116)

MARSHALL SPACE FLIGHT CENTER
CCB DIRECTIVE - DATA AMPLIFICATION SHEET

CCBD NO.:	CCB:	PCN:	PAGE
AN2-01-1809	AN2-01	AN3053	2 of 2

CHANGE DISPOSITION - Continued (Refer to Item Number and Title Block on CCBD Form):

4. RECP 9770 has been received from P-E indicating concurrence to PIRN 2233 with no cost/schedule impacts.

5. Letter r228371 has been received from LMSC indicating concurrence to PIRN 2233 with no cost/schedule impacts.

6. AP54 shall notify LMSC and P-E of this HST Level II disposition. Further, LMSC shall be directed to prepare Replacement Pages incorporating IRN 94 (Waiver FOC 017, as modified) into ST-ICD-02 and distribute accordingly.

7. TA81, HST Change Control, shall notify GSFC STP-G Level III of this HST Level II CCB disposition (REF: CCR 1983)

8. TA51 shall investigate the need to include Waiver FOC 017 in the appropriate crew operating instructions and provide recommendation to TA81/HST Change Control.

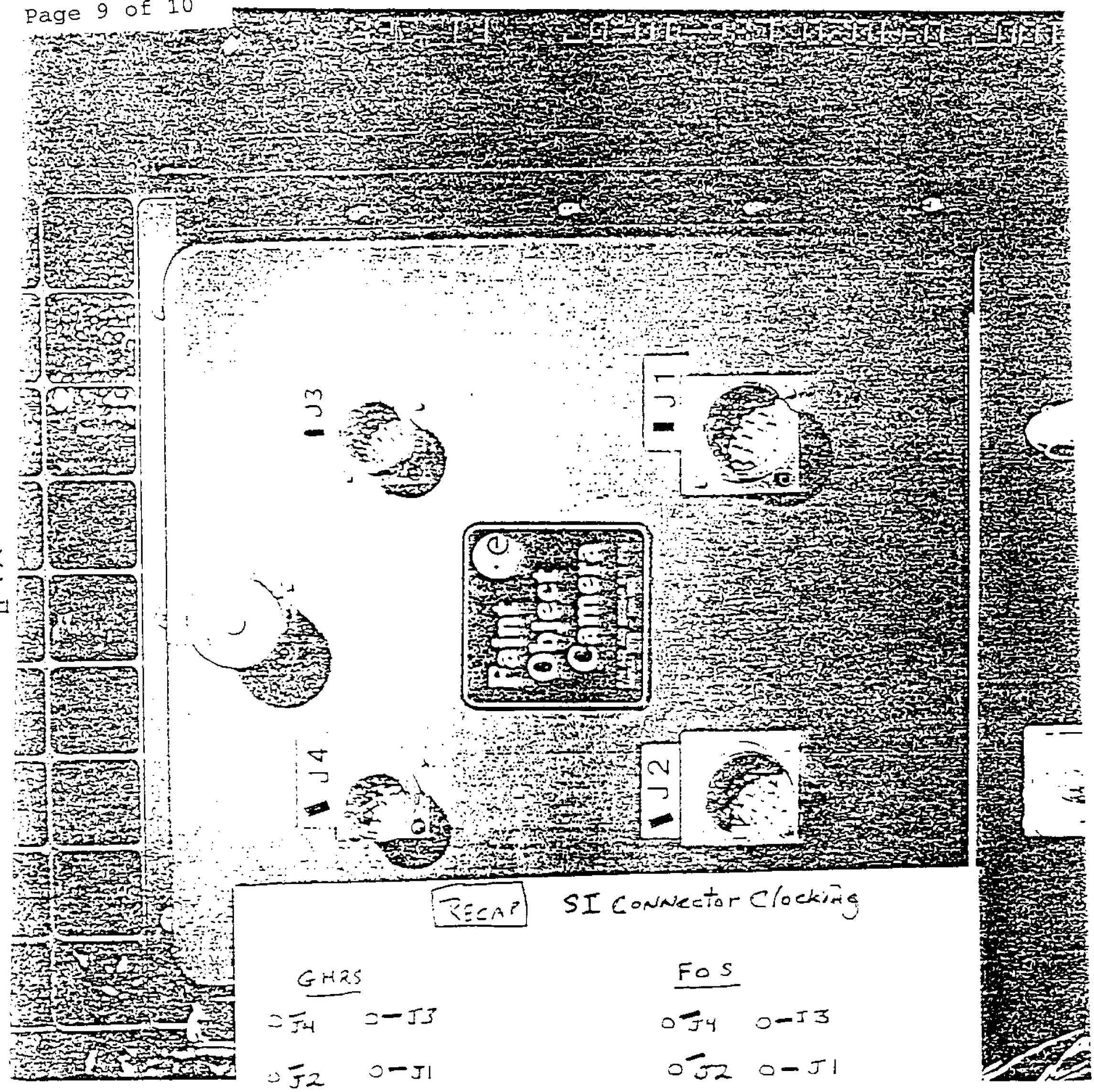

FOC Connector Clocking

(NEW PAGE CREATED BY IRN 116)

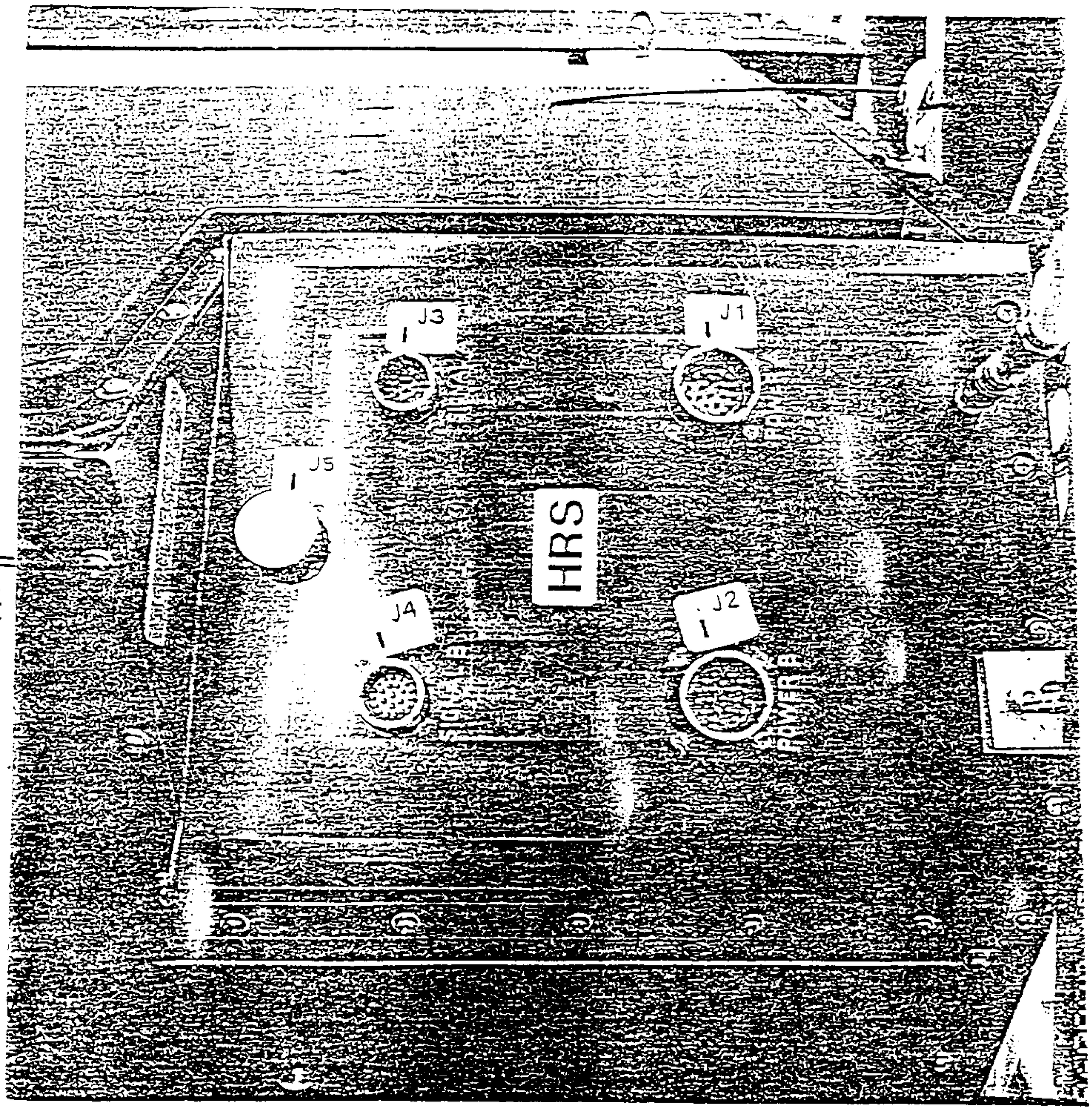

HRS Connector Clocking

(NEW PAGE CREATED BY IRN 116)

REQUEST FOR DEVIATION/WAIVER (RFD/RFW)

1. DATE (YYMMDD): 99/03/15

Form Approved OMB No 0704-0188

Public reporting burden for this collection of information is estimated to average 2 hours per response, including the time for reviewing instructions searching existing data sources, gathering and maintaining the data needed and completing and reviewing the collection of information. Send comments regarding this burden estimate or any other aspect of this collection of information, including suggestion for reducing the burden to Washington Headquarters Services, Directorate of Information Operations and Reports, 1215 Jefferson Davis, Highway, Suite 1204, Arlington, VA 22202-4302, and to the Office of Information and Regulatory Affairs, Office of Management and Budget, Washington, D.C. 20503

PLEASE DO NOT RETURN YOUR COMPLETED FORM TO EITHER OF THESE ADDRESSES. RETURN COMPLETED FORM TO THE GOVERNMENT ISSUING CONTRACTING OFFICER FOR THE CONTRACT/PROCURING ACTIVITY NUMBER LISTED IN ITEM 2 OF THIS FORM.

2. PROCURING ACTIVITY NUMBER:

3. DODAAC:

4. ORIGINATOR
a. Ball Aerospace Technologies Corp
John Meadows

b. ADDRESS (Street, City, State, Zip code)
P.O. Box 1062
Boulder, CO 80306-1062

5. (X one) ○ Deviation X Waiver

6. (X one) ○ Minor X Major ○ Critical

7. DESIGNATION FOR DEVIATION /WAIVER

a. MODEL/TYPE	b. CAGE CODE	c. SYS. DESIG.	d. DEV/WAIVER NO.
ACS	13993	IN0077A	IN0077-W-016

8. BASELINE AFFECTED: Functional Allocated X Product

9. OTHER SYSTEM CONFIGURATION ITEMS AFFECTED: ○ YES X NO

10. TITLE OF DEVIATION/WAIVER
SI Latch Magnetic Field Exceedance

11. CONTRACT NO. AND LINE ITEM
NAS5-32864

12. PROCURING CONTRACTING OFFICER
a. NAME (First, Middle Initial, Last): NEIL SQUARE
b. CODE: 442.0
c. TELEPHONE NO: (301) 286-9228

13. CONFIGURATION ITEM NOMENCLATURE
Advanced Camera for Surveys (ACS)

14. CLASSIFICATION OF DEFECT: N/A
a. CD NO: N/A
b. DEFECT NO.: N/A
c. DEFECT CLASSIFICATION: N/A ○ MINOR ○ MAJOR ○ CRITICAL

15. NAME OF LOWEST PART/ASSEMBLY AFFECTED: ACS

16. PART NO. OR TYPE DESIGNATION: 535000-500

17. EFFECTIVITY: ALL

18. RECURRING DEVIATION/WAIVER: YES NO

19. EFFECT ON COST/PRICE: NONE

20. EFFECT ON DELIVERY SCHEDULE: NONE

21. EFFECT ON INTEGRATED LOGISTICS, SUPPORT, INTERFACE OR SOFTWARE: NONE

22. DESCRIPTION OF DEVIATION/WAIVER ST-ICD-02E, para 3.6.2.2 ---field caused by the SI at the SI envelope does not exceed 0.8 gauss. Use as is because the GFE latches are installed on the ACS. The "A" latch ball is about 16 gauss. The "B" latch bolt is about 10 gauss. The "C" latch is about 8 gauss. See attached letter to P. Sullivan dated Feb. 26, 1999 from N. Piterski & W.Mitchell.

23. NEED FOR DEVIATION/WAIVER Cannot safely change the latches. Degaussing of simular latches outside the SI was ineffective. Latches from FOS &GHRS were also out of spec and functioned OK. Field strength falls to accepable levels at 3 inches. In-place degaussing may be a risk to the SI and its electronics.

24. CORRECTIVE ACTION TAKEN NOT APPLICABLE

25. SUBMITTING ACTIVITY
Ball Aerospace Technologies Corp.

a. TYPED NAME (First, Middle Initial, Last): John Meadows
b. TITLE: Project Engineer Quality Assurance
c. SIGNATURE: ORIGINAL SIGNED BY: JOHN MEADOWS

26. APPROVAL/DISAPPROVAL
a. RECOMMEND XX APPROVAL ○ DISAPPROVAL

b. APPROVAL ☑ APPROVED ○ DISAPPROVED
c. GOVERNMENT ACTIVITY: Deputy Associate Director of Flight Projects for HST
d. TYPE NAME (First, Middle Initial, Last): David M. Scheve
e. SIGNATURE: David M. Scheve
f. DATE SIGNED (YYMMDD): 99-06-25

g. APPROVAL ☑ APPROVED ○ DISAPPROVED
h. GOVERNMENT ACTIVITY: Michael E. McGrath Contracting Officer
i. TYPED NAME (First, Middle Initial, Last): Michael E. McGrath
j. SIGNATURE: Michael E. McGrath
k. DATE SIGNED (YYMMDD): 99/06/30

DD Form 1694, APR 92 — Previous editions are obsolete.

February 26, 1999

To: P. Sullivan

Cc: T. Griffin, C Coltharp

From: N. Piterski, W. Mitchell

Subject: Latch Magnetic Field Measurements

1. Background: ICD-02E, par. 3.6.2.2, SSM and SI Magnetic Field Intensity, states that "……field caused by the SI at the SI envelope does not exceed 0.8 gauss". In January 1999, magnetic field measurements were made about the exterior of the ACS Scientific Instrument using a hand held gauss meter. The measurements exceeded the ICD value in the vicinity of the latches, particularly the A and B latches. The A latch measured as high as 18 gauss at ¼ inch from the truncated spherical ball. These measurements resulted in an investigation of latch magnetic fields.

2. Measurement of other latches: Magnetic field measurements were made on latches from two other instruments returned from the HST; FOS and GHRS. The GHRS latches had been removed from the instrument and were measured "on the bench". The FOS latches were still in place. These latches had fields comparable to the ACS latches. Measurements were also made on latches mounted on the STAR, ASIS, and the Axial SI mass simulator. All these latches measured well over the ICD value and were comparable to the ACS.

3. Measurement of mating latches. Magnetic field measurements were made on the ORUC/ASIPE latches and on mating latches in bay 4 of the HFMS. These latches showed low fields of 1 gauss or less. It appears that these latches do not have the 400 series stainless steel parts that the axial SI latches have.

4. Measurement uncertainty: During the investigation it was found that measurements varied based on the instrument and type of probe used, the manner in which the probe was moved. (However, all readings were well over the ICD specified value when measured at 1/4 inch from the latch surface, the method initially employed on the ACS latches).

5. Field Variation with distance: With the most sensitive instrument and probe, the field decreased too less than the ICD value in three inches. For example, the field measured at an A latch ball surface at 16 gauss decreased to about 0.5 gauss background level at three inches from the surface.

6. Degauss Attempts. Three attempts were made at degaussing. Although some reduction in fields was achieved, particularly on the A latch, the values were still many times the ICD specified value.

a. 300 watt hand held degausser. This degausser was applied for four degauss cycles to the GHRS A and B latches. The A latch was reduced almost to one half and the B latch remained about the same.

b. GSFC Magnetics Lab 1.2 meter coil degausser. This degausser, supplying a 30 gauss field at 60 hz, was used on the GHRS latches. No further reduction was noted on the A latch and a slight reduction was made to the B latch.

c. ROSI Bench Degausser. F. Effrece of ROSI traveled to GSFC with their degausser, which was considerably larger than the 300 watt degausser (a. above). Further reduction in the A latch was noted but very little in the B latch readings. The degausser is too heavy to safely use on ACS latches in place.

7. Conclusions:

a. No reason for the 0.8 gauss requirement has been established.

b. ACS latch measurements are similar to measurements made on the latches of other flight scientific instrument (FOS, GHRS). They are the result of the 400 series stainless steel parts used in the latches.

c. After three attempts at degaussing the GHRS latches on the bench, the A latch remains an order of magnitude greater than the specification and the other latches are well above the limit. Further attempts to degauss sometimes resulted in a gain in field strength.

d. The field strength drops off to meet requirements within 3 inches of the latch surface. Initial measurements were made at 1/4 inch from the latch surface assuming that would approximate the scientific instrument envelope.

e. It is not recommended that ACS latches be degaussed in place on the instrument due to the risk of striking the latch with the degausser and the possible effect of the field on items within the instrument. If latches were removed, present degaussing methods would not result in reducing their field to spec level and exposure of the latches to fields in the future would probably bring them back to current levels.

8. Recommendation. Submit a waiver to the specification and use the latches "as is".

N. Piterski W. Mitchell

REQUEST FOR DEVIATION/WAIVER (RFD/RFW)

1. DATE (YYMMDD): 010713

Form Approved OMB No 0704-0188

Public reporting burden for this collection of information is estimated to average 2 hours per response, including the time for reviewing instructions, searching existing data sources, gathering and maintaining the data needed and completing and reviewing the collection of information. Send comments regarding this burden estimate or any other aspect of this collection of information, including suggestion for reducing the burden to Washington Headquarters Services, Directorate of Information Operations and Reports, 1215 Jefferson Davis Highway, Suite 1204, Arlington, VA 22202-4302, and to the Office of Information and Regulatory Affairs, Office of Management and Budget, Washington, D.C. 20503

PLEASE DO NOT RETURN YOUR COMPLETED FORM TO EITHER OF THESE ADDRESSES. RETURN COMPLETED FORM TO THE GOVERNMENT ISSUING CONTRACTING OFFICER FOR THE CONTRACT/PROCURING ACTIVITY NUMBER LISTED IN ITEM 2 OF THIS FORM.

2. PROCURING ACTIVITY NUMBER

3. DODAAC

4. ORIGINATOR
a. Ball Aerospace Technologies Corp
John Meadows

b. ADDRESS (Street, City, State, Zip code)
P.O. Box 1062
Boulder, CO 80306-1062

5. (X one) O Deviation X Waiver

6. (X one) O Minor X Major O Critical

7. DESIGNATION FOR DEVIATION/WAIVER

a. MODEL/TYPE	b. CAGE CODE	c. SYS. DESIG.	d. DEV/WAIVER NO.
ACS	13993	IN0077A	IN0077-W-021B

8. BASELINE AFFECTED: Functional O Allocated X Product

9. OTHER SYSTEM CONFIGURATION ITEMS AFFECTED: O YES X NO

10. TITLE OF DEVIATION/WAIVER "C"FITTING ORIENTATION

11. CONTRACT NO. AND LINE ITEM: NAS5-32864

12. PROCURING CONTRACTING OFFICER
a. NAME (First, Middle Initial, Last): NEIL SQUARE
b. CODE: 442.0
c. TELEPHONE NO: (301) 286-9228

13. CONFIGURATION ITEM NOMENCLATURE: Advanced Camera for Surveys (ACS)

14. CLASSIFICATION OF DEFECT: N/A
a. CD NO: N/A
b. DEFECT NO.: N/A
c. DEFECT CLASSIFICATION: N/A O MINOR X MAJOR O CRITICAL

15. NAME OF LOWEST PART/ASSEMBLY AFFECTED: ACS

16. PART NO. OR TYPE DESIGNATION: 535000-500

17. EFFECTIVITY: ALL

18. RECURRING DEVIATION/WAIVER: YES X NO

19. EFFECT ON COST/PRICE: NONE

20. EFFECT ON DELIVERY SCHEDULE: NONE

21. EFFECT ON INTEGRATED LOGISTICS, SUPPORT, INTERFACE OR SOFTWARE: NONE

22. DESCRIPTION OF DEVIATION/WAIVER: ST-ICD- 02E Paragraph 4.3.2.1 and Figure 4.3-8-The "C" Fitting is positioned rotated 180 degrees from the requirement. Recommended Disposition Approvel USE AS IS based on "SAI TM 1348,Flexure Blade Stresses on Axial SI C Latch ,dated 12/18/98,which provides analysis that show sufficient structural margins exist with the "C" Latch installed 180 degrees from ST-ICD-02 Figure 4.3-8; 2) MED 98-037, Advanced Camera for Surveys (ACS) Point C Latch Mounting Anomaly, dated 12/17/98, identifies metrology acceptability with the "C" Latch installed 180 degrees from that shown in Figure 4.3-8; 3) Fit check into the ASIPE and the HFMS is acceptable-Reference WOA #7616 ,ACS in HFMS,dated 8/00 and WOA #7728 ,ACS in ASIPE ,dated 9/00. SAI TM 1348 and MED 98-037 are attached

23. NEED FOR DEVIATION/WAIVER: This orientation is needed to assure repeatable precision optical alignment. This orientation allows alignment to be accomplished with the gravity force acting against the solid portion of the "C" latch instead of the spring.

24. CORRECTIVE ACTION TAKEN: NONE

25. SUBMITTING ACTIVITY: Ball Aerospace Technologies Corp.

a. TYPED NAME (First, Middle Initial, Last): John Meadows
b. TITLE: Project Engineer Quality Assurance
c. SIGNATURE: John Meadows

26. APPROVAL/DISAPPROVAL
a. RECOMMEND O APPROVAL O DISAPPROVAL
b. APPROVAL ● APPROVED O DISAPPROVED
c. GOVERNMENT ACTIVITY: Deputy Associate Director of Flight Projects for HST
d. TYPE NAME (First, Middle Initial, Last): David M. Scheve
e. SIGNATURE
f. DATE SIGNED (YYMMDD): 8/10/01 010810
g. APPROVAL ● APPROVED O DISAPPROVED
h. GOVERNMENT ACTIVITY: PROCUREMENT MANAGER, HST PROJECT
i. TYPED NAME (First, Middle Initial, Last): MICHAEL E. MCGRATH
j. SIGNATURE
k. DATE SIGNED (YYMMDD): 01/08/13

DD Form 1694, APR 92 — Previous editions are obsolete.

SWALES
AEROSPACE

Memo

SAI-TM-1348
12/18/98

To: M. Phan/GSFC

From: A. Lieberman/Swales Aerospace

Subject: Flexure Blade stresses on Axial SI C Latch

As per in the figure below, the SI Axial C Latch was rotated 180 degrees, prior to engagement, in order to mitigate the effect of gravity sag on the flexure blade in the fully engaged position. An evaluation of the SI C Latch was performed in order to determine max stresses on the blade during launch and subsequent to full engagement.

AXIAL PT C LATCHING CONCEPT

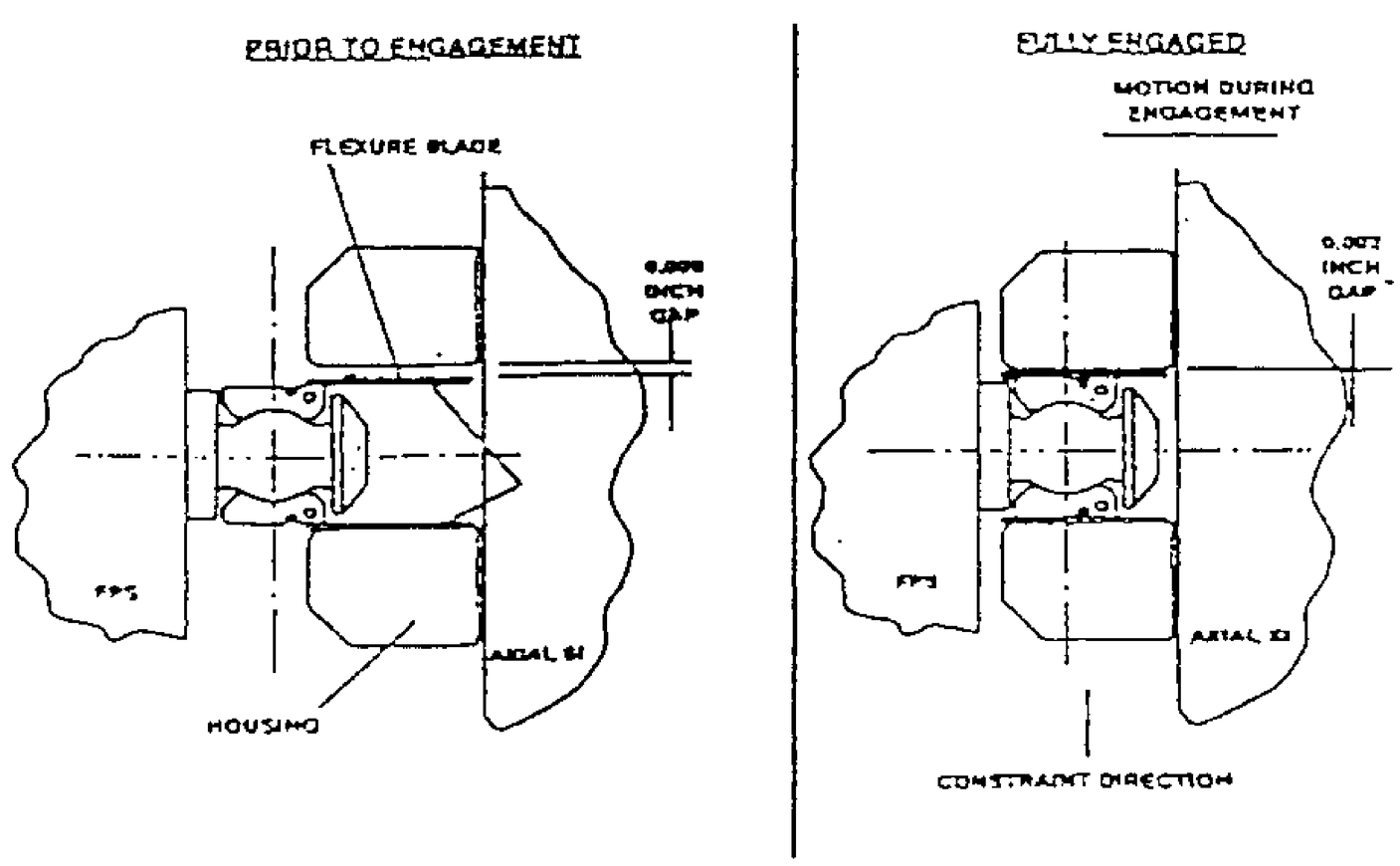

ASSUMPTIONS:

Material of blade =15-5 PH (H1025). Ftu = 155 ksi.
1" wide. 1.125 " cantilevered length
.10 inch thick blade
max deflection prior to engagement = .009 inch
max deflection subsequent to engagement = .002 inch
E =28.5 E03 psi
I = 8.3E-05 in^4

1.) To engage the latch fully, the blade deflects .009 inch. Thus, the "non-cycling" stress on the blade (i.e.sustained stress prior to launch) is derived below:

For a cantilevered blade : $P_{max} = \delta (3) (E) (I) / L^3$

And: $P_{max} = 45$ #

Now, max stress = : $P_{max} (L)(6)/(.1)^2 = 30.37$ ksi

2.) Subsequent to engagement, the blade can add "cyclic" stress consistent with deflections of +/- .002 Inch

Thus, max stress = (.002)/(.009)(30.37 ksi) = 6.74 ksi

Therefore the max. stress = + 37.11 ksi (at lower outer fiber)

And, M.S. = 155/37.11(1.4) −1 = <u>+ 1.98</u>

For low cycle fatigue, the max alternating stress = + 37.11 ksi / +24.63 ksi. This stress cyclic range is well within the endurance limit for 15-5 PH Steel. Therefore, no problem for fatigue.

<u>Conclusion:</u>

Regardless of the orientation of the flexure blade in the SI C Axial Latch (that is; +/- 180 degree orientation) Launch and on-orbit stresses on the flexure blade will not exceed 37.1 ksi and also do not represent a safety concern; for either strength or fatigue . Other functional considerations relating to this re-orientation can be addressed by test.

Raytheon

Raytheon Optical Systems, Inc.
100 Wooster Heights Road
Danbury, Connecticut
06810-7589
203.797.5000

Memorandum

Date	December 17, 1998	Memo number	MED-98-037
To	G. Hogan	From	E. Kaelber
Organization	ROSI	Organization	ROSI
Subject	Advanced Camera for Survey (ACS) Point C Latch Mounting Anomaly	Classification	
		Job number	
Distribution	A. Cassano/ F. Effrece	File number	A16-ST-1642

Background:

To facilitate the alignment process of the ACS instrument it was desirable to mount the Point C latch (679-0250) in a position that is rotated 180° from that shown on the installation drawing for Bay # 4. This new orientation of the latch located the hard registration surface of the latch against the stabilizer ball surface to improve the alignment accuracy in a 1 G vertical field.

Issues:
To use this new mounting configuration successfully in the next HST servicing mission, two key concerns had to be addressed. They are:

1. That there will be no mechanical interferences during the next EVA mission
2. Any initial instrument alignment changes due to an unsymmetrical latch design configuration be reviewed.

Approach and Conclusions:
Both the Axial C latch (679-5832) on the diagonal beam and the instrument latch (679-0250) were examined for possible interference points if the latches are rotated around the ball axis. Specific points of concern are:

1. Flexure (679-1979) and mounting hardware on latch 679-0250.
2. Internal mount hardware NAS1004-21A on latch 679-5832
3. Latch mounting on the FPS diagonal beam.

No mechanical interference points exist when the ACS Point C latch is installed in the 180° reversed position.

The design of the Point C latch (876-0250) was reviewed dimensionally for any unsymmetrical conditions that would cause an initial alignment change if the latch were rotated end for end. Latch base tolerances indicate that a rotation of approximate 14 sec around an axis through Points A and B would occur. This does not present an installation EVA problem but should be reviewed for any possible instrument alignment issues.

E. Kaelber

E. Kaelber

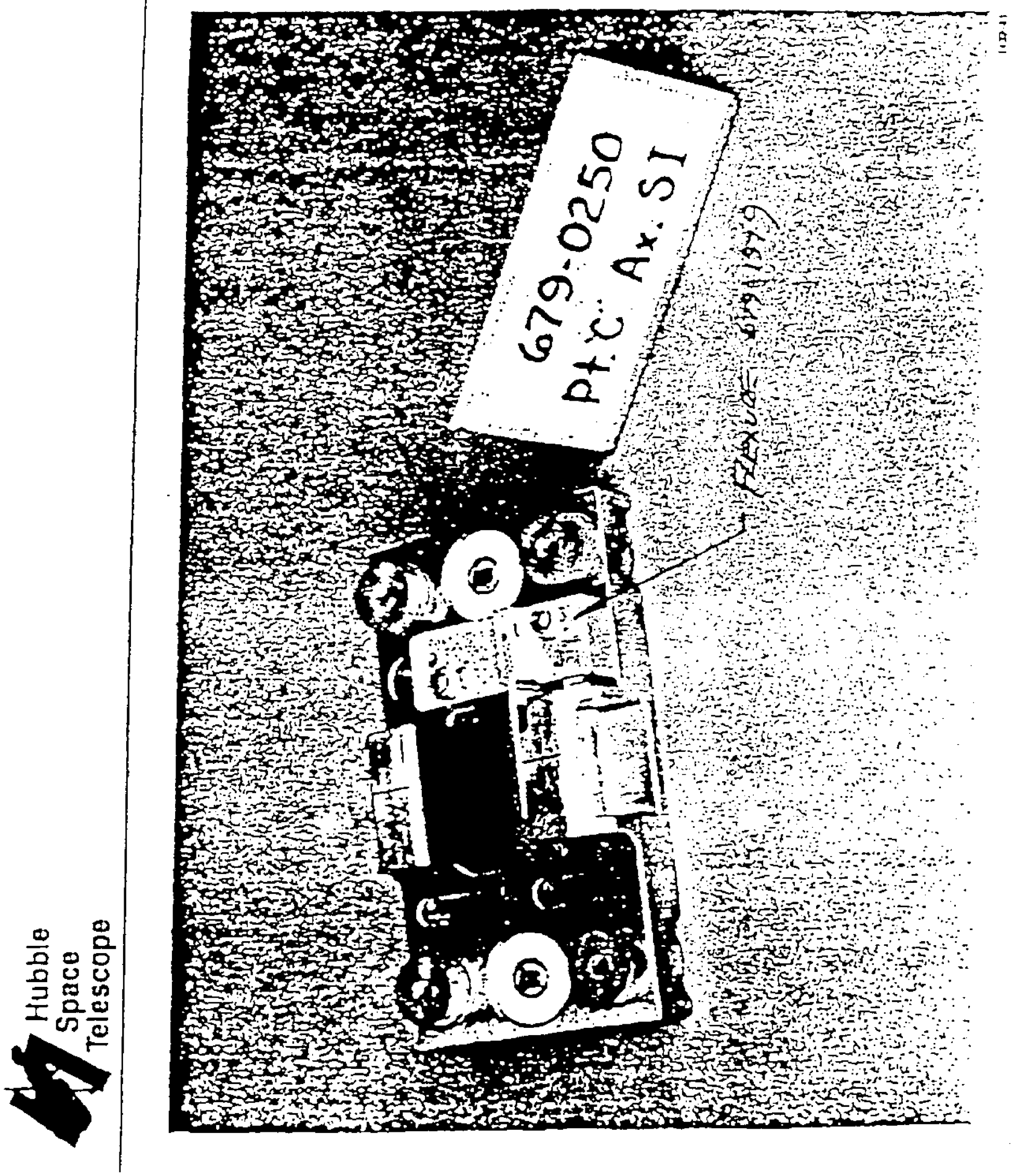
679-0250
Pt. C Ax. SI
Hubble
Space
Telescope

Hubble Space Telescope

FPS AXIAL PT C LATCH 679-5832

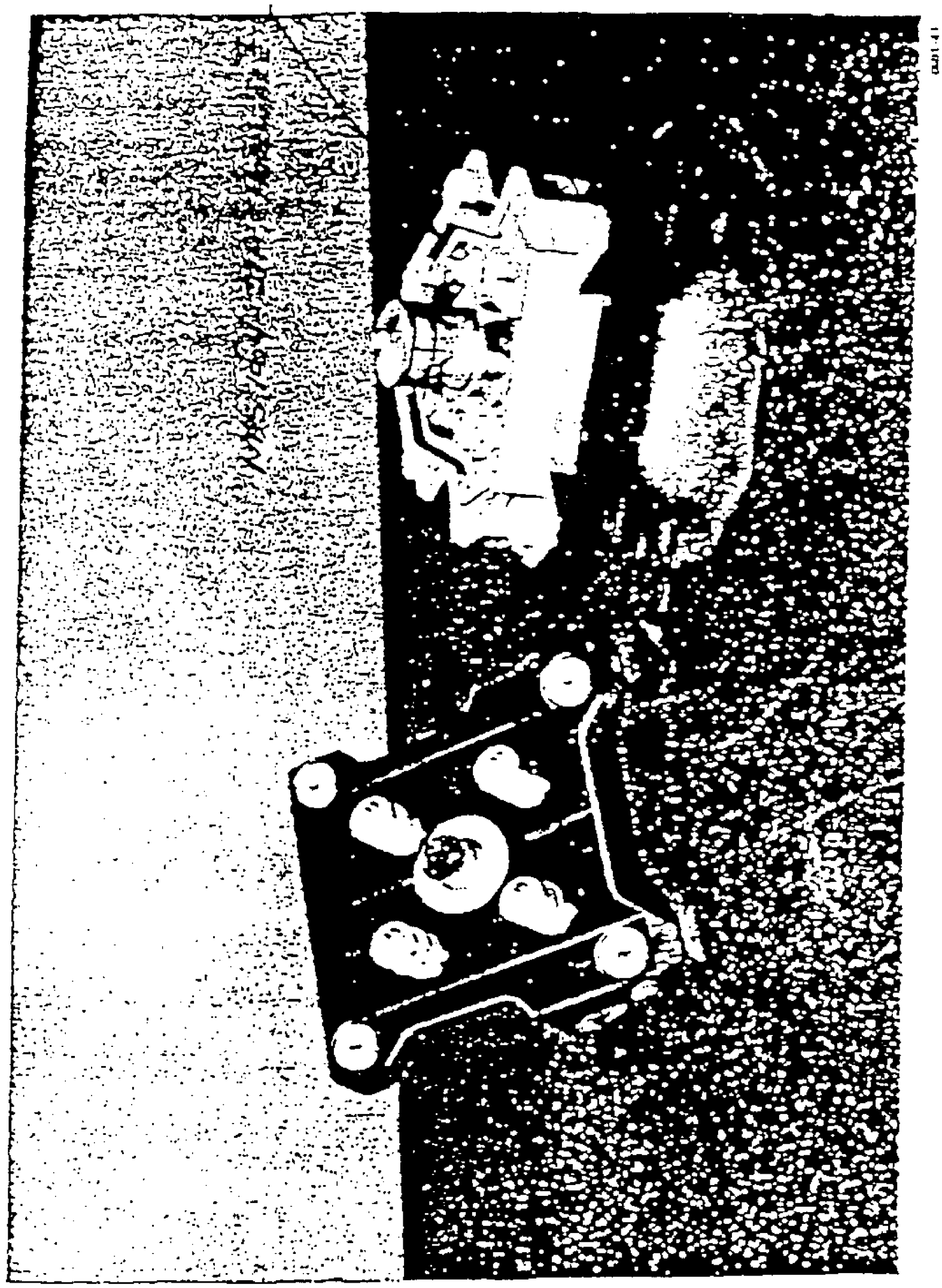

REQUEST FOR DEVIATION/WAIVER (RFD/RFW)

1. DATE (YYMMDD): 010803

Form Approved OMB No. 0704-0188

Public reporting burden for this collection of information is estimated to average 2 hours per response, including the time for reviewing instructions, searching existing data sources, gathering and maintaining the data needed, and completing and reviewing the collection of information. Send comments regarding this burden estimate or any other aspect of this collection of information, including suggestions for reducing this burden to Washington Headquarters Services, Directorate for Information Operations and Reports, 1215 Jefferson Davis Highway, Suite 1204, Arlington, VA 22202-4302, and to the Office of Management and Budget, Paperwork Reduction Project (0704-0188), Washington DC 20503.

PLEASE DO NOT RETURN YOUR COMPLETED FORM TO EITHER OF THESE ADDRESSES. RETURN COMPLETED FORM TO THE GOVERNMENT ISSUING CONTRACTING OFFICER FOR THE CONTRACT/PROCURING ACTIVITY NUMBER LISTED IN ITEM 2 OF THIS FORM

2. PROCURING ACTIVITY NUMBER: –

3. DODAAC:

4. ORIGINATOR
a. TYPED NAME (First, Middle Initial, Last): Ball Aerospace & Tech Corp
b. ADDRESS (Street no., City, State, Zip Code): P.O. Box 1062, Boulder, Colorado 80306-1062

5. (X one): [ ] DEVIATION [X] WAIVER

6. (X one): [X] MAJOR [ ] MINOR [ ] CRITICAL

7. DESIGNATION FOR DEVIATION/WAIVER

a. MODEL/TYPE	b. CAGE CODE	c. SYS DESIG	d. DEV/WAIVER NO
ACS	13993	IN0077 A	IN0077 -W- 022A

8. BASELINE AFFECTED: [ ] FUNCTIONAL [ ] ALLOCATED [X] PRODUCT

9. OTHER SYSTEM CONFIGURATION ITEMS AFFECTED: [ ] Yes [X] No

10. TITLE OF DEVIATION/WAIVER: GUIDE BLOCKS,FORWARD & AFT

11. CONTRACT NUMBER AND LINE ITEM: NAS5 - 32864

12. PROCURING CONTRACTING OFFICER
a. NAME (First, Middle Initial, Last): Neil Square
b. CODE: 442.0
c. TELEPHONE NO: (301) 286-9228

13. CONFIGURATION ITEM NOMENCLATURE: Advanced Camera for Surveys (ACS)

14. CLASSIFICATION OF DEFECT: N/A
a. CD NO.: N/A
b. DEFECT NO: N/A
c. DEFECT CLASSIFICATION: [ ] MINOR [X] MAJOR [ ] CRITICAL

15. NAME OF LOWEST PART/ASSEMBLY AFFECTED: ACS

16. PART NO. OR TYPE DESIGNATION: 535000-500

17. EFFECTIVITY: ALL

18. RECURRING DEVIATION/WAIVER: [ ] YES [X] NO

19. EFFECT ON COST/PRICE: NONE

20. EFFECT ON DELIVERY SCHEDULE: NONE

21. EFFECT ON INTEGRATED LOGISTICS SUPPORT, INTERFACE OR SOFTWARE: NONE

22. DESCRIPTION OF DEVIATION/WAIVER: ST-ICD-02E IRN 1?? See attached table 1 for exceedances. Swales memo "SAI-TM-1865" recommend USE AS IS.

23. NEED FOR DEVIATION/WAIVER
The guide blocks and rail are staked in place. The mounting surfaces cannot be re-machined without complete disassembly of the instrument ,which would have a major impact on cost and schedule. GFE guideblocks were provided in a warped condition that did not meet flatness requirements. Attached Goodrich A16-ST-2034 & Swales SAI-TM-1865 .

24. CORRECTIVE ACTION TAKEN
Future builds of Axial Science Instruments will machine the mounting surfaces during enclosure match machining operations.

25. SUBMITTING ACTIVITY: Ball Aerospace & Technologies Corporation
a. TYPED NAME (First, Middle Initial, Last): John Meadows
b. TITLE: Project Engineer Quality Assurance
c. SIGNATURE: John Meadows

26. APPROVAL/DISAPPROVAL
a. RECOMMEND [ ] APPROVAL [ ] DISAPPROVAL
b. APPROVAL [X] APPROVED [ ] DISAPPROVED
c. GOVERNMENT ACTIVITY: Deputy Associate Director of Flight Projects for HST
d. TYPED NAME (First, Middle Initial, Last): David M. Scheve
e. SIGNATURE:
f. DATE SIGNED (YYMMDD): 011019
g. APPROVAL [X] APPROVED [ ] DISAPPROVED
h. GOVERNMENT ACTIVITY: Contracting Officer
i. TYPED NAME (First, Middle Initial, Last): Michael E. McGrath
j. SIGNATURE:
k. DATE SIGNED (YYMMDD): 01/11/01

DD Form 1694, NOV 96 (Computer Generated)

IN0077-W-022A Table 1. ACS Guideblock & Guidestrip Waiver Summary

ST-ICD-02E IRN117 Section	Description	Require-ment	Actual Measurement(s)	Measurement Date/Method	Use-As-Is Rationale	References
Figures 4.3-1 and 4.3-4	Fwd guideblock exceeds +P1 dim	0.645 +/- .006	0.659-0.670	3/8/01 Laser Tracker	See Swales SAI-TM-1865 Successful installation in HFMS & ASIPE demonstrated 3X.	Goodrich A16-ST-2034, Figure 2, Table 1; SAI-TM-1865
Figure 4.3-1	Fwd guideblock +P3 edge low	29.812 +/- .01	29.801-29.812	3/8/01 Laser Tracker	See Swales SAI-TM-1865 Successful installation in HFMS & ASIPE demonstrated 3X.	Goodrich A16-ST-2034, Figure 2, Table 1; SAI-TM-1865
Figures 4.3-1 and 4.3-4	Rear guideblock exceeds +P1 dim	0.645 +/- .006	0.669-0.672	3/8/01 Laser Tracker	See Swales SAI-TM-1865 Successful installation in HFMS & ASIPE demonstrated 3X.	Goodrich A16-ST-2034, Figure 2, Table 1; SAI-TM-1865
Figure 4.3-12	Aft Guidestrip exceeds +P2 dim	0.55 +/- .010	0.528	3/8/01 Laser Tracker	See Swales SAI-TM-1865 Successful installation in HFMS & ASIPE demonstrated 3X.	Goodrich A16-ST-2034, Figure 4, Table 1

REQUEST FOR DEVIATION/WAIVER (RFD/RFW)	1. DATE (YYMMDD) 0100720	Form Approved OMB No. 0704-0188
Public reporting burden for this collection of information is estimated to average 2 hours per response, including the time for reviewing instructions, searching existing data sources, gathering and maintaining the data needed, and completing and reviewing the collection of information. Send comments regarding this burden estimate or any other aspect of this collection of information, including suggestions for reducing this burden to Washington Headquarters Services, Directorate for Information Operations and Reports, 1215 Jefferson Davis Highway, Suite 1204, Arlington, VA 22202-4302, and to the Office of Information and Regulatory Affairs, Office of Management and Budget, Washington, D.C. 20503. PLEASE DO NOT RETURN YOUR COMPLETED FORM TO EITHER OF THESE ADDRESSES. RETURN COMPLETED FORM TO THE GOVERNMENT ISSUING CONTRACTING OFFICER FOR THE CONTRACT/PROCURING ACTIVITY NUMBER LISTED IN ITEM 2 OF THIS FORM.	2. PROCURING ACTIVITY NUMBER 3. DODAAC	
4. ORIGINATOR a. Ball Aerospace & Technologies Corp John Meadows	b. ADDRESS (Street, City, State, Zip code) P.O. Box 1062 Boulder, CO 80306-1062	5. (X one) O Deviation X Waiver 6. (X one) O Minor X Major O Critical
7. DESIGNATION FOR DEVIATION/WAIVER a. MODEL/TYPE: ACS b. CAGE CODE: 13993 c. SYS. DESIG.: IN0077A d. DEV/WAIVER NO.: IN0077-W-15F	8. BASELINE AFFECTED Functional O Allocated X Product	9. OTHER SYSTEM CONFIGURATION ITEMS AFFECTED O YES X NO
10. TITLE OF DEVIATION/WAIVER AXIAL ORI STATIC ENVELOPE EXCEEDANCES		
11. CONTRACT NO. AND LINE ITEM NAS5-32864	12. PROCURING CONTRACTING OFFICER a. NAME (First, Middle Initial, Last): NEIL SQUARE b. CODE: 442.0 c. TELEPHONE NO: (301) 286-9228	
13. CONFIGURATION ITEM NOMENCLATURE Advanced Camera for Surveys (ACS)	14. CLASSIFICATION OF DEFECT: N/A a. CD NO: N/A b. DEFECT NO.: N/A c. DEFECT CLASSIFICATION: O MINOR X MAJOR O CRITICAL N/A	
15. NAME OF LOWEST PART/ASSEMBLY AFFECTED ACS	16. PART NO. OR TYPE DESIGNATION 535000-500	
17. EFFECTIVITY ALL	18. RECURRING DEVIATION/WAIVER YES X NO	
19. EFFECT ON COST/PRICE NONE	20. EFFECT ON DELIVERY SCHEDULE NONE	
21. EFFECT ON INTEGRATED LOGISTICS SUPPORT, INTERFACE OR SOFTWARE NONE		
22. DESCRIPTION OF DEVIATION/WAIVER. **Miscellaneous exceedances of ST-ICD-02E IRN 117 Figure4.3-1 AXIAL ORI STATIC ENVELOPE, See Table 1 for summary.** Figure 4.3-4 ORI Mount Point Fitting "A" SI Half, and Figure 4.3-14 ORI SI/GSE Interface.		
23. NEED FOR DEVIATION/WAIVER **Repair of these defects would be very costly**		
24. CORRECTIVE ACTION TAKEN **The " oil pan " anomalies have been corrected by using a new design .The next ASI design will take these defects into account.**		
25. SUBMITTING ACTIVITY **Ball Aerospace & Technologies Corp.**		
a. TYPED NAME (First, Middle Initial, Last): John Meadows	b. TITLE: Project Engineer Quality Assurance	c. SIGNATURE: John Meadows
26. APPROVAL/DISAPPROVAL	a. RECOMMEND O APPROVAL O DISAPPROVAL	
b. APPROVAL: X APPROVED O DISAPPROVED	c. GOVERNMENT ACTIVITY: Deputy Associate Director of Flight Projects for HST	
d. TYPE NAME (First, Middle Initial, Last): David M. Scheve	e. SIGNATURE	f. DATE SIGNED (YYMMDD): 011116
g. APPROVAL: X APPROVED O DISAPPROVED	h. GOVERNMENT ACTIVITY: HST Requirements Manager	
i. TYPED NAME (First, Middle Initial, Last): MICHAEL E. McGRATH	j. SIGNATURE	k. DATE SIGNED (YYMMDD): 01 12 07

IN0077-W-015F Table 1. ACS Static Envelope Waiver Summary

ST-ICD-02E Section	Description	Required	Actual Measurement	Measurement Date/Method	Use-As-Is Rationale	References
Figure 4.3-1	MEB Screws Protrude On -P2 & -P3 panels, towards aft end, 8 screws each side, 16 total	5.50 max	5.610 max (-P2) 5.574 max (-P3)	3/8/01 Laser Tracker	Axial bay simulator envelope is 5.90 in this region. No focal plane structure in this region to interfere. Successful install in HFMS demonstrated 3X. Lockheed recommends use-as-is and "smoothing" the protrusions.	Goodrich A16-ST2034, Figure 5, Table ; Lockheed FS&S 1458, Table 3.2-1.4-1/5-1; "Smoothing" – Ball Cert Log 535000-500; Sharp Edge Inspection – WOA 9393
Figure 4.3-14	GSE Pad Protrudes On +P3 Panel at +P1/+P2 corner	29.1 (+0, -.03)	29.117	3/8/01 Laser Tracker	Axial bay simulator envelope in this region is 29.75. Lockheed recommends use-as-is after successful installation in HFMS (completed 3X).	Goodrich A16-ST2034, Figure 3, Table 1. Lockheed FS&S 1458, Table 3.2-1.1
Figure 4.3-14	GSE Point Hole Locations on +P2 side	2.40 +/- .010	2.375 (hole at +P1/-P3 corner) 2.429 (hole at -P1/-P3 corner)	11/17/98 AIMS	Tolerances of mating GSE and crew aids accommodates slight misalignment. Successful fit checks with SIFIG and L-Handle complete.	Goodrich A16-ST1640, Figure 6-3 Lockheed FS&S 1458, Table 3.2-1.1
Figures 4.3-1 and 4.3-4	MAMA Heat Pipe Screws heads Protrude on –P1 surface (20 screws total)	86.1 (+0, –0.1)	85.759 to 86.167	3/8/01 Laser Tracker	The screw heads protrude .05 beyond the aft guide strip. Nearest structure is 0.7" away during insertion, even greater at latch-up. Successful install in HFMS demonstrated 3X. Lockheed recommends use-as-is and "smoothing" the protrusions.	Goodrich A16-ST2034, Figure 4, Table 1; Lockheed FS&S 1458, Table 3.2-1.6a; "Smoothing" – Ball Cert Log 535000-500; Sharp Edge Inspection – WOA 9393

REQUEST FOR DEVIATION/WAIVER (RFD/RFW)

1. DATE (YYMMDD): 010904

Form Approved OMB No. 0704-0188

Public reporting burden for this collection of information is estimated to average 2 hours per response, including the time for reviewing instructions, searching existing data sources, gathering and maintaining the data needed, and completing and reviewing the collection of information. Send comments regarding this burden estimate or any other aspect of this collection of information, including suggestions for reducing this burden to Washington Headquarters Services, Directorate for Information Operations and Reports, 1215 Jefferson Davis Highway, Suite 1204, Arlington, VA 22202-4302, and to the Office of Management and Budget, Paperwork Reduction Project (0704-0188), Washington DC 20503.

PLEASE DO NOT RETURN YOUR COMPLETED FORM TO EITHER OF THESE ADDRESSES. RETURN COMPLETED FORM TO THE GOVERNMENT ISSUING CONTRACTING OFFICER FOR THE CONTRACT/PROCURING ACTIVITY NUMBER LISTED IN ITEM 2 OF THIS FORM.

2. PROCURING ACTIVITY NUMBER:

3. DODAAC:

4. ORIGINATOR
a. TYPED NAME (First, Middle Initial, Last): Ball Aerospace & Tech Corp
b. ADDRESS (Street no., City, State, Zip Code): P.O. Box 1062, Boulder, Colorado 80306-1062

5. (X one): [ ] DEVIATION [X] WAIVER

6. (X one): [X] MAJOR [ ] MINOR [ ] CRITICAL

7. DESIGNATION FOR DEVIATION/WAIVER

a. MODEL/TYPE	b. CAGE CODE	c. SYS. DESIG.	d. DEV/WAIVER NO.
	13993	IN0077 A	IN0077 -W- 023

8. BASELINE AFFECTED: [X] FUNCTIONAL [ ] ALLOCATED [ ] PRODUCT

9. OTHER SYSTEM CONFIGURATION ITEMS AFFECTED: [ ] Yes [ ] No

10. TITLE OF DEVIATION/WAIVER: INRUSH CURRENT EXCEEDANCE

11. CONTRACT NUMBER AND LINE ITEM: NAS5 - 32864

12. PROCURING CONTRACTING OFFICER
a. NAME (First, Middle Initial, Last): Neil Square
b. CODE: 442.0
c. TELEPHONE NO: (301) 286-9228

13. CONFIGURATION ITEM NOMENCLATURE: ADVANCED CAMERA for SURVEYS (ACS)

14. CLASSIFICATION OF DEFECT: N/A
a. CD NO.: N/A
b. DEFECT NO.: N/A
c. DEFECT CLASSIFICATION: [ ] MINOR [X] MAJOR [ ] CRITICAL

15. NAME OF LOWEST PART/ASSEMBLY AFFECTED: ACS

16. PART NO. OR TYPE DESIGNATION:

17. EFFECTIVITY: SN 001

18. RECURRING DEVIATION/WAIVER: [ ] YES [X] NO

19. EFFECT ON COST/PRICE: NONE

20. EFFECT ON DELIVERY SCHEDULE: NONE

21. EFFECT ON INTEGRATED LOGISTICS SUPPORT, INTERFACE OR SOFTWARE: NONE

22. DESCRIPTION OF DEVIATION/WAIVER: ST-ICD – 02E Figure 4.7-4 In-rush Time Current Profile
See attached six (6) pages

23. NEED FOR DEVIATION/WAIVE
USE AS IS Defect is not a threat to fusing, cabling, or connectors. See supporting letter from H. Leidecker attached.

24. CORRECTIVE ACTION TAKEN: NONE

25. SUBMITTING ACTIVITY: Ball Aerospace & Technologies Corporation
a. TYPED NAME (First, Middle Initial, Last): John Meadows
b. TITLE: Project Engineer Quality Assurance
c. SIGNATURE: John Meadows

26. APPROVAL/DISAPPROVAL
a. RECOMMEND [ ] APPROVAL [ ] DISAPPROVAL

b. APPROVAL [✓] APPROVED [ ] DISAPPROVED
c. GOVERNMENT ACTIVITY: Program Manager, HST
d. TYPED NAME (First, Middle Initial, Last): Michael E. McCann
e. SIGNATURE: [signature]
f. DATE SIGNED (YYMMDD): 01-11-27

g. APPROVAL [✓] APPROVED [ ] DISAPPROVED
h. GOVERNMENT ACTIVITY: Deputy Associate Director of Flight Projects for HST
i. TYPED NAME (First, Middle Initial, Last): David M. Scheve
j. SIGNATURE: [signature]
k. DATE SIGNED (YYMMDD): 011116

DD Form 1694, NOV 96 *(Computer Generated)*

22. DESCRIPTION OF WAIVER Attachment cont'd

Values apply at 30 +/- 0.5 VDC

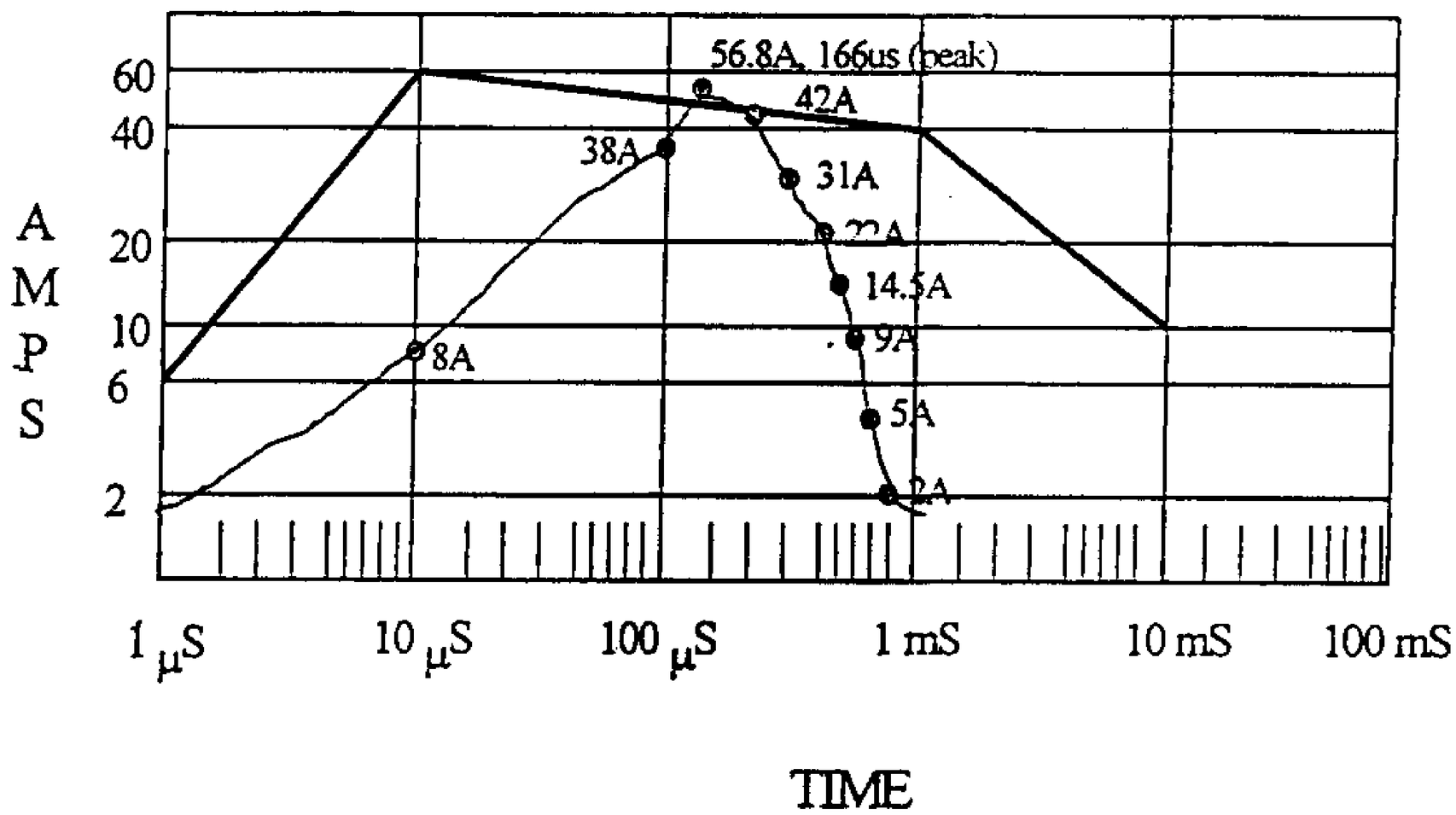

Figure 1

22. DESCRIPTION OF WAIVER Attachment cont'd

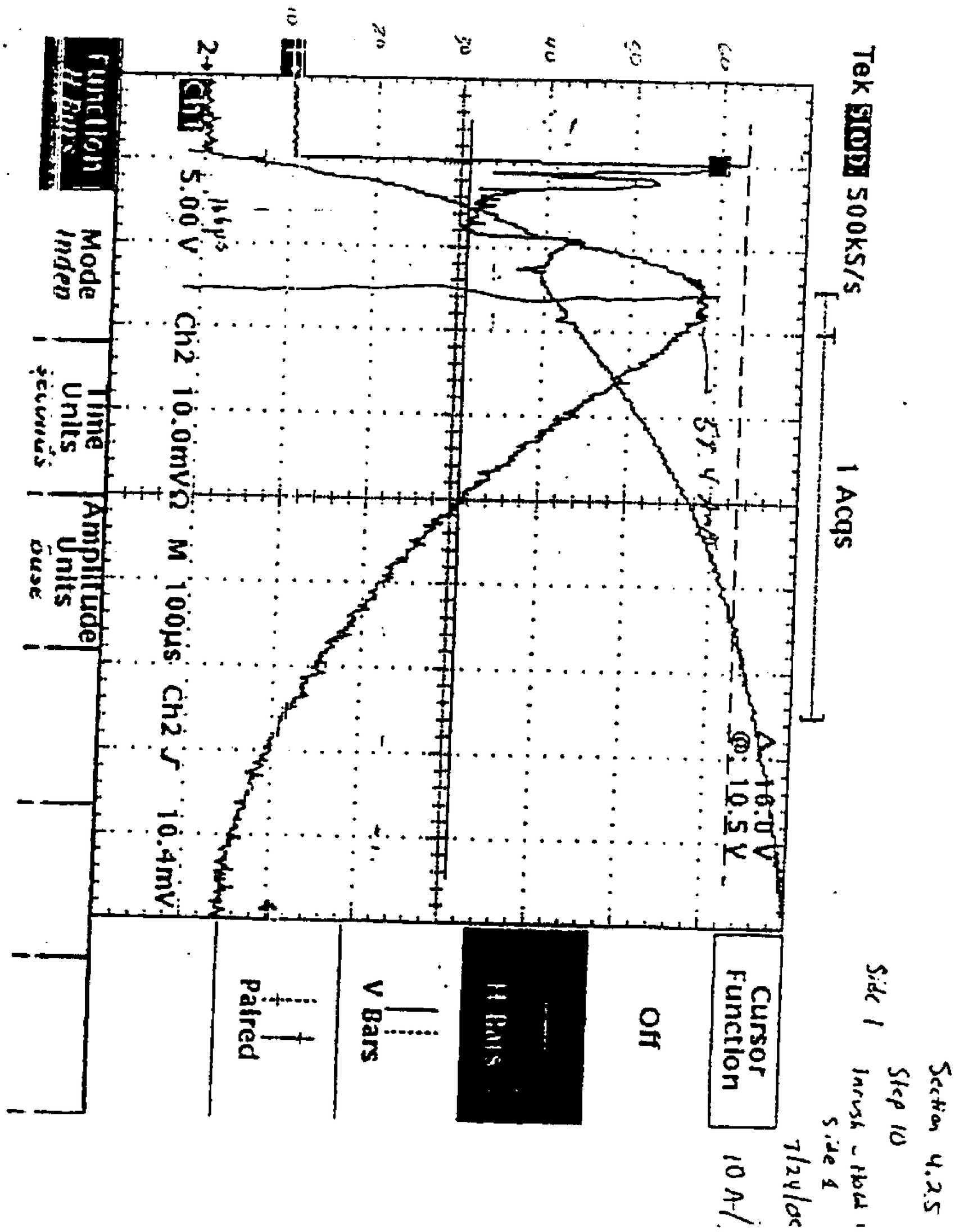

22. DESCRIPTION OF WAIVER Attachment cont'd

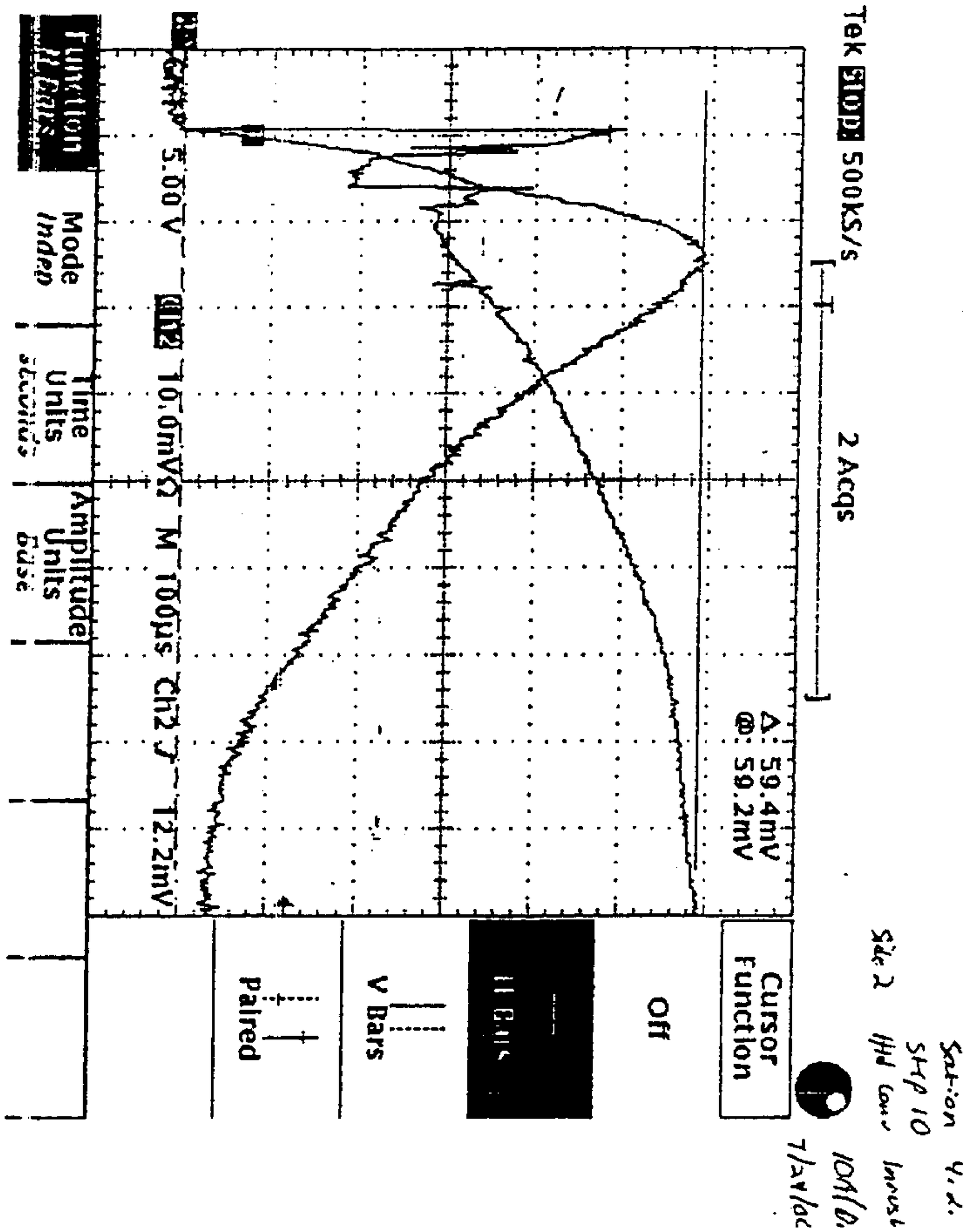

22. DESCRIPTION OF WAIVER Attachment cont'd

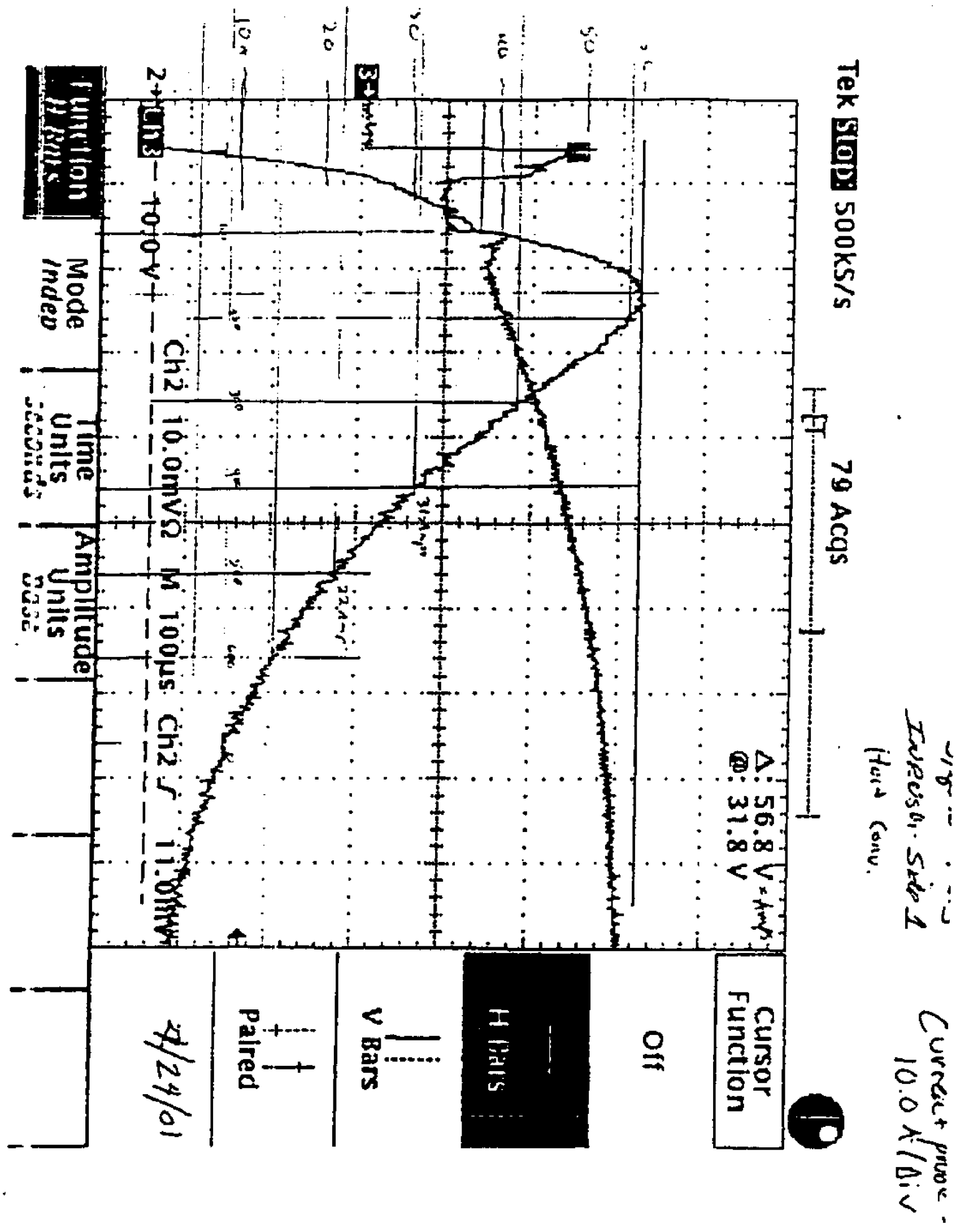

(NEW PAGE CREATED BY IRN 123)

22. DESCRIPTION OF WAIVER Attachment cont'd

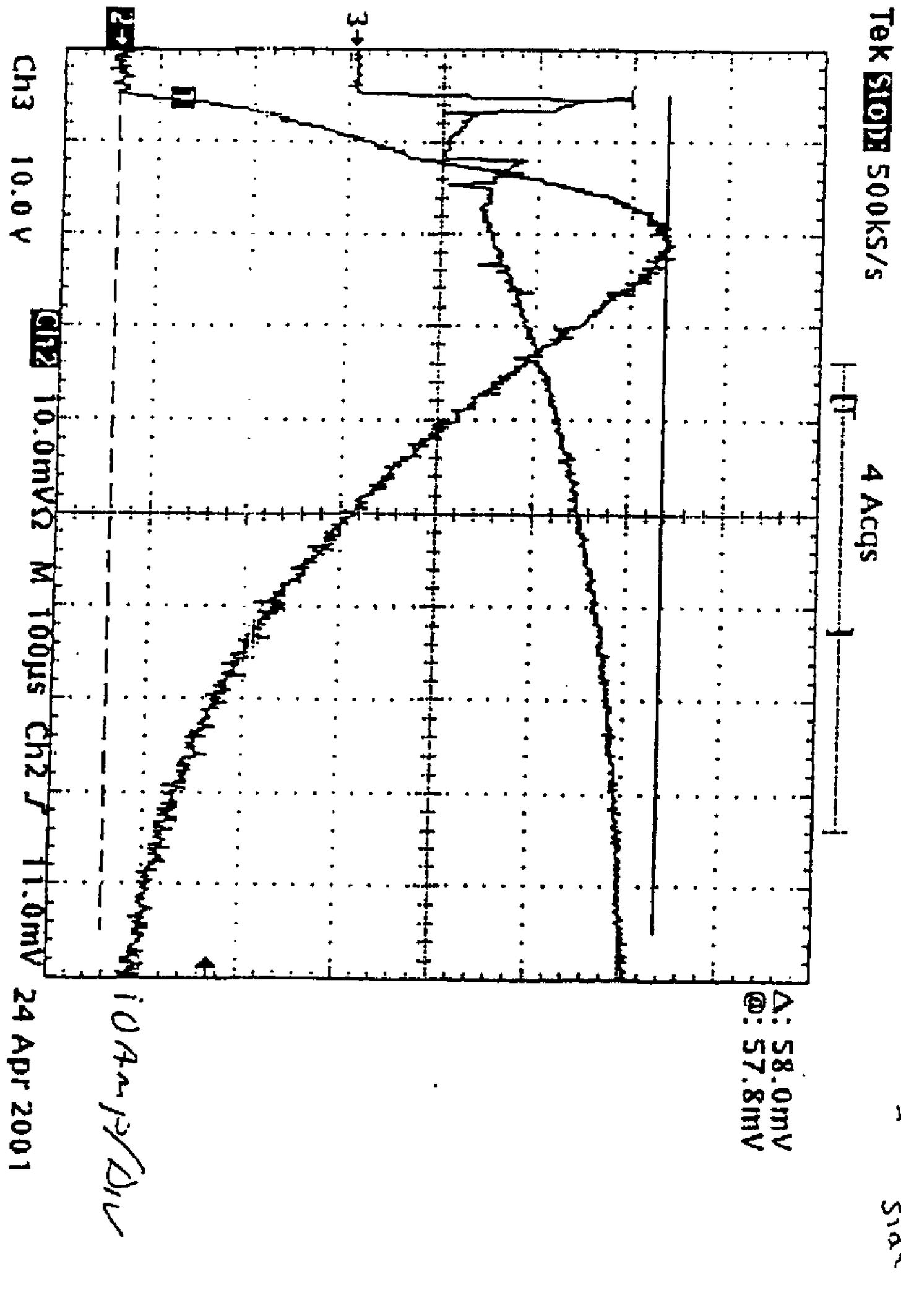

22. DESCRIPTION OF WAIVER Attachment 22 (Continued)

HAR 1515 - ACS Inrush Current Out of Spec - Supporting Data for Waiver

On 7/24/00 ACS went through the initial Interface Verification Test (IVT) with VEST. This test verifies all of the electrical interface signals between the ACS, the Power Distribution Units (PDUs), and the Science Instrument Control and Data Handling (SIC&DH). As part of this test the inrush current is measured on both side 1 and side 2 of the ACS to verify the ICD-02 (Axial SI ICD) requirement 4.7.9.2. The inrush current pictures taken on the oscilloscope are included as part of this document. The pictures show that the ACS inrush is slightly out of specification. ACS was also retested on 4/24/01 to re-verify the inrush and make sure the out of spec wasn't a test measurement issue. The results were the same as the 7/24/00. A formal waiver needs to be written by and approved by HST systems. HST systems needs to provide the analysis to show that the ACS inrush isn't going to overstress the PDU fuses. This document includes the supporting data for that waiver. I have also included a diagram of the inrush specification. I used the side 1 data from 4/24/01 and overlaid that data against the specification see the out of tolerance (Figure 1).

23. NEED FOR WAIVER Attachment

National Aeronautics and
Space Administration
Goddard Space Flight Center
Greenbelt, MD 20771

29 Aug 01

I have reviewed the ACS pulse trace and current-time contour (attached) in conjunction with the request for a waiver against the ICD-02E inrush current requirement. While the pulses exceed the limiting current-time contour, they do so for too brief a time to be a threat to fusing, cabling, or connectors, even if repeated many times. I computed the I^2t value for the pulses captured in the oscilloscope traces. The value is within 20% of $1.0A^2s$. The fuse is "safe" against current interruption up to $\sim 300A^2s$, giving a safety factor of 300 times. Repeated pulses will also not be a problem: for 100,000 power on/off cycles, the safety factor drops to (a still sufficient) ~80 times.

Henning Leidecker

Henning Leidecker
GSFC/Code 562

REQUEST FOR DEVIATION/WAIVER (RFD/RFW)

1. DATE (YYMMDD): 010904

Form Approved OMB No 0704-0188

Public reporting burden for this collection of information is estimated to average 2 hours per response, including the time for reviewing instructions, searching existing data sources, gathering and maintaining the data needed, and completing and reviewing the collection of information. Send comments regarding this burden estimate or any other aspect of this collection of information, including suggestions for reducing this burden to Washington Headquarters Services, Directorate for Information Operations and Reports, 1215 Jefferson Davis Highway, Suite 1204, Arlington, VA 22202-4302, and to the Office of Management and Budget, Paperwork Reduction Project (0704-0188), Washington DC 20503.

PLEASE DO NOT RETURN YOUR COMPLETED FORM TO EITHER OF THESE ADDRESSES. RETURN COMPLETED FORM TO THE GOVERNMENT ISSUING CONTRACTING OFFICER FOR THE CONTRACT/PROCURING ACTIVITY NUMBER LISTED IN ITEM 2 OF THIS FORM.

2. PROCURING ACTIVITY NUMBER

3. DODAAC

4. ORIGINATOR
a. TYPED NAME (First, Middle Initial, Last): Ball Aerospace & Tech Corp
b. ADDRESS (Street no., City, State, Zip Code): P.O. Box 1062, Boulder, Colorado 80306-1062

5. (X one): [ ] DEVIATION [X] WAIVER

6. (X one): [X] MAJOR [ ] MINOR [ ] CRITICAL

7. DESIGNATION FOR DEVIATION/WAIVER

a. MODEL/TYPE	b. CAGE CODE	c. SYS. DESIG.	d. DEV/WAIVER NO.
ACS	13993	IN0077A	IN0077-W- 020 A

8. BASELINE AFFECTED: [ ] FUNCTIONAL [ ] ALLOCATED [X] PRODUCT

9. OTHER SYSTEM CONFIGURATION ITEMS AFFECTED: [ ] Yes [X] No

10. TITLE OF DEVIATION/WAIVER: ACS EMI/EMC

11. CONTRACT NUMBER AND LINE ITEM: NAS5-32864

12. PROCURING CONTRACTING OFFICER
a. NAME (First, Middle Initial, Last): Neil Square
b. CODE: 442.0
c. TELEPHONE NO: (301) 286-9228

13. CONFIGURATION ITEM NOMENCLATURE: Advanced Camera for Surveys (ACS)

14. CLASSIFICATION OF DEFECT: N/A
a. CD NO.: N/A
b. DEFECT NO.: N/A
c. DEFECT CLASSIFICATION: [ ] MINOR [X] MAJOR [ ] CRITICAL

15. NAME OF LOWEST PART/ASSEMBLY AFFECTED: ACS

16. PART NO. OR TYPE DESIGNATION: 535000-500

17. EFFECTIVITY: All

18. RECURRING DEVIATION/WAIVER: [ ] YES [X] NO

19. EFFECT ON COST/PRICE: None

20. EFFECT ON DELIVERY SCHEDULE: None

21. EFFECT ON INTEGRATED LOGISTICS SUPPORT, INTERFACE OR SOFTWARE: None

22. DESCRIPTION OF DEVIATION/WAIVER: The ACS requires a waiver for ST-ICD-02 Axial SI to OTA and SSM ICD, Paragraph 4.7.9.3 SI Generated Ripple and Noise and Paragraph 4.7.9.8 Radiated Electric Field Emissions to USE AS IS. The out of limits test results are listed in the attached Table 11-1 titled "CE03 Test Result Summary" from "HST ACS Retest Electromagnetic Compatibility Test Report", NSI 24-07-1197 dated June 2001 and Table 4 titled "July 2000 ACS RE02 Emissions Test Results (ICD-02 limits) in ACS EMC Retest" EM: FS&S 1522 Test Report Summary, dated October 30, 2001.

23. NEED FOR DEVIATION/WAIVE: See attached

24. CORRECTIVE ACTION TAKEN: No Further Effective Corrective Action can be made.

25. SUBMITTING ACTIVITY: Ball Aerospace & Technologies Corporation
a. TYPED NAME (First, Middle Initial, Last): John Meadows
b. TITLE: Project Engineer Quality Assurance
c. SIGNATURE: John Meadows

26. APPROVAL/DISAPPROVAL
a. RECOMMEND [ ] APPROVAL [ ] DISAPPROVAL
b. APPROVAL [X] APPROVED [ ] DISAPPROVED
c. GOVERNMENT ACTIVITY: Deputy Associate Director of Flight Projects for HST
d. TYPED NAME (First, Middle Initial, Last): David M. Scheve
e. SIGNATURE: David M. Scheve
f. DATE SIGNED (YYMMDD): 011203
g. APPROVAL [X] APPROVED [ ] DISAPPROVED
h. GOVERNMENT ACTIVITY: HST PROCUREMENT MANAGER
i. TYPED NAME (First, Middle Initial, Last): MICHAEL E. McGRATH
j. SIGNATURE: Michael E. McGrath
k. DATE SIGNED (YYMMDD): 020325

DD Form 1694, NOV 96 (Computer Generated)

Block 22 Description of Deviation/Waiver (Continued)

Table 11-1. CE03 Test Result Summary

Test Number	Test Type	Sensor Location	Test Mode	Test Results
20	Narrowband & Broadband 20 kHz - 50 MHz	28 VDC Return	GSE ON DUT ON	1 NB emission above the limits: 2.2 dB @ 549.9 kHz.
21	Narrowband 20 kHz - 50 MHz	+28 VDC	GSE ON DUT ON	1 emission above the limits: 2.8 dB @ 549.9 kHz.
	Broadband 20 kHz - 50 MHz			1 emission above the limits: 0.2 dB @ 549.9 kHz.

Table 4 (EM: FS&S 1522, dated October 30, 2001). July 2000 ACS RE02 Emissions Test Results (ICD-02 limits)

RE02 Test Type	**Test Number**	**Antenna Position**	**Test Mode**	**ICD-02 Pass/Fail**
Narrowband 14 kHz - 1 GHz	120	1 m, 45°, Position 3	WFC/HRC Operate	Fail - 37 emissions above the limits from 551.4 kHz - 74.16 MHz. The three highest are 19.0 dB @ 21.96 MHz, 17.6 dB @ 21.48 MHz & 16.5 dB @ 20.77 MHz.
Broadband 14 kHz - 1 GHz				Fail - 5 emissions above the limits from 10.28 - 24.55

				MHz. The three highest are 11.8 dB @ 14.37 MHz, 6.6 dB @ 10.28 MHz & 4.6 dB @ 24.55 MHz.
Narrowband 14 kHz - 1 GHz	121	1 m, 45°, Position 2	WFC/HRC Operate	Fail - 35 emissions above the limits from 1.647 - 40.13 MHz. The three highest are 14.4 dB @ 32.1 MHz, 13.1 dB @ 3.328 MHz & 12.4 dB @ 24.01 MHz.
Broadband 14 kHz - 1 GHz				Fail - 1 emission above the limits: 7.2 dB @ 23.48 MHz.
Narrowband 14 kHz - 1 GHz	122	1 m, 45°, Position 1	WFC/HRC Operate	Fail - 40 emissions above the limits from 2.752 - 191.58 MHz. The three highest are 24.8 dB @ 14.37 MHz, 24.0 dB @ 21.72 MHz & 23.6 dB @ 22.96 MHz.
Broadband 14 kHz - 1 GHz				Fail - 11 emissions above the limits from 10.28 - 24.01 MHz. The three highest are 19.0 dB @ 23.48 MHz, 6.9 dB @ 14.37 MHz & 6.1 dB @ 22.71 MHz.
Narrowband 14 kHz - 1 GHz	123	1 m, 45°, Position 1	WFC/SBC Operate	Fail - 40 emissions above the limits from 2.752 - 191.58

				MHz. The three highest are 26.3 dB @ 22.71 MHz, 24.7 dB @ 14.21 MHz & 22.9 dB @ 21.72 MHz.
Broadband 14 kHz - 1 GHz				Fail - 10 emissions above the limits from 12.29 - 24.01 MHz.. The three highest are 12.7 dB @ 14.37 MHz & 8.3 dB @ 21.72 & 22.71 MHz.
Narrowband 14 kHz - 1 GHz	124	1 m, 45°, Position 2	WFC/SBC Operate	Fail - 34 emissions above the limits from 1.647 - 162.04 MHz. The three highest are 19.6 dB @ 32.1 MHz, 14.1 dB @ 22.96 MHz & 13.3 dB @ 3.328 MHz.
Broadband 14 kHz - 1 GHz				Fail - 2 emissions above the limits; 1.4 dB @ 10.28 MHz & 1.1 dB @ 20.31 MHz.
Narrowband 14 kHz - 1 GHz	125	1 m, 45°, Position 3	WFC/SBC Operate	Fail - 40 emissions above the limits from 551.4 kHz - 395.85 MHz. The three highest are 18.0 dB @ 22.96 MHz, 16.1 dB @ 32.1 MHz & 16.0 dB @ 21.96 MHz.

Broadband 14 kHz - 1 GHz				Fail - 2 emissions above the limits: 20.6 dB @ 22.71 MHz & 9.8 dB @ 14.37 MHz.
Narrowband 14 kHz - 1 GHz	126	1 m, 45°, Position 1	GSE ON DUT OFF (SITS, chillers & RIUs on)	Fail - 17 emissions above the limits from 4.919 - 191.58 MHz. The three highest are 23.4 dB @ 14.37 MHz, 18.3 dB @ 22.46 MHz & 13.8 dB @ 32.1 MHz.
Broadband 14 kHz - 1 GHz				Fail - 3 emissions above the limits: 6.1 dB @ 14.37 MHz, 1.0 dB @ 18.37 MHz & 0.7 dB @ 19.42 MHz.
Narrowband & Broadband 1 - 10 GHz	133	1 m, 45°, Position 1	WFC/HRC Operate	No emissions above the specification limits.
Narrowband & Broadband 1 - 10 GHz	134	1 m, 45°, Position 2	WFC/HRC Operate	No emissions above the specification limits.
Narrowband & Broadband 1 - 10 GHz	135	1 m, 45°, Position 3	WFC/HRC Operate	No emissions above the specification limits.
Narrowband & Broadband 1 - 10 GHz	136	1 m, 45°, Position 3	GSE ON DUT ON (WFC/SBC operate)	No emissions above the specification limits.
			WFC/SBC	

Narrowband & Broadband 1 - 10 GHz	137	1 m, 45°, Position 2	Operate	No emissions above the specification limits.
Narrowband & Broadband 1 - 10 GHz	138	1 m, 45°, Position 1	WFC/SBC Operate	No emissions above the specification limits.

23. NEED FOR WAIVER (Continued)

(1) CE03 - These signals have been determined to be produced by the switching frequency of the INTERPOINT DC-DC converters used within the ACS. HST EMI systems engineering states: When compared against the HST bus impedance at 550Khz (5 ohms), the resulting voltage (690uvolts or 57dBuV) shows a margin of approximately 60dB or a factor of X1 000.

(2) RE02 - HST EMI systems engineering states: The ACS exceeded the ST-ICD-02 radiated emission requirements across a wide range of frequencies during the July 2000 (refer to NSI 24-07-1164) ACS EMC Test, refer to EM: FS&S 1522, Table 4. The worst case above specification emission was 26.3dB at 22.71 MHz or 56.4 dBuV/M. This gives a safety margin of approximately 69.6 dB. Reference EM: FS&S 1522 for specifics.

10.10 Cosmic Origins Spectrograph (COS) Deviations and Waivers

IRN 119

The Cosmic Origins Spectrograph (COS), STE-63, is relieved from the requirements of this ICD to the extent shown on the NASA approved deviation and waiver requests listed below and included on the following pages.

		Page	
10.10.1	IN0090-W-007, COS Weight Waiver	10.10-2	
10.10.2	IN0090-W-006A, COS Power Waiver	10.10-3	IRN 121
10.10.3	IN0090-W-009A, COS Static Envelope Waiver	10.10-9	IRN 125
10.10.4	IN0090-W-007B, COS Weight Waiver	10.10-13	IRN 126

REQUEST FOR DEVIATION/WAIVER (RFD/RFW)

1. DATE (YYMMDD): 000320

Form Approved OMB No 0704-0188

Public reporting burden for this collection of information is estimated to average 2 hours per response, including the time for reviewing instructions, searching existing data sources, gathering and maintaining the data needed and completing and reviewing the collection of information. Send comments regarding this burden estimate or any other aspect of this collection of information, including suggestion for reducing the burden to Washington Headquarters Services, Directorate of Information Operations and Reports, 1215 Jefferson Davis Highway, Suite 1204, Arlington, VA 22202-4302, and to the Office of Information and Regulatory Affairs, Office of Management and Budget, Washington, D.C. 20503

PLEASE DO NOT RETURN YOUR COMPLETED FORM TO EITHER OF THESE ADDRESSES. RETURN COMPLETED FORM TO THE GOVERNMENT ISSUING CONTRACTING OFFICER FOR THE CONTRACT/PROCURING ACTIVITY NUMBER LISTED IN ITEM 2 OF THIS FORM

2. PROCURING ACTIVITY NUMBER

3. DODAAC

4. ORIGINATOR
a. Ball Aerospace Technologies Corp

b. ADDRESS (Street, City, State, Zip code)
P.O. Box 1062
Boulder, CO 80306-1062

5. (X one) ○ Deviation X Waiver

6. (X one) ○ Minor X Major ○ Critical

7. DESIGNATION FOR DEVIATION/WAIVER

a. MODEL/TYPE	b. CAGE CODE	c. SYS. DESIG.	d. DEV/WAIVER NO.
COS	13993	IN0090A	IN0090-W-007

8. BASELINE AFFECTED: ○ Functional X Allocated ○ Product

9. OTHER SYSTEM CONFIGURATION ITEMS AFFECTED: ○ YES X NO

10. TITLE OF DEVIATION/WAIVER
COS WEIGHT

11. CONTRACT NO. AND LINE ITEM
NAS5-99089

12. PROCURING CONTRACTING OFFICER
a. NAME (First, Middle Initial, Last) Neil Square
b. CODE 442.0
c. TELEPHONE NO (301) 286-9228

13. CONFIGURATION ITEM NOMENCLATURE
COSMIC ORIGINS SPECTROGRAPH
COS

14. CLASSIFICATION OF DEFECT
a. CD NO N/A
b. DEFECT NO. N/A
c. DEFECT CLASSIFICATION N/A ○ MINOR X MAJOR ○ CRITICAL

15. NAME OF LOWEST PART/ASSEMBLY AFFECTED
COS

16. PART NO. OR TYPE DESIGNATION
547000-500

17. EFFECTIVITY
Serial Number 001 and up

18. RECURRING DEVIATION/WAIVER ○ YES ○ NO

19. EFFECT ON COST/PRICE
None if approved

20. EFFECT ON DELIVERY SCHEDULE
None if approved

21. EFFECT ON INTEGRATED LOGISTICS, SUPPORT, INTERFACE OR SOFTWARE
Interface with SIPE and carrier (ORUE) to be evaluated

22. DESCRIPTION OF DEVIATION/WAIVER
The maxium weight of the COS, not including the GFE, will be 821 lbs., and the center of gravity will be held within the following range: P1 = -20 to -50 in., P2 = 12 +\- 1 in., P3 = 12 +\- 1 in.

23. NEED FOR DEVIATION/WAIVER
Paragraph 4.5.3.1 (weight) of ST-ICD-02E requires a Max. weight of 760 lb with C.G. at P1 = -20 to -50 in, P2 = 12 +\- 1 in, P3 += 12 +\- 1 in

24. CORRECTIVE ACTION TAKEN

25. SUBMITTING ACTIVITY

a. TYPED NAME (First, Middle Initial, Last)	b. TITLE	c. SIGNATURE
John F. Meadows	Product Assurance Manager	John Meadows

26. APPROVAL/DISAPPROVAL
a. RECOMMEND ○ APPROVAL ○ DISAPPROVAL

b. APPROVAL ✓ APPROVED ○ DISAPPROVED
c. GOVERNMENT ACTIVITY: Deputy Program Manager/Technology for HST

d. TYPE NAME (First, Middle Initial, Last)	e. SIGNATURE	f. DATE SIGNED (YYMMDD)
John E. Decker	John E. Decker	000505

g. APPROVAL ✓ APPROVED ○ DISAPPROVED
h. GOVERNMENT ACTIVITY

i. TYPED NAME (First, Middle Initial, Last)	j. SIGNATURE	k. DATE SIGNED (YYMMDD)
[illegible] McGrath, Contracting Officer	Michael G. McGrath	00/05/11

DD Form 1694 APR 92 — Previous editions are obsolete.

REQUEST FOR DEVIATION/WAIVER (RFD/RFW)

1. DATE (YYMMDD): 010515

Form Approved OMB No 0704-0188

Public reporting burden for this collection of information is estimated to average 2 hours per response, including the time for reviewing instructions, searching existing data sources, gathering and maintaining the data needed and completing and reviewing the collection of information. Send comments regarding this burden estimate or any other aspect of this collection of information, including suggestions for reducing this burden to Washington Headquarters Services, Directorate for Information Operations and Reports, 1215 Jefferson Davis Highway, Suite 1204, Arlington, VA 22202-4302, and to the Office of Information and Regulatory Affairs, Office of Management and Budget, Washington, D.C. 20503

PLEASE DO NOT RETURN YOUR COMPLETED FORM TO EITHER OF THESE ADDRESSES. RETURN COMPLETED FORM TO THE GOVERNMENT ISSUING CONTRACTING OFFICER FOR THE CONTRACT/PROCURING ACTIVITY NUMBER LISTED IN ITEM 2 OF THIS FORM.

2. PROCURING ACTIVITY NUMBER

3. DCDAAC

4. ORIGINATOR
a. Ball Aerospace Technologies Corp
Dave Bickel

b. ADDRESS (Street, City, State, Zip code)
P.O. Box 1062
Boulder, CO 80306-1062

5. (X one): O Deviation X Waiver

6. (X one): O Minor X Major O Critical

7. DESIGNATION FOR DEVIATION /WAIVER

a. MODEL/TYPE	b. CAGE CODE	c. SYS. DESIG.	d. DEV/WAIVER NO.
COS	13993	IN0090A	IN0090-W-006A

8. BASELINE AFFECTED: O Functional X Allocated O Product

9. OTHER SYSTEM CONFIGURATION ITEMS AFFECTED: O YES X NO

10. TITLE OF DEVIATION/WAIVER: COS Power

11. CONTRACT NO. AND LINE ITEM: NAS5-99089

12. PROCURING CONTRACTING OFFICER
a. NAME (First, Middle Initial, Last): NEIL SQUARE
b. CODE: 442.0
c. TELEPHONE NO: (301) 286-9228

13. CONFIGURATION ITEM NOMENCLATURE: Cosmic Origins Spectrograph (COS)

14. CLASSIFICATION OF DEFECT: N/A
a. CD NO: N/A
b. DEFECT NO.: N/A
c. DEFECT CLASSIFICATION: N/A O MINOR X MAJOR O CRITICAL

15. NAME OF LOWEST PART/ASSEMBLY AFFECTED: COSMIC ORIGINS SPECTROGRAPH (COS)

16. PART NO. OR TYPE DESIGNATION: 547000-500

17. EFFECTIVITY: COS S/N 0001

18. RECURRING DEVIATION/WAIVER: O YES X NO

19. EFFECT ON COST/PRICE: None If Approved

20. EFFECT ON DELIVERY SCHEDULE: None If Approved

21. EFFECT ON INTEGRATED LOGISTICS, SUPPORT, INTERFACE OR SOFTWARE: None If Approved

22. DESCRIPTION OF DEVIATION/WAIVER: **Paragraph 4.6.1.1.4.2 and 4.7 of ST-ICD-02E allows maximum average orbital operate power of 150 watts, peak power of 250 watts (2 min.), 174 watts max as part of 150 average, and 58 watts hold power.**

23. NEED FOR DEVIATION/WAIVER
The maximum orbital average COS operate power occurs during the coldest condition and is 223 watts. The max. sustained power as part of this average is 223 watts. The peak power is 240 watts (2 min). For a safe condition in a cold HST, the power required is 70 watts (Ref. SER COS-SYS-025)

24. CORRECTIVE ACTION TAKEN: NOT APPLICABLE

25. SUBMITTING ACTIVITY: Ball Aerospace Technologies Corp.

a. TYPED NAME (First, Middle Initial, Last): David H. Bickel
b. TITLE: Project Engineer Quality Assurance
c. SIGNATURE: [signature]

26. APPROVAL/DISAPPROVAL
a. RECOMMEND O APPROVAL O DISAPPROVAL

b. APPROVAL: ● APPROVED O DISAPPROVED

c. GOVERNMENT ACTIVITY: Deputy Associate Director of Flight Projects for HST

d. TYPE NAME (First, Middle Initial, Last): David M. Scheve
e. SIGNATURE: [signature]
f. DATE SIGNED (YYMMDD): 9/21/01

g. APPROVAL: ● APPROVED O DISAPPROVED

h. GOVERNMENT ACTIVITY: [illegible]

i. TYPED NAME (First, Middle Initial, Last): MICHAEL E. McGRATH
j. SIGNATURE: [signature]
k. DATE SIGNED (YYMMDD): 01/09/24

DD Form 1694, APR 92 — *Previous editions are obsolete.*

Ball Aerospace & Technologies Corp.
Aerospace Systems Division
P.O. Box 1062
Boulder, Colorado 80306

Systems Engineering Report

Waiver IN0090-W006A
Page 2 of 6

SER NO. SYS-025 DATE 01-05-15 SHEET 1 OF 5

PROJECT TITLE	CAGE CODE	CII IN0090A
Cosmic Origins Spectrograph (COS)	13993	PROJECT CODE 20202

SUBJECT TITLE

Derivation of COS Power Waiver Values

PREPARED BY	DEPT NO.	DATE	APPROVED BY	DATE
Brian Osborne	1430764	5/15/01		5/15/01

SCOPE/TEXT (ATTACH ADDITIONAL SHEETS AS REQUIRED)

SUMMARY

Paragraphs 4.6.1.1.4.2 and 4.7 of ST-ICD-02E specify power limits for HST axial science instruments. These limits are summarized as follows:

Maximum allowable power usage (averaged over one orbit) = 150 watts
Maximum allowable sustained power (> 2 minutes) as part of this orbital average = 174 watts
Maximum allowable power at any given time (i.e. "peak power") = 250 watts (limited to 2 minutes per orbit)
Maximum allowable hold power (averaged over one orbit) = 58 watts

To arrive at the expected power usage for COS, the most recent power predictions from Greg Johnson (thermal analyst) and Phil Christon (electrical systems engineer) were used. These are the numbers presented at the monthly status reviews with GSFC. Margin was added to these numbers where appropriate and then short term power usage was evaluated and added to the totals as necessary. Short term usage refers to power which is not continuously dissipated during normal instrument steady state operations. For this instrument, short term power usage is essentially limited to mechanism and calibration lamp operation. The results of this analysis are presented below. The numbers presented are those which will be included in the COS power waiver request which will be submitted to GSFC shortly.

Maximum power usage (averaged over one orbit) = 223 watts
Maximum sustained power (> 2 minutes) as part of this orbital average = 223 watts
Maximum power at any given time (i.e. "peak power") = 240 watts
Cold safe power = 70 watts

Note that the cold safe power is given instead of a "hold" power. This is due to the ambiguity associated with defining exactly what a "hold" state is. Specifying a cold safe power instead is consistent with previous axial instrument builds.

DISTRIBUTION

BALL TECHNICAL LIBRARY
Ball: P. Christon, G. Johnson, R. Higgins, D. Bickel, D. Morgan, L. Remstad, S. Ross, D. Ebbets
GSFC: ~~Hsiao Smith~~ Julia Morris
CU: J. Green, J. Andrews, E. Wilkinson, K. Brownsberger
STSCI T. Keyes

A6356.BR2474[18A]—4/5/96 BR-2/474, 92/6

Introduction

Paragraphs 4.6.1.1.4.2 and 4.7 of ST-ICD-02E specify power limits for HST axial science instruments (SIs). These limits are summarized as follows:

1) Maximum allowable power usage (averaged over one orbit) = 150 watts
2) Maximum allowable sustained power (> 2 minutes) as part of this orbital average = 174 watts
3) Maximum allowable power at any given time (i.e. "peak power") = 250 watts (limited to 2 minutes per orbit)
4) Maximum allowable hold power (averaged over one orbit) = 58 watts

It has been known for some time that COS will exceed these values (as other SIs have) and will therefore need to submit an associated ICD waiver request. Submittal of this waiver had been delayed since the power predictions had been in a state of flux. Now that the power numbers have stabilized, the waiver will be submitted. This SER derives the power values which will be included in that waiver request.

Power Dissipating Components

A table summarizing the COS power situation is given in the next section. Before discussing the values in the table, however, a brief description of each of the entries in the table will be given:

1) **RIUs:** Government furnished remote interface units. Power characteristics well defined.

2) **MEB:** Instrument main electronics box. Power values determined by analysis and limited testing.

3) **LVPS:** Instrument low voltage power supply. Power values determined by analysis. Due to uncertainty in this analysis (especially in selecting the proper power converter efficiency values), a 12% margin was added as a separate entry in the table. The LVPS value includes LVPS power dissipation associated with heater operation. Since the amount of heater usage varies for different conditions, the LVPS value varies as well.

4) **DVA/DEB:** FUV detector vacuum assembly and detector electronics box. Flight units built and tested. Power characteristics well defined.

5) **MANIA:** NUV detector. This is a detector which was built, tested, and fully qualified as part of the STIS program. Power characteristics well defined.

6) **Heaters:** This value includes all the heaters used throughout the COS instrument. The amount of heater power required for various conditions depends on whether or not the COS instrument is hooked up to the HST aft shroud cooling system (ASCS). The baseline plan is for COS to indeed be hooked up to the ASCS, so that is what was assumed for this analysis.

Heater values were obtained by analysis and, due to associated uncertainty, a 6% margin was added as a separate entry in the table.

7) **Margin:** See entries 3 and 6 above.

8) **Mechanism:** Calculation of the mechanism power usage is summarized below. The table includes only OSM1, OSM2, and the aperture mechanism. Note that the rotation mechanisms for OSM1 and OSM2 are identical and thus the lone entry of 'OSM rotation' covers both. In the table, voltage is squared and then divided by resistance to arrive at a maximum power per phase. Since there are two phases per mechanism, this value is then multiplied by 2 to arrive at a maximum power. The table shows that from a power standpoint, OSM rotation provides the worst case mechanism power. The FUV detector vacuum assembly includes a door mechanism and a redundant wax actuator which can be used to open the door if the mechanism were to fail. Door operation dissipates 5 watts and actuator operation dissipates 15 watts, neither of which is greater than OSM rotation.

Motor	Maximum Volt. (V)	Resistance ohms	Max. Power (W/phase)	Max. Total Power (W)
OSM Rotation	28	95	8.3	16.5
OSM Focus	28	265	3.0	5.9
Aperture	28	261	3.0	6.0

9) **Lamps:** Calculation of the lamp power usage is summarized below. Lamp current and voltage are multiplied to arrive at a maximum lamp power. This value is then divided by a calibration lamp controller (CLC) board efficiency term to arrive at a total power number CLC efficiency values were provided by James Simons.

Lamp Type	Max. Curr. (mA)	Voltage (V)	Maximum Power (W)	CLC Efficiency	Total Power (W)
Deuterium	10	400	4.0	0.78	5.1
PtNe	18	200	3.6	0.78	4.6

Results

The table below summarizes the COS power usage for five different scenarios. Four of these correspond to a specific power limit specification given in the ICD (see above). The other (average power per orbit, "nominal") is given for informational purposes. Each scenario is discussed briefly below:

Component	Avg./orbit ("nominal")	Avg./orbit (worst case)	Avg./orbit (cold safe)	Peak	Max. Sustained
RIU A	3	3	3	3	3
RIU B	1	1	1	1	1
MEB	36	36	0	36	36
LVPS (w/ASCS)	27	40	17	44	40
DVA	5	5	0	5	5
DEB	48	48	0	48	48
NUV (MAMA)	23	23	0	23	23
Heaters (w/ASCS)	7	53	43	53	53
Margin LVPS (12%)	4	6	3	7	6
Margin heaters (6%)	1	3	3	3	3
Mechanism	1	0	0	17	0
Lamp	1	5	0	0	5
Total(w/ASCS)	**157**	**223**	**70**	**240**	**223**

Average per orbit (i.e. "nominal") power:
This is the expected per orbit power usage during normal instrument operation under "normal" operating conditions. The detector, heater, and electronics values correspond to those listed in the "Nominal or Hot Operate" column of the table prepared by Greg Johnson (COS thermal analyst) for the monthly status review (MSR) presentations. History has shown that Hot Operate power predictions come closest to matching the typical power dissipation once on orbit. The mechanism contribution for this column was calculated by assuming a typical mechanism "on time" of 6 minutes per 96 minute orbit (i.e. mechanism is on for 6% of an orbit → 17 W * .06 = 1 W. The lamp contribution assumes a typical "on-time" of 10 minutes per orbit (i.e. lamp on for 10% of an orbit → 5 W * .1 = .5 W → round up to 1 W.

Average per orbit (worst case) power:
A worst case orbit needs to be considered in order to arrive at a value to be submitted as part of the power waiver request. It turns out that the worst case scenario occurs when the HST is in a cold orientation with the 3 other axial instruments turned off, and a flat field observation taking place. For this column, the detector, heater, and electronics values correspond to those listed in the "Cold Operate w/3 SI's in Hold" column of the MSR table. Since a flat field observation could conceivably last an entire orbit, a full 5 watts for the entire orbit is entered for the lamp contribution. It is assumed that simultaneous lamp and mechanism operation will not take place, thus the mechanism contribution for this case is zero. (Other potential worst case orbits were considered. For example, if it were possible that an orbit include 14 minutes of mechanism operation and 48 minutes of lamp operation, the entries for lamp and mechanism

would each be 2.5 watts, for a total of 5. Such a large percentage of mechanism and lamp operation is considered to be unlikely}.

Average per orbit (cold safe) power:
Due to the ambiguity associated with defining exactly what a "hold" state is, it has been customary to specify the cold/safe power rather than any kind of "hold" power. Therefore, it is the cold safe power which will be specified in the waiver request. The values given for this column in the above table correspond to those listed in the "Cold Safe" column of the MSR table. There are no detector, mechanism, or lamp operations in the instrument safe state.

Peak power:
The values for peak power are identical to those for the worst case orbital average (discussed above) except different values are used for mechanism and lamp power. For peak power, the contribution of these components need not be averaged out over the entire orbit. Therefore, the single biggest contributor (OSM rotation) is used. For this column, it is assumed that simultaneous mechanism operation will not take place on COS.

Maximum sustained Power:
This column is identical to the worst case orbital average column. Since that particular column uses a continuous lamp/mechanism operation during the entire orbit, the power dissipation is constant for the entire orbit. Thus, the average power and the maximum sustained power are identical.

Conclusion

Based on the table presented in the previous section, the values which will be included in the COS waiver request are as follows:

1) Maximum power usage (averaged over one orbit) = 223 watts
2) Maximum sustained power (> 2 minutes) as part of this orbital average = 223 watts
3) Maximum power at any given time (i.e. "peak power") = 240 watts
4) Cold safe power = 70 watts

There is a limited amount of current available for COS which will be sharing current with some of the ASCS electronics. The table below gives the COS current draw, at 240 watts, for different supply voltages. The project will need to consider these when developing operational constraints for the HST.

Bus Voltage	Voltage (V)	Power (W)	Current (A)
Nominal	28	240	8.6
Minimum Operate	24	240	10.0
Minimum Survival	21	240	11.4

REQUEST FOR DEVIATION/WAIVER (RFD/RFW)

1. DATE (YYMMDD): 010615

Form Approved
OMB No 0704-0188

Public reporting burden for this collection of information is estimated to average 2 hours per response, including the time for reviewing instructions searching existing data sources, gathering and maintaining the data needed and completing and reviewing the collection of information. Send comments regarding this burden estimate or any other aspect of this collection of information, including suggestion for reducing this burden to Washington Headquarters Services, Directorate of Information Operations and Reports, 1215 Jefferson Davis, Highway, Suite 1204, Arlington, VA 22202-4302, and to the Office of Information and Regulatory Affairs, Office of Management and Budget, Washington, D.C 20503

PLEASE DO NOT RETURN YOUR COMPLETED FORM TO EITHER OF THESE ADDRESSES. RETURN COMPLETED FORM TO THE GOVERNMENT ISSUING CONTRACTING OFFICER FOR THE CONTRACT/PROCURING ACTIVITY NUMBER LISTED IN ITEM 2 OF THIS FORM

2. PROCURING ACTIVITY NUMBER

3. DODAAC

4. ORIGINATOR

a. Ball Aerospace Technologies Corp

Dave Bickel

b. ADDRESS (Street, City, State, Zip code)
P.O. Box 1062
Boulder, CO 80306-1062

5. (X one)
O Deviation X Waiver

6. (X one)
O Minor X Major O Critical

7. DESIGNATION FOR DEVIATION /WAIVER

a. MODEL/TYPE	b. CAGE CODE	c. SYS. DESIG.	d. DEV/WAIVER NO.
COS	13993	IN0090A	IN0090-W-009A

8. BASELINE AFFECTED
O Functional X Allocated O product

9. OTHER SYSTEM CONFIGURATION ITEMS AFFECTED
O YES X NO

10. TITLE OF DEVIATION/WAIVER
COS STATIC ENVELOPE

11. CONTRACT NO. AND LINE ITEM
NAS5-99089

12. PROCURING CONTRACTING OFFICER
a. NAME (First, Middle Initial, Last): NEIL SQUARE
b. CODE: 442.0
c. TELEPHONE NO: (301) 286-9228

13. CONFIGURATION ITEM NOMENCLATURE
Cosmic Origins Spectrograph (COS)

14. CLASSIFICATION OF DEFECT
N/A

a. CD NO	b. DEFECT NO.	c. DEFECT CLASSIFICATION N/A
N/A	N/A	O MINOR O MAJOR O CRITICAL

15. NAME OF LOWEST PART/ASSEMBLY AFFECTED
COS

16. PART NO. OR TYPE DESIGNATION
547000-500

17. EFFECTIVITY
S/N 001 AND Subsequent

18. RECURRING DEVIATION/WAIVER
O YES X NO

19. EFFECT ON COST/PRICE
NONE

20. EFFECT ON DELIVERY SCHEDULE
NONE

21. EFFECT ON INTEGRATED LOGISTICS, SUPPORT, INTERFACE OR SOFTWARE
NONE

22. DESCRIPTION OF DEVIATION/WAIVER
ST-ICD-02E IRN 106 Figure 4.3-1 Axial ORI Static Envelope: Dimension -P2 and -P3 from the "A" fitting is 5.70 MAX TYP 2 PL. Request dim to be 5.760 MAX in localized area indicated in the attached Lockheed Martin memo (10/27/00), and 5.732 MAX elsewhere. Also, +P3 from the "A" fitting is 29.10 MAX. Request dim to be 29.35 MAX. The maximum enclosure dimension would change from 34.80 MAX to 35.11 MAX for P3 and to 34.86 for P2.

23. NEED FOR DEVIATION/WAIVER
The addition of an external radiator to an enclosure outboard panel requires additional space. The configuration of access covers, particulary in the vicinity of an instrument optic, require additional space as well.

24. CORRECTIVE ACTION TAKEN
NOT APPLICABLE

25. SUBMITTING ACTIVITY
Ball Aerospace Technologies Corp.

a. TYPED NAME (First, Middle Initial, Last)	b. TITLE	c. SIGNATURE
David H. Bickel	Project Engineer Quality Assurance	D Bickel

26. APPROVAL/DISAPPROVAL
a. RECOMMEND O APPROVAL O DISAPPROVAL

b. APPROVAL
XX APPROVED O DISAPPROVED

c. GOVERNMENT ACTIVITY
Deputy Associate Director of Flight Projects for HST

d. TYPE NAME (First, Middle Initial, Last)	e. SIGNATURE	f. DATE SIGNED (YYMMDD)
David M. Scheve	David M. Scheve	020208

g. APPROVAL
XX APPROVED O DISAPPROVED

h. GOVERNMENT ACTIVITY
HST Procurement Manager

i. TYPED NAME (First, Middle Initial, Last)	j. SIGNATURE	k. DATE SIGNED (YYMMDD)
[illegible]	[illegible]	020219

DD Form 1694, APR 92 *Previous editions are obsolete.*

LOCKHEED MARTIN

LOCKHEED MARTIN TECHNICAL OPERATIONS
7474 Greenway Center Drive, Suite 200
Greenbelt, MD 20770

LMSS/P 508098

To: Frank Cepollina

Date: October 27, 2000

From: James Cooper

Subject: COS Aft Cover Envelope Allowance

Reference: Goddard CCR 4753, COS Envelope Waiver

C.C: Hsiao Smith, Mark Turczyn

Background:

Ball Aerospace applied for a waiver to ST-ICD-02 for the COS Instrument enclosure envelope. This waiver, processed through the Goddard Change Control Board as *CCR 4753*, requested relief from the existing instrument envelope limits. As written, the waiver has been recommended for disapproval by Lockheed. However, some envelope increase, less than the original COS request, has been deemed acceptable by *Lockheed* and the *HST Project*.

ST-ICD-02 Figure 4.3-1 specifies a maximum dimension of 5.700" from the A-Latch centerline to the –P2 and –P3 surfaces of any replacement SI. The *HST Project* has granted COS relief from this number up to a maximum of 5.732" (ref. September COS Monthly presentation and pending CCR 4753 response).

COS engineers have presented a design change that meets the 5.732" requirement, but the resulting Aft Cover design is undesirable. In order to improve this design, *Ball* has requested an additional envelope allowance in the immediate area of their optics arm.

Response:

After review of all available data, *Lockheed* recommends that additional envelope be granted for COS as shown in the attached figure. The new envelope limit, in the local area defined in Detail A of the attached figure, shall be 5.760" from the A-Latch centerline. Note that this increased envelope only applies to the area immediately adjacent to the COS optics, and does NOT grant relief for the entire COS Aft Cover. The previously approved 5.732" limit shall apply for the remaining areas of COS, as previously detailed (ref. CCR 4753 response).

LOCKHEED MARTIN

A new waiver request must be submitted by *Ball*, reflecting final envelope exceedances. This will be used to process a change to ST-ICD-02 and officially document the COS envelope limits.

J. Cooper, LMTO
HST FS&S Metrology Verification Director

Concurrence:

D. Connolly, LMTO
HST FS&S Deputy Program Manager

Distribution:

F. Cepollina/442
M. Kienlen/442
H. Smith/442
M. Turczyn/442
Data Center/LMTO
D. Connolly/LMTO
J. Kelley/LMTO
J. Gay/LMTO
J. Pellicciotti/LMTO
B. Osborne/Ball Aerospace

LOCKHEED MARTIN

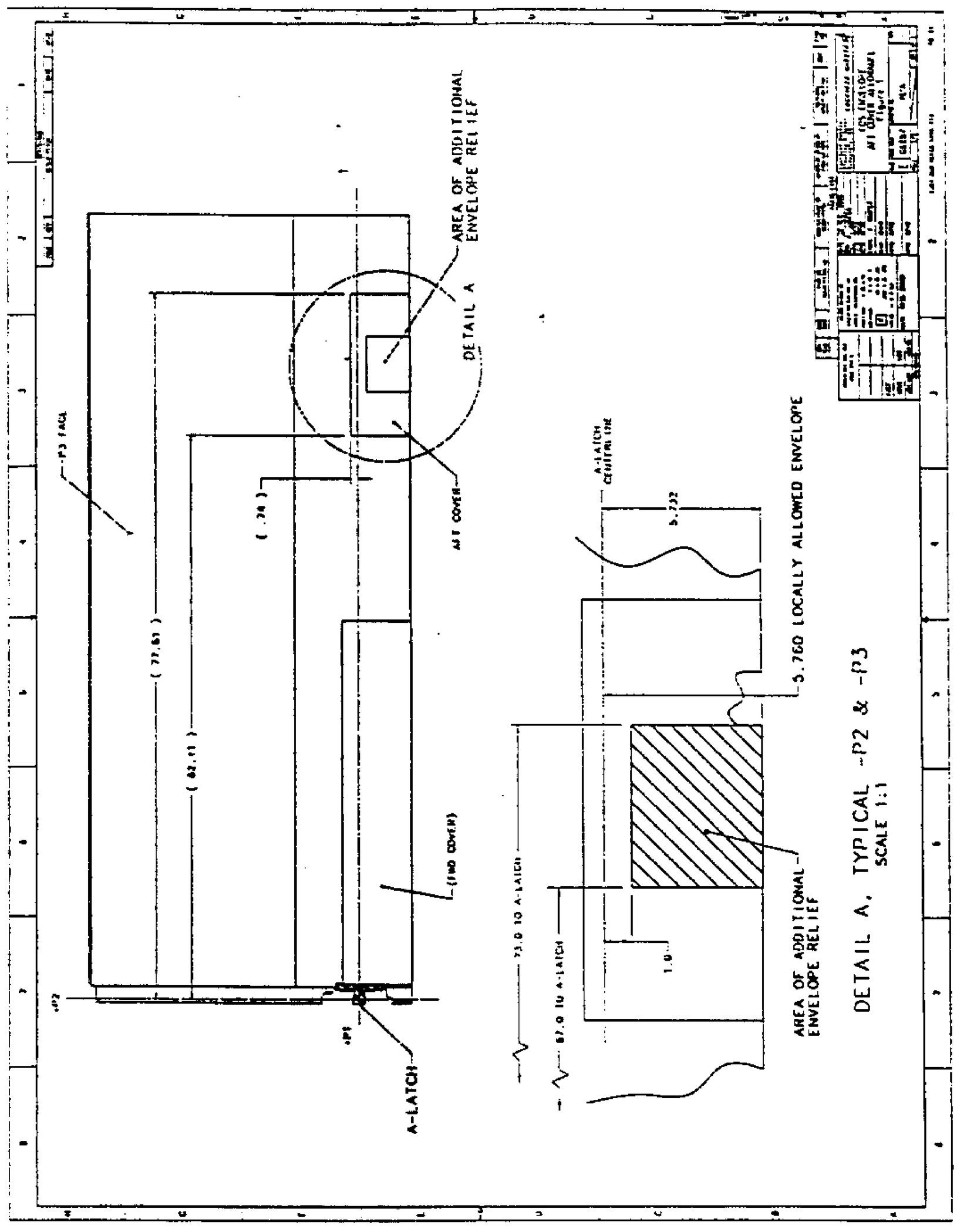

REQUEST FOR DEVIATION/WAIVER (RFD/RFW)

1. DATE YYMMDD: 020416

Form Approved OMB No 0704-0188

Public reporting burden for this collection of information is estimated to average 2 hours per response, including the time for reviewing instructions, searching existing data sources, gathering and maintaining the data needed and completing and reviewing the collection of information. Send comments regarding this burden estimate or any other aspect of this collection of information, including suggestions for reducing this burden to Washington Headquarters Services, Directorate for Information Operations and Reports, 1215 Jefferson Davis Highway, Suite 1204, Arlington, VA 22202-4302, and to the Office of Information and Regulatory Affairs, Office of Management and Budget, Washington, D.C. 20503

PLEASE DO NOT RETURN YOUR COMPLETED FORM TO EITHER OF THESE ADDRESSES. RETURN COMPLETED FORM TO THE GOVERNMENT ISSUING CONTRACTING OFFICER FOR THE CONTRACT/PROCURING ACTIVITY NUMBER LISTED IN ITEM 2 OF THIS FORM.

2. PROCURING ACTIVITY NUMBER

3. DODAAC

4. ORIGINATOR

a. Ball Aerospace Technologies Corp

b. ADDRESS (Street, City, State, Zip code)
P.O. Box 1062
Boulder, CO 80306-1062

5. (X one) O Deviation X Waiver

6. (X one) O Minor X Major O Critical

7. DESIGNATION FOR DEVIATION/WAIVER

a. MODEL/TYPE	b. CAGE CODE	c. SYS. DESIG.	d. DEV/WAIVER NO.
COS	13993	IN0090A	IN0090-W-007B

8. BASELINE AFFECTED: O Functional X Allocated O Product

9. OTHER SYSTEM CONFIGURATION ITEMS AFFECTED: O YES X NO

10. TITLE OF DEVIATION/WAIVER
COS WEIGHT

11. CONTRACT NO. AND LINE ITEM
NAS5-99089

12. PROCURING CONTRACTING OFFICER
a. NAME (First, Middle Initial, Last) Neil Square
b. CODE 442.0
c. TELEPHONE NO (301) 286-9228

13. CONFIGURATION ITEM NOMENCLATURE
COSMIC ORIGINS SPECTROGRAPH
COS

14. CLASSIFICATION OF DEFECT
a. CD NO N/A
b. DEFECT NO. N/A
c. DEFECT CLASSIFICATION N/A O MINOR X MAJOR O CRITICAL

15. NAME OF LOWEST PART/ASSEMBLY AFFECTED
COS

16. PART NO. OR TYPE DESIGNATION
547000-500

17. EFFECTIVITY
Serial Number 001 and up

18. RECURRING DEVIATION/WAIVER
X YES O NO

19. EFFECT ON COST/PRICE
None if approved

20. EFFECT ON DELIVERY SCHEDULE
None if approved

21. EFFECT ON INTEGRATED LOGISTICS, SUPPORT, INTERFACE OR SOFTWARE
Interface with SIPE and carrier (ORUE) to be evaluated

22. DESCRIPTION OF DEVIATION/WAIVER
The maxium weight of the COS, not including the GFE, will be 852 lbs., and the center of gravity will be held within the following range: P1 = -20 to -50 in., P2 = 12 +\- 1.7 in., P3 = 12 +\- 1.7 in.

23. NEED FOR DEVIATION/WAIVER
Paragraph 4.5.3.1 (weight) of ST-ICD-02E requires a Max. weight of 750 lb with C.G. at P1 = -20 to -50 in, P2 = 12 +\- 1.7 in, P3 += 12 +\- 1.7 in

24. CORRECTIVE ACTION TAKEN No C/A applicable

25. SUBMITTING ACTIVITY

a. TYPED NAME (First, Middle Initial, Last)	b. TITLE	c. SIGNATURE
John F. Meadows	Product Assurance Manager	John F Meadows

26. APPROVAL/DISAPPROVAL
a. RECOMMEND O APPROVAL O DISAPPROVAL

b. APPROVAL
X APPROVED O DISAPPROVED

c. GOVERNMENT ACTIVITY
Deputy Associate Director of Flight Projects for HST

d. TYPE NAME (First, Middle Initial, Last)	e. SIGNATURE	f. DATE SIGNED (YYMMDD)
Edward O. Ruitberg	Edward O. Ruitberg	020802

g. APPROVAL
X APPROVED O DISAPPROVED

h. GOVERNMENT ACTIVITY
Procurement Manager HST Project

i. TYPED NAME (First, Middle Initial, Last)	j. SIGNATURE	k. DATE SIGNED (YYMMDD)
Michael E. McGrath	Michael E. McGrath	020806

DD Form 1694, APR 92 — Previous editions are obsolete

(NEW PAGE CREATED BY IRN 126)