HUBBLE SPACE TELESCOPE
LIBRARY #TM-025933

ST-ICD-03F
29 JUNE 1984

LMSC RELEASED CONTROLLED

LEVEL II
INTERFACE CONTROL DOCUMENT

RADIAL SI TO OTA AND SSM

ST/CM-08

SPACE TELESCOPE PROJECT

SUBMITTED IN ACCORDANCE WITH REQUIREMENTS OF
CONTRACT NAS 8-32697, DPD 539

Approved by NASA

LOCKHEED MISSILES & SPACE COMPANY, INC.
SPACE SYSTEMS DIVISION • SUNNYVALE, CALIFORNIA

ST-ICD-03F
29 JUNE 1984

SPACE TELESCOPE
LEVEL II
INTERFACE CONTROL DOCUMENT
RADIAL SCIENTIFIC INSTRUMENTS TO OPTICAL TELESCOPE ASSEMBLY AND SUPPORT SYSTEMS MODULE (RADIAL SI TO OTA & SSM)

APPROVED: W.F. Wright
W.F. WRIGHT
SSM PROJECT MANAGER
LOCKHEED MISSILES & SPACE

APPROVED: D.J. McCarthy
D.J. McCARTHY
OTA PROJECT MANAGER
PERKIN-ELMER CORPORATION

APPROVED: George M. Levin
G.M. LEVIN, MANAGER
SCIENTIFIC INSTRUMENTS OFFICE
GODDARD SPACE FLIGHT CENTER

APPROVED: F. Speer
F.A. SPEER
SPACE TELESCOPE PROJECT
MANAGER
MARSHALL SPACE FLIGHT
CENTER

Approved by NASA

SPECIFICATION NO. ST-ICD-03

CONFIGURATION CHART

PAGE 1

AS OF 29 June 1984

SPECIFICATION ISSUE	ECP'S	EFFECTIVITY
REVISION F 06-29-84	IRN 34, 11-19-82, PCN:AN0955, CCBD:AN2-01-0833 IRN 35, 11-22-82, PCN:AN0795, CCBD:AN2-01-0836 IRN 36, 01-07-83, PCN:AN0902, CCBD:AN2-01-0860 IRN 37, 03-08-83, PCN:AN0997, CCBD:AN2-01-0887 IRN 38, 03-21-83, PCN:AN1010, CCBD:AN2-01-0897 IRN 39, 12-09-83, PCN:AN1118, CCBD:AN2-01-0944 IRN 40, 03-15-84, PCN:AN1132, CCBD:AN2-01-1011 IRN 41, 03-15-84, PCN:AN1187, CCBD:AN2-01-1014 IRN 42, 03-15-84, PCN:AN1148, CCBD:AN2-01-1024 MSFC Rev "F" Authorization PCN: AN1521 Contracting Officers Letter: AP54A-84-222 dated 31 May 1984	N/A

TA-09-10/77 (OT)

RELEASE DATE:

DOCUMENT CHANGE RECORD

SHEET:

CHANGE DOCUMENT:	ST-ICD-03	F	29 June 1984	COPY NO.
	NUMBERED	REVISION	DATED	

CHANGE (DATE)	TO INCORPORATE THE CHANGE INTO THE DOCUMENT: 1. ADD PAGES;	2. REMOVE PAGES;	OTHER COMMENTS REGARDING THIS CHANGE (AUTH., INSTRUCT., ETC.)
IRN 45 (11-20-84)	iia, 3.6-1	3.6-1	(PIRN 3158); Mount Point Conductance. See SCM-2000. PCN: AN1337 CCBD: AN2-01-1136
IRN 46 (11-20-84)	iia, vii, x, 3.7-5, 3.7-12, 3.7-13,	iia, vii, x, 3.7-5	(PIRN 3169); Radiated Electrical Field Emission Requirements. See SCM-2000. PCN: AN1469 CCBD: AN2-01-1140
IRN 47 (11-20-84)	iia, xi, 10.1-1, 10.1-7, 10.1-8	iia, xi, 10.1-1	(PIRN 3172); SI Generated Ripple & Noise. See SCM-2000. PCN: AN1571 CCBD: AN2-01-1154
IRN 48 (11-20-84)	iia, 3.5-7	iia, 3.5-7	(PIRN 3161); CG Location of Radial SI. See SCM-2000. PCN: AN1104 CCBD: AN2-01-1159
IRN 49 (11-20-84)	iia, 3.3-12	iia, 3.3-12	(PIRN 3174); Radial SI Alignment to OTA. See SCM-2000. PCN: AN1680 CCBD: AN2-01-1163
Admin. Changes (11-20-84)	iia, 3.3-7, 3.3-8, 3.3-11, 3.3-23, 3.5-2	iia, 3.3-7, 3.3-8, 3.3-11, 3.3-23, 3.5-2	The purpose of the administrative changes is to correct incorrect incorporated changes of previous IRNs.
IRN 50 (5-03-85)	iia, 3.5-4	iia, 3.5-4	(PIRN 3175); Orbiter Cargo Bay Acoustic Levels. See SCM-2000. PCN: AN1346 CCBD: AN2-01-1248
(Supersedes pg. iia dated 20 November 1984)			

MSFC - Form 3948 (March 1983) NOTE: After revising the document, file this sheet in document preceding table of contents.

RELEASE DATE:

DOCUMENT CHANGE RECORD

CHANGE DOCUMENT:	ST-ICD-03 (NUMBERED)	F (REVISION)	29 June 1984 (DATED)	COPY NO.

CHANGE (DATE)	TO INCORPORATE THE CHANGE INTO THE DOCUMENT: 1. ADD PAGES:	2. REMOVE PAGES:	OTHER COMMENTS REGARDING THIS CHANGE (AUTH., INSTRUCT., ETC.)
IRN 51 (8-28-85)	iib, xi, 10.1-1, 10.1-9	xi, 10.1-1	(PIRN 3177); WF/PC EMC Requirements. See SCM-2000. PCN: AN1953 CCBD: AN2-01-1303
IRN 52 (9-06-85)	iib, xi, 10.1-1, 10.1-10, 10.1-11	iib, xi, 10.1-1	(PIRN 3176); WF/PC Radiated Susceptibility. See SCM-2000. PCN: AN1760 CCBD: AN2-01-1308
IRN 53 (2-12-86)	iib, xi, 3.7-1, 10.1-1, 10.1-12	iib, xi, 3.7-1, 10.1-1	(PIRN 3180); WF/PC Power Allocation Increase. See SCM-2000. PCN: AN2142 CCBD: AN2-01-1416
IRN 54 (3-17-86)	iib, 3.3-2, 3.3-2a, 3.3-3, 3.3-4, 3.3-6, 3.3-8, 3.3-9, 3.3-10, 3.3-11, 3.3-13, 3.3-15, 3.3-18, 3.3-19, 3.3-21, 3.3-23, 3.3-23a, 3.3-24, 3.6-3	iib, 3.3-2, 3.3-3, 3.3-4, 3.3-6, 3.3-8, 3.3-9, 3.3-10, 3.3-11, 3.3-13, 3.3-15, 3.3-18, 3.3-19, 3.3-21, 3.3-23, 3.3-24, 3.6-3	(PIRN 3178R1); WF/PC Ultraviolet Flooding Modification. See SCM-2000. PCN: AN1927 CCBD: AN2-01-1449
IRN 55 (5-5-86)	iib, 3.3-23	iib, 3.3-23	(PIRN 3183); WF/PC Ground Strap Captive Bolt. See SCM-2000. PCN: AN2250 CCBD: AN2-01-1469
IRN 56 (5-5-86)	iib, xi, 3.5-7, 10.1-1, 10.1-13	iib, xi, 3.5-7, 10.1-1	(PIRN 3182); WF/PC Mass Increase Waiver Request. See SCM-2000. PCN: AN2284 CCBD: AN2-01-1470
Admin. Change (8-15-86)	iib, 2.1-1, 3.6-1, 3.3-9	iib, 2.2-1, 3.6-1, 3,3-9	The purpose of the administrative change is to add documentation to the list as needed.

(Supersedes pg. iib dated 5-5-86)

RELEASE DATE:

DOCUMENT CHANGE RECORD

SHEET: iic

CHANGE DOCUMENT: ST-ICD-03 (NUMBERED) F (REVISION) 29 June 1984 (DATED) COPY NO.

CHANGE (DATE)	TO INCORPORATE THE CHANGE INTO THE DOCUMENT: 1. ADD PAGES:	2. REMOVE PAGES:	OTHER COMMENTS REGARDING THIS CHANGE (AUTH., INSTRUCT., ETC.)
IRN 57 (12-01-86)	iic, 10.1-14, 10.1-15	xi, 3.7-9, 10.1-1	(PIRN 3173R1); Ripple & Noise Susceptibility. See SCM-2000. PCN: AN1572 CCBD: AN2-01-1572
IRN 58 (02-06-87)	iic, 3.6-8, 3.6-9	iic, 3.6-8, 3.6-9	(PIRN 3185); Second Day Deployment. See SCM-2000. PCN: AN1228 CCBD: AN2-01-1580
IRN 59 (08-06-87)	iic, vi, x, 3.6-18, 3.6-18a	iic, vi, x, 3.6-18	(PIRN 3126R4); SSM Venting Provisions. See SCM-2000. PCN: AN0716 CCBD: AN2-01-1644
IRN 60 (7-15-88)	iic, xi, 10.1-1, 10.1-16, 10.1-17, 10.1-18, 10.1-19, 10.1-20, 10.1-21, 10.1-22, 10.1-23, 10.1-24, 10.1-25, 10.1-26, 10.1-27, 10.1-28, 10.1-29	iic, xi, 10.1-1	(PIRN 3187) WF/PC Power Allocation (DAR-011) See SCM-2000 PCN: AN2970 CCBD: AN2-01-1732
IRN 61 (9-23-88)	iic, 3.3-4, 3.3-9	iic, 3.3-4, 3.3-9	(PIRN 3186R1) WF/PC-SSM Light Seal Redesign See SCM-2000 PCN: AN2832 CCBD: AN2-01-1836
IRN 62 (05-16-89)	iic, 10.1-1, XI, 10.1-30, 10.1-31, 10.1-32, 10.1-33, 10.1-34, 10.1-35, 10.1-36, 10.1-37, 10.1-38, 10.1-39, 10.1-40, 10.1-41, 10.1-42, 10.1-43, 10.1-44, 10.1-45, 10.1-46, 10.1-47	iic, xi, 10.1-1	(PIRN 3188) WF/PC Power Allocation (DAR 012) PCN: AN3483 CCBD: AN2-01-1945

(Supersedes pg. 11c dated 23 September 1988)

MSFC - Form 3948 (March 1983) NOTE: After revising the document, file this sheet in document preceding table of contents.

RELEASE DATE: 02-7-92

DOCUMENT CHANGE RECORD

CHANGE DOCUMENT: ST-ICD-03, RADIAL ST TO OTA AND SSM (NUMBERED) | F (REVISION) | 29 JUNE 1984 (DATED) | COPY NO.

CHANGE (DATE)	TO INCORPORATE THE CHANGE INTO THE DOCUMENT: 1. ADD PAGES:	2. REMOVE PAGES:	OTHER COMMENTS REGARDING THIS CHANGE (AUTH., INSTRUCT., ET)	
IRN 063 (10-2-89)	iid, 3.6-7	3.6-7	(PIRN 3190) Orbital Inclination PCN: AN3715 CCBD: AN2-01-2030	ADMIN CHANGE
IRN 064 (10-11-89)	iid, 3.3-7	iid, 3.3-7	(PIRN 3189) P-E TBR Removal from Ground Handling Interface PCN: AN3721 CCBD: AN2-01-2033	ADMIN CHANGE
Admin Change	iid	iid		
IRN 065 (1-31-90)	iid, xi, 10.1-1 10.1-48, 10.1-49	iid, xi, 10.1-1	(PIRN 3191) WF/PC-1 Multi-Layer Insulation Deviation (JPL-DAR-016) PCN: AN3866 CCBD: AN2-01-2115	ADMIN CHANGE
IRN 066 (3-27-90)	iid, xi, 10.1-1, 10.1-50-10.1-67	iid, xi, 10.1-1	(PIRN 3192) WF/PC-1 Power Allocation (JPL DAR 015) PCN: AN3873 CCBD: AN2-01-2158	ADMIN CHANGE
IRN 067 (10-11-91)	iid, 3.3-1, 3.3-3 3.3-3a	iid, 3.3-1, 3.3-3,	(PIRN 3193) WF/PC II ARM and ICD Envelope , CCR2987 GSFC Minutes No. 357 (date format correction)	
Admin Change	iid	iid		
IRN 068 (2-7-92)	iid, ix, 3-3-1, 3.3-3, 3.3-3a	iid, ix, 3.3-1, 3.3-3, 3.3-3a	Correction of IRN 067 dated 10/11/91 WF/PC II ARM and ICD Envelope CCR: 2987 PIRN: 3193 Level II GSFC CCB Minutes No. 367	

LMSC RELEASED CONTROLLED

(Supersedes page iid dated 15 October 1991)

MSFC - Form 886 (May 1975) NOTE: After revising the document, file this sheet in document preceding table of contents.

DOCUMENT CHANGE RECORD

RELEASE DATE: 21 JANUARY 1994

CHANGE DOCUMENT: RADIAL SI TO OTA AND SSM, ST-ICD-03

COPY NO.

ST-ICD-03	F	29 JUNE 1984
NUMBERED	*REVISION*	*DATED*

CHANGE (DATE)	INCORPORATE THE CHANGE INTO THE DOCUMENT: 1. ADD PAGES:	2. REMOVE PAGES:	OTHER COMMENTS REGARDING THIS CHANGE (AUTH., INSTRUCT., ETC)
IRN 69 2/7/92	iie, xi, 10.1-1, 10.1-67 thru 10.1-71	xi, 10.1-1	(PIRN 3194) WFPC II DAR 17 SHEAR PIN HOLE DIAMETER, CCR 3193 GSFC MIN. NO. 367
ADMIN CHANGE	10.1-50 THRU 10.1-66	10.1-50 THRU 10.1-66	ADMIN CHANGE TO CORRECT IRN 66, DAR 15 RELEASE, TO CORRECT PAGE NUMBER ERRORS
IRN 70 8-28-92	iie, x, 3.6-2, 3.6-4, 3.6-5, 3.6-6, 3.6-11	iie, x, 3.6-2, 3.6-4, 3.6-5, 3.6-6, 3.6-11	CHANGE PREDICTED THERMAL VALUES TO ACTUALS PIRN: 3195R1 CCR: 3364 CCB MINUTES #386
IRN 71 2/12/93	iie, iii, iv, v, vi, ix, ixa, xi, xii, xiii, 1.1-1, 1.1-2, 2.1-1, 3.3-1, 3.3-2, 3.3-2a, 3.3-2b, 3.3-2c, 3.3-3, 3.3-3a, 3.3-4, 3.3-4a, 3.3-4b, 3.3-4c, 3.3-5, 3.3-6, 3.3-7, 3.3-7a, 3.3-8, 3.3-9, 3.3-10, 3.3-11, 3.3-11a, 3.3-11b, 3.3-12, 3.3-12a, 3.3-13, 3.3-14, 3.3-15, 3.3-16, 3.3-17, 3.3-17a, 3.3-17b, 3.3-18, 3.3-18a, 3.3-18b, 3.3-19, 3.3-20, 3.3-20a, 3.3-21, 3.3-22, 3.3-23, 3.3-23a, 3.3-24, 3.3-25, 3.4-1, 3.4-1a, 3.4-2, 3.4-2a, 3.4-3, 3.4-3a, 3.4-3b, 3.4-3c, 3.4-6, 3.4-7, 3.4-10, 3.5-1, 3.5-2, 3.5-5, 3.5-7, 3.5-8, 3.6-3, 3.6-8, 3.6-9, 3.6-13, 3.6-14, 3.6-16, 3.6-17, 3.7-1, 3.7-2, 3.7-5, 3.11-1, 3.12-1	iie, iii, iv,v,vi,ix, xi, xii, xiii, 1.1-1, 1.1-2, 2.1-1, 3.3-1, 3.3-2, 3.3-3, 3.3-3a, 3.3-4, 3.3-5, 3.3-6, 3.3-7, 3.3-8, 3.3-9, 3.3-10, 3.3-11, 3.3-12, 3.3-13, 3.3-14, 3.3-15, 3.3-16, 3.3-17, 3.3-18, 3.3-19, 3.3-20, 3.3-21, 3.3-22, 3.3-23, 3.3-23a, 3.3-24, 3.4-1, 3.4-2, 3.4-3, 3.4-6, 3.4-7, 3.4-10, 3.5-1, 3.5-2, 3.5-5, 3.5-7, 3.6-3, 3.6-8, 3.6-9, 3.6-13, 3.6-14, 3.6-16, 3.6-17, 3.7-1, 3.7-2, 3.7-5, 3.11-1, 3.12-1	ADDITIONS & CLARIFICATIONS TO ST-ICD-03 PIRN: 3196R1 CCR: 3510 GSFC CCB MINUTES #399
IRN 72 5/21/93	iie,xi,10.1-1,10.1-72,10.1-73, 10.1-74, 10.1-75, 10.1-76, 10.1-77, 10.1-78 86K-FLFSS-0034-01x	iie, xi, 10.1-1	Additions of WFPC-II DAR'S 18,19,20 and 21 PIRN'S 3197, 3198, 3199, 3200 CCR'S 3661, 3662, 3663, 3677 GSFC CCB MINUTES #409

LMSC RELEASED CONTROLLED

MSA 144

NOTE: After revising the document, file this sheet in document preceding table of contents

DOCUMENT CHANGE RECORD

Release Date: 06/18/03

DOCUMENT TITLE	DOCUMENT NUMBER	REVISION	DATED
Radial SI to OTA and SSM Interface Control Document	ST-ICD-03	F	29 June 1984

CHANGE (DATE)	TO INCORPORATE THE CHANGE INTO THE DOCUMENT: 1. ADD PAGES	2. REMOVE PAGES	OTHER COMMENTS REGARDING THIS CHANGE(AUTH.,INSTR)
IRN 73 (27 Aug. 1993)	iif, ix, 3.3-17, 3.3-17a, 3.3-17b	ix, 3.3-17, 3.3-17a, 3.3-17b	WFPC I/II Mirror Protective Cover Drawings PIRN 3201, CCR 3727, GSFC CCB Minutes #418.
IRN 74 (15 Oct. 1993)	iif, xi, 10.1-1, 10.1-79, 10.1-80, 10.1-81, 10.1-82, 10.1-83, 10.1-84, 10.1-85, 10.1-86, 10.1-87	iif, xi, 10.1-1	Addition of WF/PC-II Peak Power, DAR-023 PIRN 3203 CCR 3841 GSFC CCB Minutes #421.
IRN 75 (05 Nov. 1993)	iif, 3.3-2, 3.3-2a 3.3-2b	iif, 3.3-2, 3.3-2a, 3.3-2b	(PIRN 3202); Incorporate changes to Fig. 3.3-1 and Fig. 3.3-1a into ST-ICD-03. HSTP CCR #3741. HSTP CCB Minutes #424, approved 11/05/93.
IRN 76 (16 Nov. 2001)	iif, iv, vi, vii, ix, ixa, x, 1.1-2, 2.1-1, 3.2-1, 3.2-2, 3.3-7a, 3.3-12, 3.3-17a, 3.3-17b, 3.3-20b, 3.4-1, 3.4-1a, 3.4-2, 3.4-2b, 3.4-2c, 3.4-2d, 3.4-3, 3.4-3a, 3.4-3b, 3.4-3d, 3.4-4, 3.4-5, 3.6-14, 3.6-14a, 3.6-20, 3.7-5, 3.7-10, 3.8-1, 3.8-1a, 3.10-1	iif, iv, vi, vii, ix, ixa, x, 1.1-2, 2.1-1, 3.2-1, 3.3-7a, 3.3-12, 3.3-17a, 3.3-17b, 3.4-1, 3.4-1a, 3.4-2, 3.4-3, 3.4-3a, 3.4-3b, 3.4-4, 3.4-5, 3.6-14, 3.7-5, 3.7-10, 3.8-1, 3.10-1	(PIRN 3205R1). Incorporate changes to reflect SM1 into ST-ICD-03. HSTP CCR #4861. HSTP CCB Minutes #567, approved 11/16/01.
IRN 77 (13 Dec. 2002)	iif, ix,xiii, 3.3-1, 3.3-2d, 3.3-2e, 3.3-2f, 3.3-2g, 3.3-3a, 3.3-4d, 3.3-4e, 3.3-4f	iif, ix, xiii, 3.3-1, 3.3-3a	(PIRN 3206R1) Incorporate WFC3 Static Dynamic Envelope into ST-ICD-03. HSTP CCR #4985. HSTP CCB Minutes #582, approved 12/13/02.

NOTE: After revising the document, file this sheet in document preceeding table of contents.

DOCUMENT CHANGE RECORD

Release Date: 09/17/03

DOCUMENT TITLE	DOCUMENT NUMBER	REVISION	DATED
Radial SI to OTA and SSM Interface Control Document	ST-ICD-03	F	29 June 1984

CHANGE (DATE)	TO INCORPORATE THE CHANGE INTO THE DOCUMENT: 1. ADD PAGES	2. REMOVE PAGES	OTHER COMMENTS REGARDING THIS CHANGE(AUTH.,INSTR)
IRN 78 (24 Jan. 2003)	iig, xi, 10.1-1, 10.1-88	xi, 10.1-1	(PIRN 3207R1) Incorporate WFC3 Weight Waiver (WFC3-W-002) into ST-ICD-03. HSTP CCR #4994. HSTP CCB Minutes #584, approved on 01/24/03.
IRN 79 (08 Aug. 2003)	iig, xi, 10.1-1, 10.1-89, 10.1-90, 10.1-91	iig, xi, 10.1-1	(PIRN 3209) Incorporate WFC3 Thermal Coating Waiver (WFC3-W-004) into ST-ICD-03. HSTP CCR #5009. HSTP CCB Minutes #589, approved on 08/08/03.
IRN 80 (22 Aug 2003)	iig, iv, v, xi, 3.5-1, 3.5-2, 3.5-2a	iig, iv, v, xi, 3.5-1, 3.5-2	(PIRN 3210R1) Incorporate WFC3 liftoff and landing load factors into ST-ICD-03. HSTP CCR #5025. HSTP CCB Minutes #590, approved on 08/22/03.

NOTE: After revising the document, file this sheet in document preceeding table of contents.

TABLE OF CONTENTS

Section	Page
1.0 SCOPE	1.1-1
1.1 Purpose	1.1-1
1.2 Organization	1.1-1
1.3 Content Status	1.1-1
1.4 ICD Change Procedure	1.1-1
2.0 APPLICABLE DOCUMENTS	2.1-1
2.1 Government Documents	2.1-1
2.2 Non Government Documents	2.1-1
2.2.1 SI Documents	2.1-1
3.0 REQUIREMENTS	3.1-1
3.1 Interface Functions	3.1-1
3.1.1 OTA	3.1-1
3.1.2 SSM	3.1-1
3.2 General Interface Characteristics	3.2-1
3.2.1 Interfaces	3.2-1
3.2.2 Coordinate Systems	3.2-1
3.3 Mechanical Interfaces	3.3-1
3.3.1 SI Envelope	3.3-1
3.3.2 Mounting Points and Constraints	3.3-1
3.3.2.1 Mount Point Fitting Interfaces	3.3-7
3.3.2.2 Latching Mechanism Interface	3.3-7
3.3.3 SSM - SI Radiator Light Baffle	3.3-7
3.3.4 Guiderail Interface	3.3-7
3.3.5 Ground Support Equipment Interfaces	3.3-7
3.3.5.1 WFPC-I Ground Handling Interface	3.3-7
3.3.5.2 WFPC-II & All Radial ORIs Ground Handling Interface	3.3-7a
3.3.5.3 Ground Operations Mirror Protective Cover	3.3-7a IRN 071
3.3.6 Space Support Equipment Interface	3.3-12
3.3.6.1 SSE Handhold Interface	3.3-12
3.3.6.2 Tether Ring Interfaces	3.3-12
3.3.6.3 Space Operations Mirror Protective Cover	3.3-12

(Supersedes page iii dated 29 June 1984)

LMSC RELEASED CONTROLLED

TABLE OF CONTENTS (Continued)

Section		Page	
3.3.7	Alignment	3.3-12	
3.3.7.1	Alignment of the Radial SI Within the OTA	3.3-12	
3.3.7.2	Short Term Stability of OTA/SI Alignment	3.3-12a	IRN 071
3.3.7.3	Long Term Stability of OTA/SI Alignment	3.3-18	
3.3.8	Orbital Removal and Installation	3.3-18	
3.3.8.1	Crew and SI Safety During Change-Out	3.3-18	
3.3.9	Electrical Connector Bracket	3.3-19	
3.3.9.1	Test Connector Location	3.3-19	
3.3.9.2	Ground Strap Location	3.3-19	
3.3.10	Venting, Pressurization and Purge	3.3-19	
3.3.10.1	WFPC-I	3.3-19	IRN 071
3.3.10.2	WFPC-II	3.3-20	
3.3.10.2.1	WFPC-II Purge	3.3-20	
3.3.10.3	WFC3 (TBD)	3.3-20b	IRN 076
3.4	Optical Interfaces	3.4-1	
3.4.1	Optical Throughput	3.4-1a	IRN 071
3.4.2	Pupil Properties	3.4-1a	
3.4.3	Focal Plane Properties	3.4-3	
3.4.4	Stray Light	3.4-3	
3.4.4.1	Aft Shroud Light Leak Environment	3.4-3	
3.4.4.2	Focal Plane Hub Straylight (Deleted)	3.4-3	IRN 071,076
3.4.4.3	Straylight Model	3.4-3a	IRN 071
3.4.4.4	Radial SI Calibration Lamp	3.4-3a	IRN 076
3.4.4.5	Secondary Mirror Straylight	3.4-3a	
3.4.5	Optical Input	3.4-3a	
3.4.6	SI Fold Mirror Envelope	3.4-3a	
3.5	Structural Interface	3.5-1	
3.5.1	Loads	3.5-1	
3.5.1.1	Ground Handling Loads	3.5-1	
3.5.1.2	SI Latching Loads	3.5-1	
3.5.1.3	Ground Transportation Loads	3.5-1	
3.5.1.4	Lift-off and Landing Overall Load Factors	3.5-1	
3.5.1.5	Emergency and 9.6 FPS Landing Overall Load Factors	3.5-2	
3.5.1.6	Random Mechanical Vibration	3.5-2a	IRN 080
3.5.1.7	Acoustic Loads	3.5-2a	

TABLE OF CONTENTS (Continued)

Section		Page	
	3.5.1.8 In-Orbit Loads	3.5-2a	IRN 080
	3.5.1.8.1 Maximum EV Crewmember Loads on Handholds/Equipment Tethers	3.5-2a	
	3.5.1.8.2 Guiderail Loads	3.5-5	
	3.5.1.8.3 SSE Equipment Tether Attachment Provision Loads	3.5-5	IRN 071
	3.5.1.8.4 Flight Pick-Off Mirror Cover and +V2, -V2 Handrail Loads	3.5-5	
3.5.2	Structural Characteristics	3.5-5	
3.5.3	Mass Properties	3.5-7	
	3.5.3.1 Weight of WFPC-I	3.5-7	IRN 071
	3.5.3.2 Weight of WFPC-II and Follow on ORIs	3.5-7	
	3.5.3.3 Center of Gravity	3.5-7a	
3.6	Environmental Interface	3.6-1	
3.6.1	Thermal Interfaces	3.6-1	
	3.6.1.1 Operational Thermal Interface	3.6-1	
	3.6.1.1.1 Mount Point Conductance	3.6-1	
	3.6.1.1.2 Electrical Cable and Ground Strap Conductance	3.6-2	
	3.6.1.1.3 Internal Radiative Heat Transfer	3.6-2	
	3.6.1.1.3.1 SI Surface Temperature and Properties	3.6-2	
	3.6.1.1.3.2 Focal Plan Structure	3.6-2	
	3.6.1.1.3.3 SSM Aft Shroud Effective Sink Temperatures	3.6-2	
	3.6.1.1.4 External Ground Strap Radiation	3.6-5	
	3.6.1.1.5 Thermal Power	3.6-5	
	3.6.1.1.5.1 Thermal Power Mode Definitions	3.6-7	
	3.6.1.1.5.2 Normal Science Mission Thermal Power Configuration	3.6-7	
	3.6.1.1.5.3 Orbital Heat Fluxes for External Radiator Thermal Design	3.6-7	
	3.6.1.1.5.4 Solar Array and HGA Obscurations	3.6-7	
	3.6.1.1.6 Radiation from SSM to SI External Radiator	3.6-7	
	3.6.1.2 Non-Operational Thermal I/F	3.6-8	

TABLE OF CONTENTS (Continued)

Section		Page	
	3.6.1.2.1 Pre-Flight	3.6-8	
	3.6.1.2.1.1 Transportation and Storage	3.6-8	
	3.6.1.2.1.2 Prelaunch and Ground Testing	3.6-8	
	3.6.1.2.2 Flight	3.6-8	
	3.6.1.2.2.1 Launch and Ascent Temps ..	3.6-8	
	3.6.1.2.2.2 Deployment	3.6-8	
	3.6.1.2.2.3 Retrieval	3.6-8	
	3.6.1.2.2.4 Scheduled Maintenance	3.6-10	
	3.6.1.2.2.5 Safing	3.6-10	
	3.6.1.2.2.6 Entry	3.6-10	
	3.6.1.2.2.7 Post Landing	3.6-12	
	3.6.1.3 Contingency Retrieval	3.6-12	
3.6.2	Magnetic Environment.....	3.6-12	
	3.6.2.1 Magnetic Fields	3.6-12	
	3.6.2.2 SSM and SI Magnetic Field Intensity.....	3.6-12	
	3.6.2.3 OTA Magnetic Field Intensity	3.6-12	
3.6.3	Contamination Control.....	3.6-14	
	3.6.3.1 Volumetric Cleanliness	3.6-14	
	3.6.3.2 Surface Cleanliness	3.6-14	
	3.6.3.3 Material Outgassing	3.6-14	
	3.6.3.4 Molecular Outgassing Reqts. .	3.6-14	IRN 071
3.6.4	Ionizing Particle Radiation.....	3.6-14	
	3.6.4.1 Galactic Cosmic Environment .	3.6.14	IRN
3.6.5	Meteoroid Environment.....	3.6-14a	076
3.6.6	SSM Pressure Environment and SI Differential Pressure.....	3.6-18	IRN 059
3.6.7	Humidity	3.6-18	
3.7	Electrical Power	3.7-1	
3.7.1	Power Buses.....	3.7-1	
3.7.2	Fusing	3.7-1	
3.7.3	Switching.....	3.7-1	
3.7.4	Operating Voltage.....	3.7-3	
3.7.5	Bus Control Circuit.....	3.7-3	
3.7.6	Section not used.....	3.7-3	

(Supersedes page vi dated 12 February 1993)

TABLE OF CONTENTS (Continued)

Section		Page	
3.7.7	Grounding of SI to ST Structure.....	3.7-3	
	3.7.7.1 Mount Point Fitting Resistance	3.7-4	
	3.7.7.2 Multi-Layer Insulation	3.7-4	
3.7.8	EMC	3.7-4	
	3.7.8.1 Dynamic Impedance	3.7-4	
	3.7.8.2 In-Rush Current	3.7-4	
	3.7.8.3 SI Generated Ripple & Noise .	3.7-4	
	3.7.8.4 Ripple & Noise Susceptibility	3.7-5	
	3.7.8.5 Transient Susceptibility	3.7-5	
	3.7.8.6 Survival	3.7-5	
	3.7.8.7 Radiated Susceptibility (E-Field) (Peak Field Strengths)	3.7-5	
	3.7.8.8 Radiated Electric Field Emissions	3.7-5	IRN 046
3.7.9	6.144 MHZ Clock Interface.....	3.7-5	
3.8	Pointing Control	3.8-1	
3.8.1	Fine Pointing.....	3.8-1	
3.8.2	Mode I, II and III Target Acquisition and Verification.....	3.8-1	
3.8.3	Scans.....	3.8-1	
	3.8.3.1 Linear Scan	3.8-1a	IRN 076
	3.8.3.2 Continuous Scan	3.8-1a	
	3.8.3.3 Dwell Scan	3.8-3	
	3.8.3.4 Scan Control Parameters	3.8-3	
	3.8.3.5 Scan Times	3.8-3	
	3.8.3.6 Peak-up Mode	3.8-5	
3.8.4	Solar System Object Tracking.....	3.8-5	
3.9	Maneuver Characteristics	3.9-1	
3.10	Alignment Stability of SIs/Uncompensated Momentum	3.10-1	IRN 076
3.11	Interface Connectors and Pin Assignments	3.11-1	
3.11.1	Connectors.....	3.11-1	
3.11.2	Pin Assignments.....	3.11-2	

(Supersedes page vii dated 20 November 1984)

TABLE OF CONTENTS (Continued)

List of Figures		Page	
3.2-1	Radial SI Coordinate System	3.2-2	IRN 076
3.3-1	Radial SI Static Envelope	3.3-2	
3.3-1A	Radial ORI Static Envelope (3 pages)	3.3-2a	IRN 071
3.3-1B	WFC3 Maximum Static Envelope (4 pages)	3.3-2d	IRN 077
3.3-2	WFPC I Pickoff Mirror and Support Arm	3.3-3	IRN
3.3-2A	WFPC-II and WFC3 Pickoff Mirror and Support Arm	3.3-3a	068, 077
3.3-3	Radial SI Dynamic Envelope	3.3-4	
3.3-3A	Radial ORI Dynamic Envelope (3 pages)	3.3-4a	IRN 071
3.3-3B	WFC3 Dynamic Envelope (3 pages)	3.3-4d	IRN 077
3.3-4	Mount "A" Interface	3.3-5	
3.3-5	Radial SI Mount Points B & C Interface	3.3-6	
3.3-6	Latching Mechanism Interface	3.3-8	
3.3-7	Light Baffle Geometry Radial SI External Radiator to SSM Interface	3.3-9	
3.3-8	Radiator and Light Baffle	3.3-10	
3.3-9	Radial SI Guiderail Location	3.3-11	
3.3-9a	WFPC-I Guiderail Location	3.3-11a	IRN
3.3-9b	WFPC-II Guiderail Location	3.3-11b	071
3.3-10	SI/GSE/SSE Hardpoints	3.3-13	
3.3-11	SSE Positioning Handhold Interface	3.3-14	
3.3-12	SSE Attachment Provision and Tether Location/ Access Envelope	3.3-15	
3.3-13	SSE Attachment Provisions and Equipment Tether Interface Details	3.3-16	
3.3-14	WFPC-I Pick-off Mirror Envelope and Ground Operations Protective Cover	3.3-17	IRN 073
3.3-14a	Radial ORI GSE Mirror Protective Cover	3.3-17a	IRN
3.3-14b	Radial ORI SSE Mirror Protective Cover	3.3-17b	071, 076
3.3-14d	Positioning Handrail +V2 Side	3.3-18a	
3.3-14e	Positioning Handrail -V2 Side	3.3-18b	
3.3-15	Radial SI Electrical Connector Bracket I/F ..	3.3-21	
3.3-16	Radial SI Electrical Connector Jacking Rod I/F	3.3-22	IRN 071
3.3-17	Test Connector and Ground Strap Interface Locations (Details)	3.3-23	
3.3-17a	Clock Reversal Connector Location	3.3-23a	IRN 044

(Supersedes page ix dated 16 November 2001)

TABLE OF CONTENTS (Continued)

List of Figures		Page	
3.3-18	Radial SI Vent and Purge Location	3.3-24	
3.3-19	WFPC Vent Configuration	3.3-25	IRN 071
3.4-1	OTA Entrance Pupil	3.4-2	
3.4-1a	Position of Paraxial Focus & Max. Encircled Energy for the As-Built HST	3.4-2a	IRN 071
3.4-1b	OTA Nominal Spectral Throughput (2000-11000Å)	3.4-2b	IRN 076
3.4-1c	OTA Nominal Spectral Throughput (1000-2000Å)	3.4-2c	
3.4-1d	HST Focal Plane Format	3.4-2d	
3.4-2	Field Curvature Characteristics	3.4-4	
3.4-3	Field Curvature and Astigmatism	3.4-5	
3.4-3a	Space Telescope Straylight Design	3.4-3b	IRN 071
3.4-3b	Hindle Shell Interferogram of the Secondary Mirror, taken 31 August 1981	3.4-3c	
3.4-3c	0% Vignetting of OTA Focal Plane for -V3 Arm	3.4-3d	IRN 076
3.4-4	Optical Light Envelope which must not be violated by Radial SI Pick-Up Mirror	3.4-7	
3.4-5	Radial SI Pick-Up Mirror Envelope Viewed at Normal Incidence	3.4-8	
3.4-6	Unvignetted Field of View Radial SI	3.4-9	
3.5-1	Mechanical Random Vibration	3.5-3	
3.5-2	Radial SI Acoustic Levels During Ascent	3.5-4	
3.5-3	SI Generalized Mass vs Mode Frequency	3.5-6	

TABLE OF CONTENTS (Continued)

List of Figures		Page	
3.6-1	SI Surface Temperature and Thermal Interface Surface Properties Characteristics Located Within the Aft Shroud	3.6-3	
3.6-2	Pickoff-Arm/Mirror Effective Sink Temperatures	3.6-4	IRN 070
3.6-3	Effective Sink Temperature Distribution SI Operating and in Hold Mode	3.6-6	
3.6-4	Solar Array and High Gain Antenna Obscuration, Surface Properties and Temperatures	3.6-10	
3.6-5	Varying Magnetic Field at Radial SI Due to ST Sources	3.6-13	
3.6-6	Particle Size Distribution Curves	3.6-15	
3.6-6A	Aft Shroud Orbital Pressure Profile	3.6-18a	IRN 059
3.6-7	Maximum SI Wall Differential Pressure Versus a Ratio of Vent Area to Volume	3.6-19	
3.6-8	Galactic Cosmic Environment	3.6-20	IRN 076
3.7-1	Typical SSM/OTA/SI Power Interface	3.7-2	
3.7-2	ST Power Dynamic Impedance at SI Connector ..	3.7-6	
3.7-3	In-Rush Time Current Profile	3.7-7	
3.7-4	SI Generated Ripple and Noise Limits	3.7-8	
3.7-5	SI Equipment Ripple and Noise Susceptibility	3.7-9	
3.7-6	Transient Susceptibility Test Waveforms	3.7-10	
3.7-7	6.144 MHz Clock Interface	3.7-11	
3.7-8	Limit for RE02 Narrowband Radiated Emissions	3.7-12	IRN
3.7-9	Limit for RE02 Broadband Radiated Emissions .	3.7-13	046
3.8-1	Pointing Accuracy and Stability During Scans	3.8-2	
3.8-2	Scan Patterns	3.8-4	
3.8-3	Maneuver Time Required To Limit Rate to 0.21 arc sec/sec	3.8-6	
3.8-4	Preliminary Small-Angle Maneuver Times	3.8-7	
3.9-1	Maneuver Time Profile	3.9-2	

(Supersedes page x dated 28 August 1992)

TABLE OF CONTENTS (Continued)

Tables		Page	
1.4-1	TBR/TBD List	1.1-2	
3.5-1	Load Factors (g's) for Radial Scientific Instrument	3.5-2	
3.5-2	Load Factors (g's) for WFC3 Mounted on SSE	3.5-2	IRN 080
3.6-1	Sink Temperatures (°C)	3.6-9	IRN
3.6-2	Maximum External ionizing Particle Radiation	3.6-16	071
3.6-3	Maximum Internal Ionizing Particle Radiation	3.6-17	
3.7-1	Circuit Protection	3.7-3	
3.11-1	Power Connector "A"	3.11-3	
3.11-2	Power Connector "B"	3.11-4	
3.11-3	Signal/Command "A" Connector	3.11-5	
3.11-4	Signal/Command "B" Connector	3.11-6	
II	Reflecting Combined DAR004 and 005 Acoustic Levels	10.1-6	

Appendix			
10	APPENDIX	10.1-1	IRN
10.1	WF/PC Deviations and Waivers	10.1-1	072
10.1.1	Deviation No. WF/PC-002	10.1-2	
10.1.2	Deviation No. WF/PC-004	10.1-3	
10.1.3	Deviation No. WF/PC-005	10.1-5	
10.1.4	Deviation No. WF/PC-008	10.1-7	IRN 047
10.1.5	Waiver: WF/PC EMC	10.1-9	IRN 051
10.1.6	Deviation No. WF/PC-010	10.1-10	IRN 052
10.1.7	Deviation No. LMSC-139	10.1-12	IRN 053
10.1.8	No Deviation number assigned	10.1-13	IRN 056
10.1.9	Deviation No. WF/PC-009	10.1-14	IRN 057
10.1.10	Deviation No. WF/PC-011	10.1-16	IRN 060
10.1.11	Deviation No. WF/PC-012	10.1-30	IRN 062
10.1.12	WF/PC Multi-layer Insulation Deviation (JPL-DAR-016)	10.1-48	IRN 065
10.1.13	WF/PC Power Allocation DAR-015	10.1-50	IRN 066
10.1.14	WF/PC-2 Shear Pin Hole Diameter DAR-017	10.1-67	IRN 069
10.1.15	WF/PC-II EMC Requirements DAR-018	10.1-72	IRN
10.1.16	WF/PC-II Magnetic Requirements DAR-019	10.1-73	072
10.1.17	WF/PC-II EMC Requirements DAR-020	10.1-74	
10.1.18	WF/PC-II Static Envelope DAR-021	10.1-75	
10.1.19	WF/PC-II Peak Power DAR-023	10.1-79	IRN 074
10.1.20	WFC3 Weight Waiver (WFC3-W-002)	10.1-88	IRN 078
10.1.21	WFC3 Thermal Coating Waiver (WFC3-W-004)	10.1-89	IRN 079

GLOSSARY

AM	Amplitude Modulation	IRN 071
BPI	Bits Per Inch	
C&DH	Command & Data Handling	
CCB	Configuration Control Board	
CG	Center of Gravity	
COSTAR	Corrective Optics Space Telescope Axial Replacement	IRN 071
CW	Continuous Wave	
DAR	Deviation Authorization Request	
ECP	Engineering Change Proposal	IRN 071
ECD	Estimated Completed Date	
EMC	Electro Magnetic Compatibility	
EPS	Electrical Power System	
EV	Extra Vehicular	
FHST	Fixed Head Star Tracker	
FGS	Fine Guidance Sensor	
FOC	Faint Object Camera	
FOS	Faint Object Spectrograph	
FPS	Focal Plane Structure	
GRU	Ground Replaceable Unit	
GSE	Ground Support Equipment	
GSFC	Goddard Space Flight Center	
HIORP	Hubble Independent Optics Review Panel	IRN 071
HRS	High Resolution Spectrograph	
HSP	High Speed Photometer	
ICD	Interface Control Document	
IFWG	Interface Working Group	
IRD	Interface Requirements Document	
K	Ground Strap Conductance	
KSC	Kennedy Space Center	IRN 071

LMSC RELEASED CONTROLLED

LMSC	Lockheed Missiles & Space Company
MLI	Multi-Layer Insulation
MSFC	Marshall Space Flight Center
NICMOS	Near Infrared Camera Multi Object Spectrometer
ORU	Orbit Replaceable Units
OTA	Optical Telescope Assembly
P-E	Perkin-Elmer
PCS	Pointing Control System
PIRN	Preliminary Interface Revision Notice
PIT	Processor Interface Table
PM	Primary Mirror
ppm	Parts Per Million
Q	Heat Loss
RECP	Record Engineering Change Proposal
RGA	Rate Gyro Assembly
RIU	Remote Interface Unit
RM	Remote Module
RMS	Root Mean Squared
RSU	Remote Sensing Unit
SA	Solar Array
SI	Scientific Instrument
SIPE	Science Instrument Protective Enclosure
SSE	Space Support Equipment
SSM	Support Systems Module
ST	Space Telescope
STOCC	Space Telescope Operations Control Center
STR	Science Tape Recorder
TBD	To Be Determined
TBR	To Be Resolved
WFC3	Wide Field Camera 3
WFPC	Wide Field Planetary Camera

IRN 077

(Supersedes page xiii dated 12 February 1993)

1.0 SCOPE

1.1 Purpose. This Interface Control Document (ICD) defines and controls the detailed designs of the Radial Scientific Instrument (SI) to Optical Telescope Assembly (OTA) and Support Systems Module (SSM) interface necessary to assure form, fit and functional compatibility within the Space Telescope (ST) Program. The contents of this ICD are responsive to the requirements of the radial SI portion of the SI to OTA and SSM Interface Requirements Document, STR-02 (Latest Revision).

1.2 Organization. This ICD has been structured to define the "standard" interface design as provided by the OTA and SSM to all known or potential radial SI's and to define for each radial SI the particular use of that standard design which is appropriate to that SI. This document pertains to WFPC-I and follow-on radial ORIs. In using this ICD for follow-on ORIs, care must be exercised to avoid applying WFPC-I unique specifications to the new ORI. IRN 071

1.3 Content Status. The data presented in this document represent current firm design definition in all cases except for those noted with a To Be Determined (TBD) or a To Be Resolved (TBR). 'TBD' indicates the need for data which are currently not available, even in preliminary form. 'TBR' indicates that the data supplied are the best information available and must be resolved between two or more contractors.

Removal of either a 'TBD' or 'TBR' can only be accomplished by acceptance of an Engineering Change Proposal (ECP) or a Deviation Authorization Request (DAR) processed through the GSFC Level II and III Configuration Control Boards (CCB). IRN 071

1.4 ICD Change Procedure. Changes to this ICD can be initiated by the Government or Contractors through the appropriate NASA CCB and its established procedures.

LMSC RELEASED CONTROLLED

TABLE 1.4-1
TBR/TBD LIST

Paragraph	Subject	Respon. Org.	Status	ECD	
3.3.10.3	WFC3	LMSS	OPEN	01/02	IRN 076

2.0 APPLICABLE DOCUMENTS

The following documents form a part of this Interface Control Document (ICD) to the extent specified. In the event of conflict between the following referenced documents and this ICD, the following order of precedence is followed: 1. STR-02; 2. This document; 3. All other reference documents.

2.1 Government Documents

2.2 Non Government Documents

2.2.1 SI Documents

a. Space Telescope System Thermal Analysis (SI DataBook), ST/SE-24 Section E, LMSC/D979908. — Admin. Change

b. HST Servicing Mission Contamination Control Requirements, STR-29 Revision A, December 17, 1996. — IRN 071, 076

3.0 REQUIREMENTS

3.1 Interface Functions. The Space Telescope (ST) is an unmanned orbiting astronomical observatory consisting of an Optical Telescope Assembly (OTA), a complement of Science Instruments (SIs) and a Support Systems Module (SSM).

3.1.1 OTA. The OTA provides error signals to the SSM for pointing control, the mechanical/thermal juncture between the OTA and SSM, the structural mounting and alignment accomodations for the SIs, and the electrical harness for the OTA-SI interconnect to the SSM. Additionally, the OTA provides structural mounting and alignment references for the SSM rate gyro assembly and fixed head star trackers.

3.1.2 SSM. The SSM provides the structural support, electrical power, communications, initial command decoding/storage/distribution, data accumulation/routing/storage/transmission, timing signals, environmental control and protection, aperture door, light shield, attitude maneuvering, and pointing control for the OTA/SI assembly.

3.2 General Interface Characteristics

3.2.1 Interfaces. The interfaces with the SIs consist of electrical, mechanical, structural, and optical interfaces with the OTA; environmental interfaces (thermal, pressure, loads, contamination) with the OTA/SSM in combination, and functional (power, commands, telemetry, data, pointing control, structural, environmental, SSE) interfaces with the SSM.

3.2.2 Coordinate Systems. An orthogonal coordinate system is defined, (ref. Figure 3.2-1) for a radial SI, having axes R1, R2 and R3, in which, when installed in Space Telescope, the R1 axis is nominally parallel to the ST V3 axis. The origin, O_R, of the R1, R2 and R3 system is the center of the hemispherical SI to OTA registration fitting (Point "A"). IRN 076

IRN 076

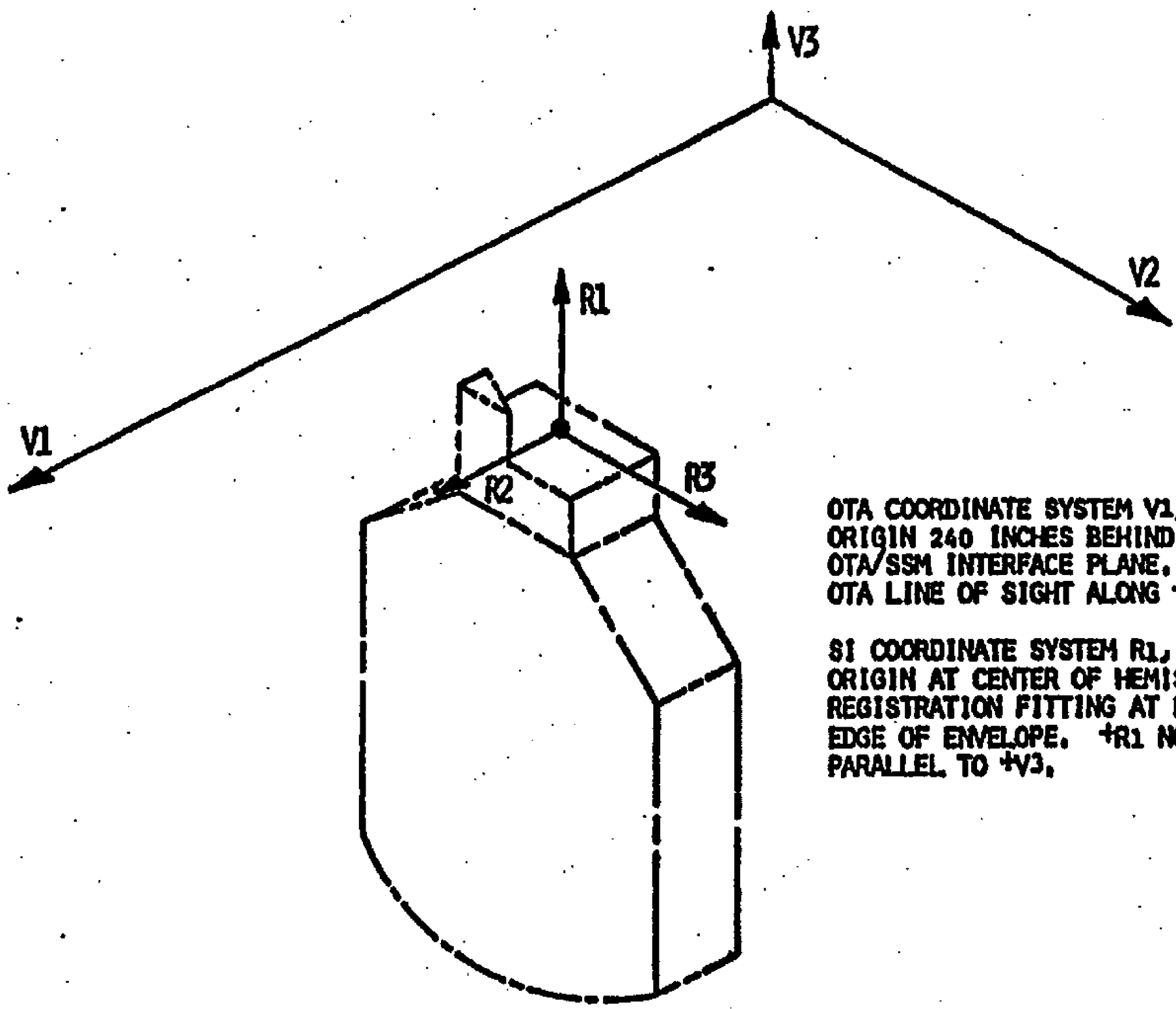

OTA COORDINATE SYSTEM V1, V2, V3, ORIGIN 240 INCHES BEHIND THE OTA/SSM INTERFACE PLANE. OTA LINE OF SIGHT ALONG +V1.

SI COORDINATE SYSTEM R1, R2, R3, ORIGIN AT CENTER OF HEMISPHERICAL REGISTRATION FITTING AT FORWARD EDGE OF ENVELOPE. +R1 NOMINALLY PARALLEL TO +V3.

Figure 3.2-1 Radial SI Coordinate System

(New page created by IRN 076)

3.3 Mechanical Interfaces. The mechanical interfaces described in this section include the SI envelope, SI mounting, guiderail/OTA changeout guides, ground handling, space support equipment, EV crewmember handholds, alignment, in-orbit removal and installation, electrical connector locations, SI accessibility, venting, pressurization, and purge interface definitions.

Unless otherwise noted, all dimensions are in inches and all tolerances are as follows:

- .XXX = ± 0.005 in
- .XX = ± 0.01 in Angles = ± 30' min
- .X = ± 0.05 in

All dimensions of figures are applied at 21°C. Unless otherwise noted, all mechanical and structural interface surfaces where intimate contact is made are free of paints or similar materials and have a surface roughness no greater than 63. UNF helicoils are compatible with UNJF bolts and are acceptable. The threaded length of a UNJF bolt is twice the diameter of the threaded bolt end.

3.3.1 SI Envelope. The radial SI (WFPC-I) fits within the envelope shown in Fig. 3.3-1 except for local intrusions as specified in Figs. 3.3-2, 3.3-2A, and 3.3-3 through 3.3-13. The dynamic envelope is shown in Figure 3.3-3. The radial orbit replacement instrument (ORI) shall fit within the envelope shown in Fig. 3.3-1A. Its dynamic envelope is shown in Fig. 3.3-3A. IRN 067, 068 071

3.3.2 Mounting Points and Constraints. The radial SI is supported and constrained by the OTA at three points (A, B, C) shown in Fig. 3.3-1, 3.3-4, and 3.3-5. Throughout the document the position of the "A" latch is given in the figures in accordance with the "as-built" location, STA 210.308. The design nominal position was STA 210.290. The details of this anomaly are given in the Metrology Book, LMSC/F373650. Shear/alignment pins are supplied by the government. Statically determinate constraint directions applicable to each of the three points are as follows: IRN 071

Point	DIRECTION		
A	± V1	± V2	± V3
B	± V1		
C	± V1	± V2	

LMSC RELEASED CONTROLLED

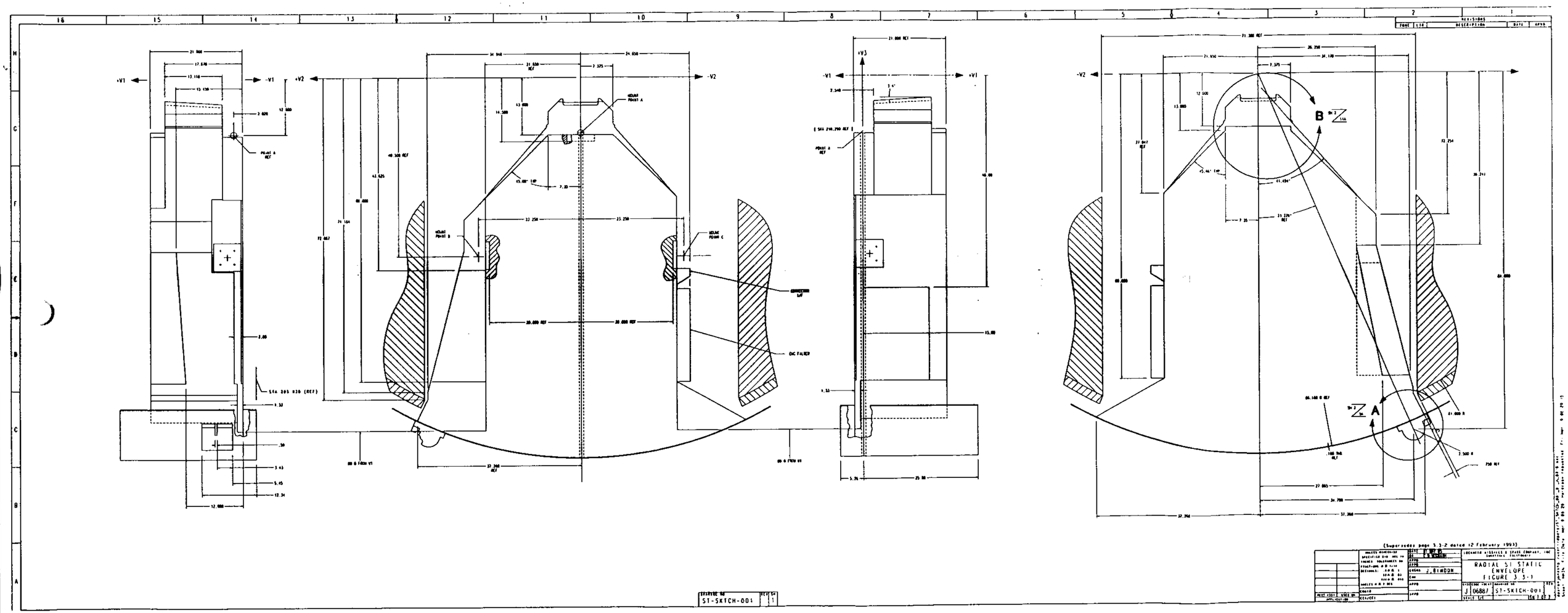
(Supersedes page 3.3-2 dated 12 February 1993)
RADIAL SI STATIC ENVELOPE
FIGURE 3.3-1
J 0686J
ST-SKTCH-001
J. BIMDON
ST-SKTCH-001

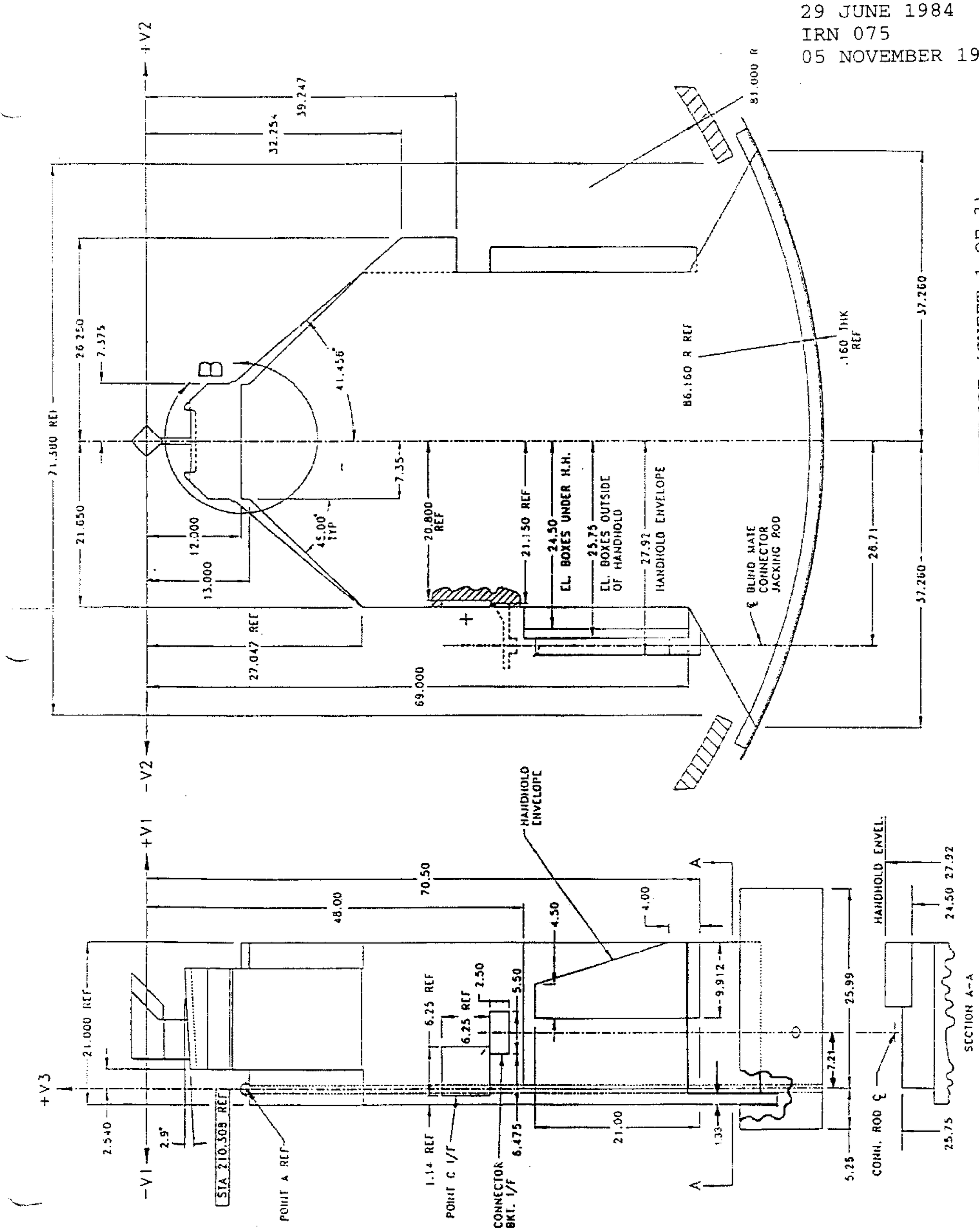

FIGURE 3.3-1A RADIAL ORI STATIC ENVELOPE (SHEET 1 OF 3)

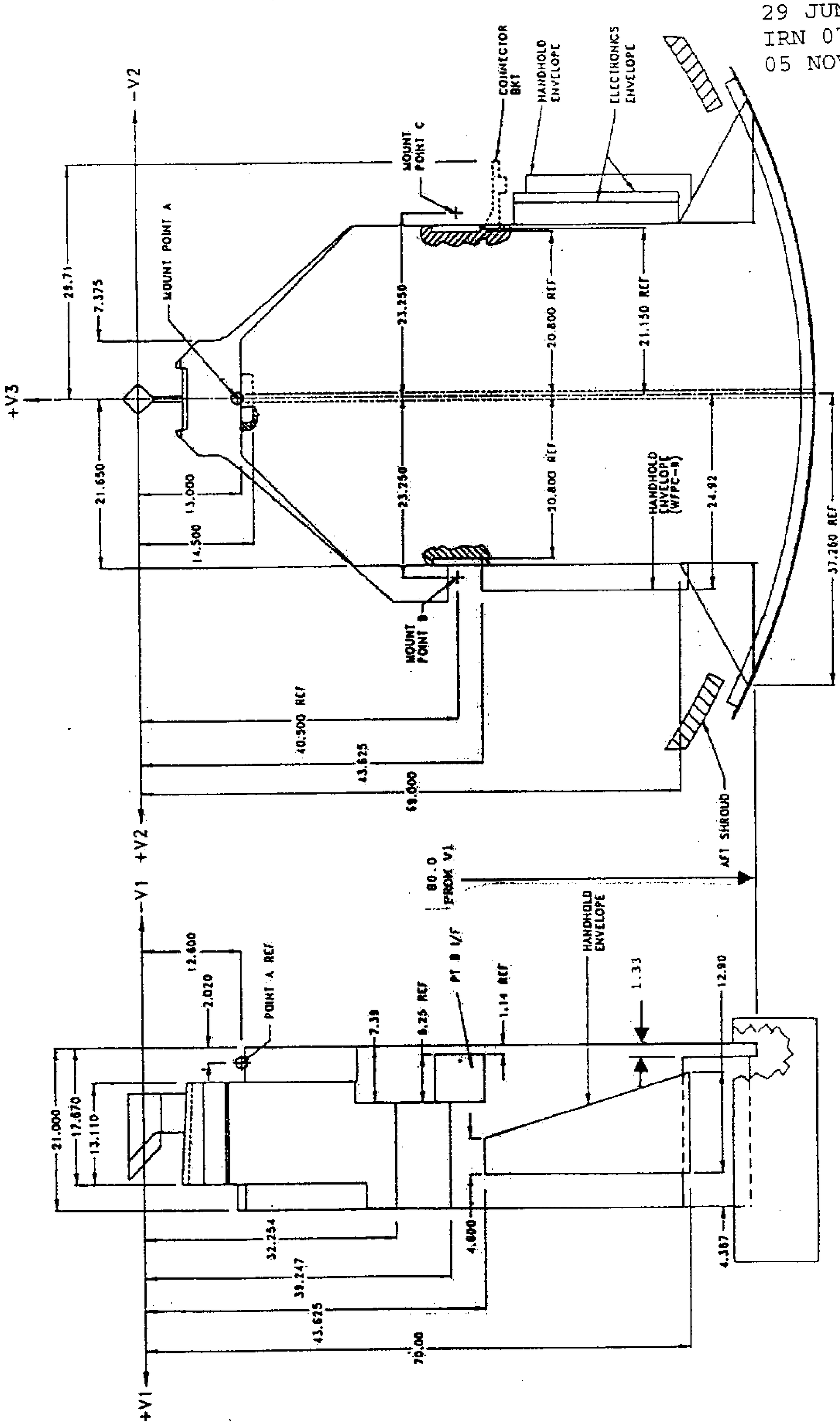

FIGURE 3.3-1A RADIAL ORI STATIC ENVELOPE (SHEET 2 OF 3)

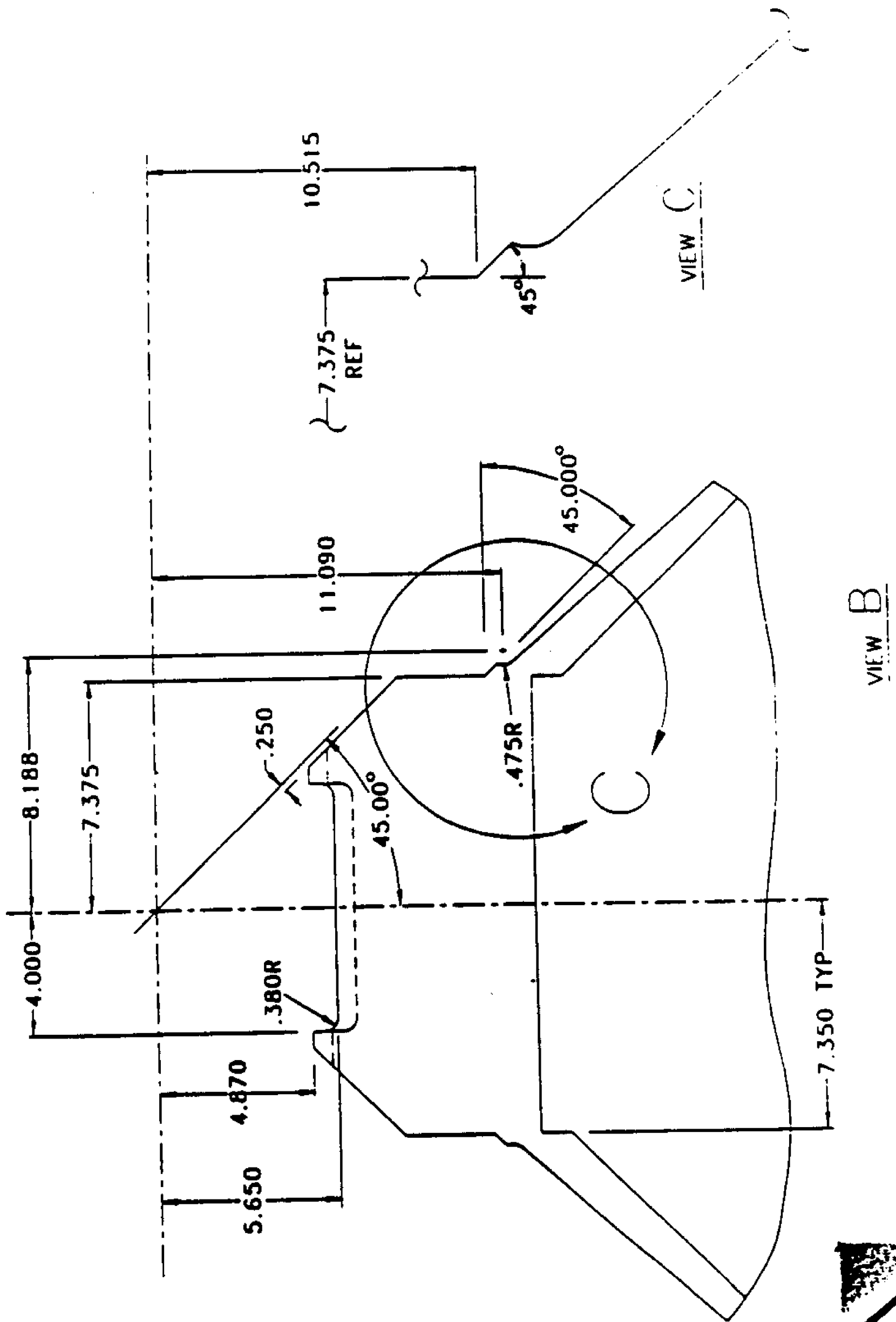

FIGURE 3.3-1A RADIAL ORI STATIC ENVELOPE (SHEET 3 OF 3)

LMSC RELEASED CONTROLLED

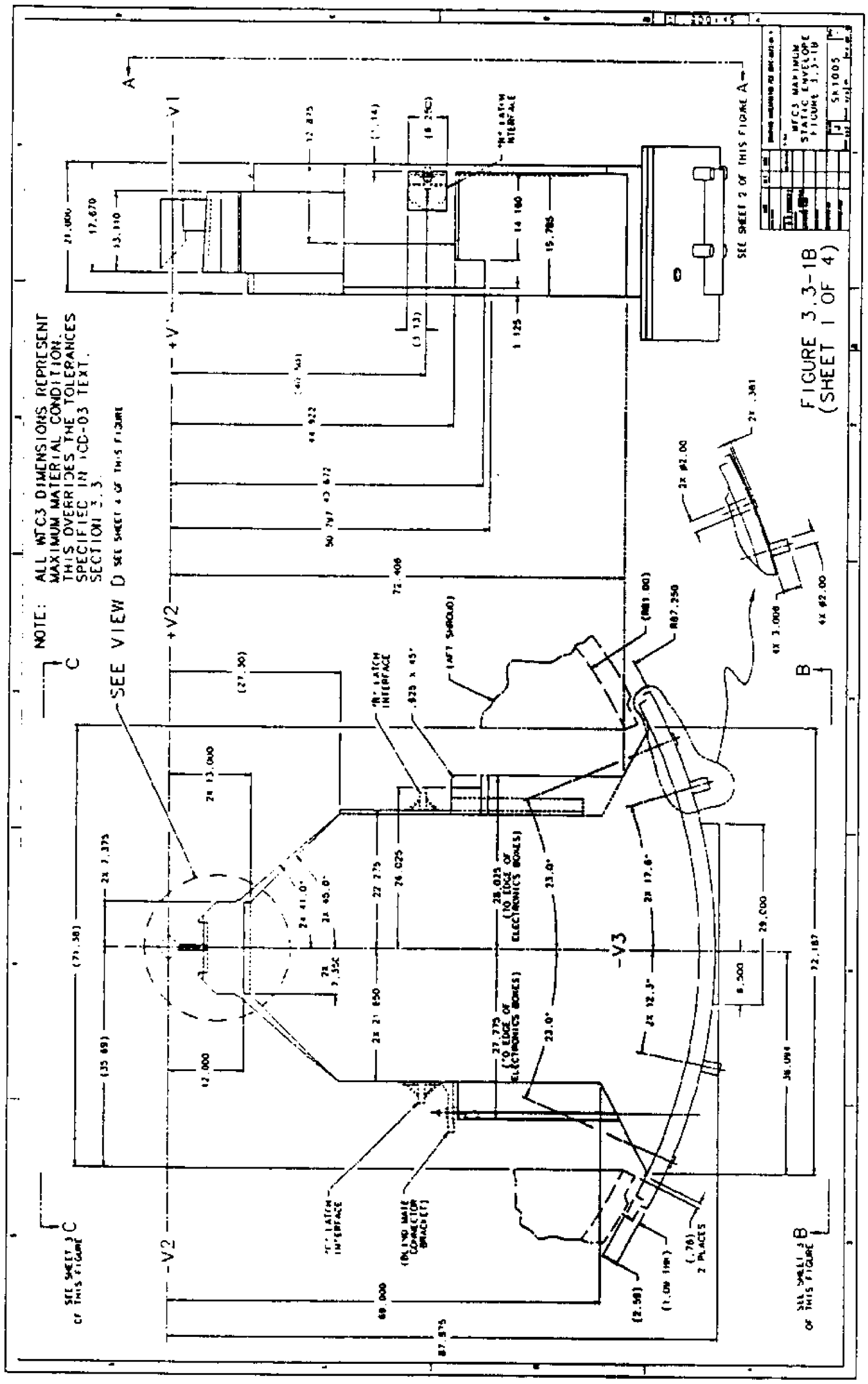

Figure 3.3-1B WFC3 Maximum Static Envelope (Sheet 1 of 4)

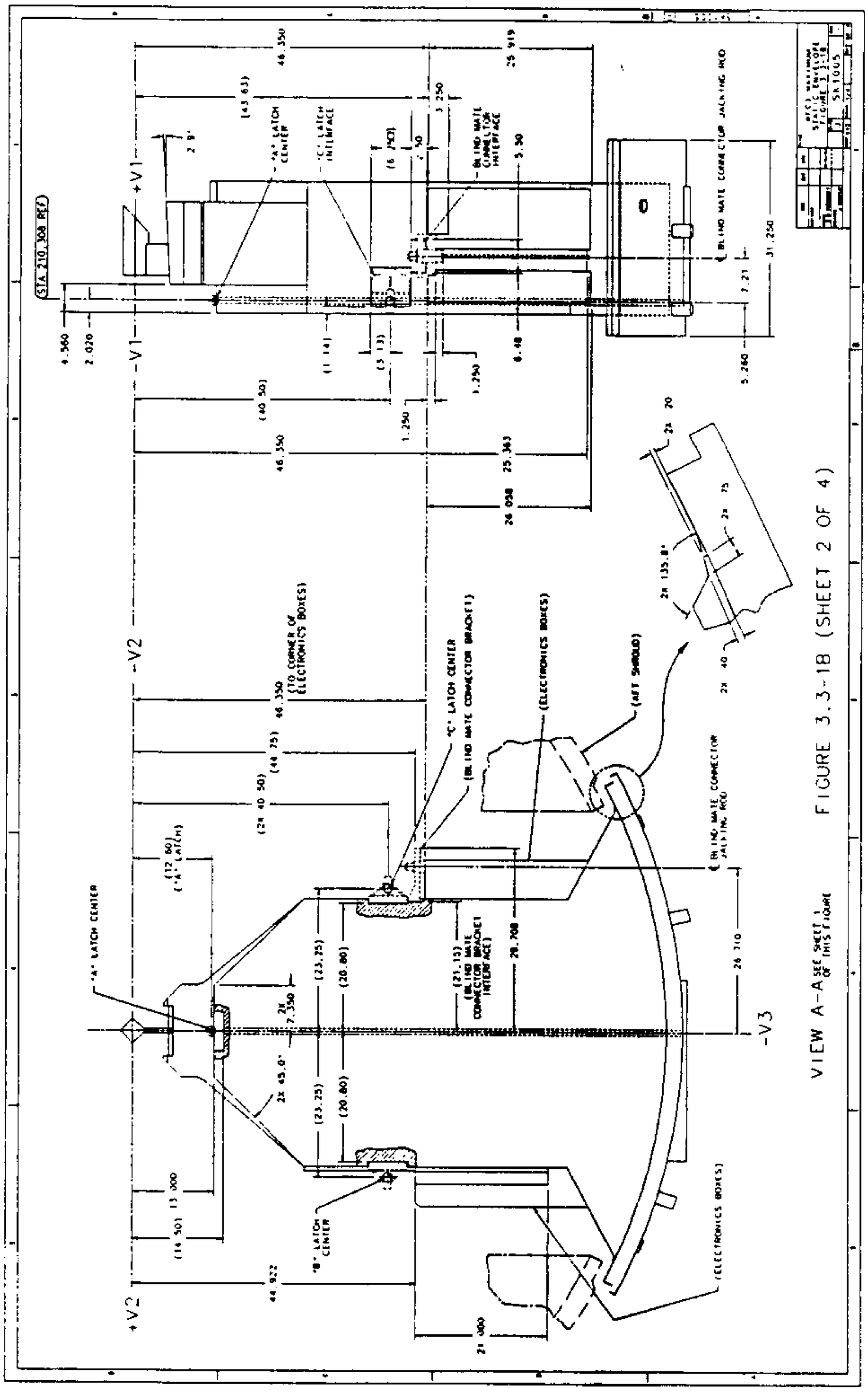

FIGURE 3.3-1B (SHEET 2 OF 4)

Figure 3.3-1B WFC3 Maximum Static Envelope (Sheet 2 of 4)

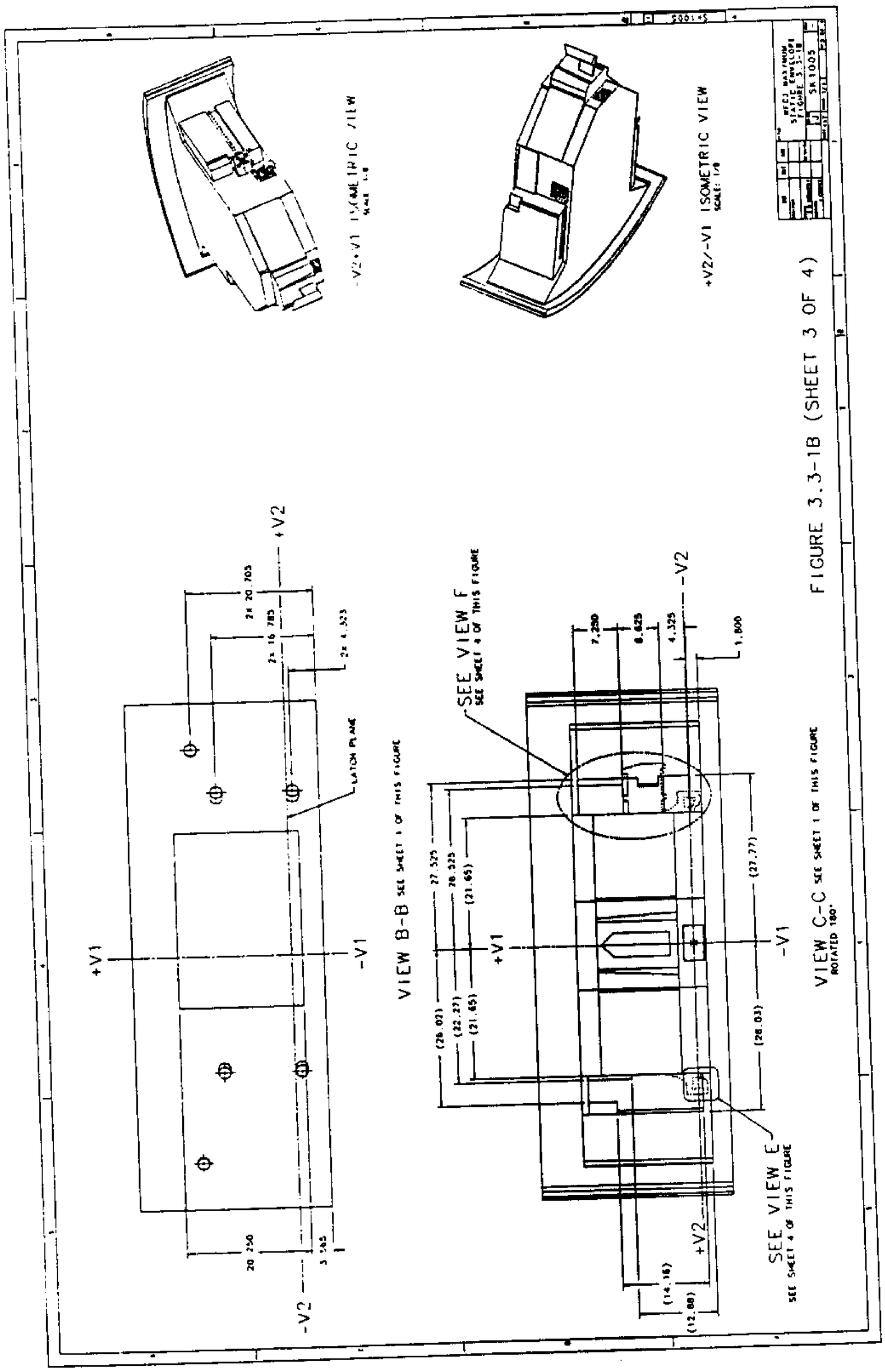

Figure 3.3-1B WFC3 Maximum Static Envelope (Sheet 3 of 4)

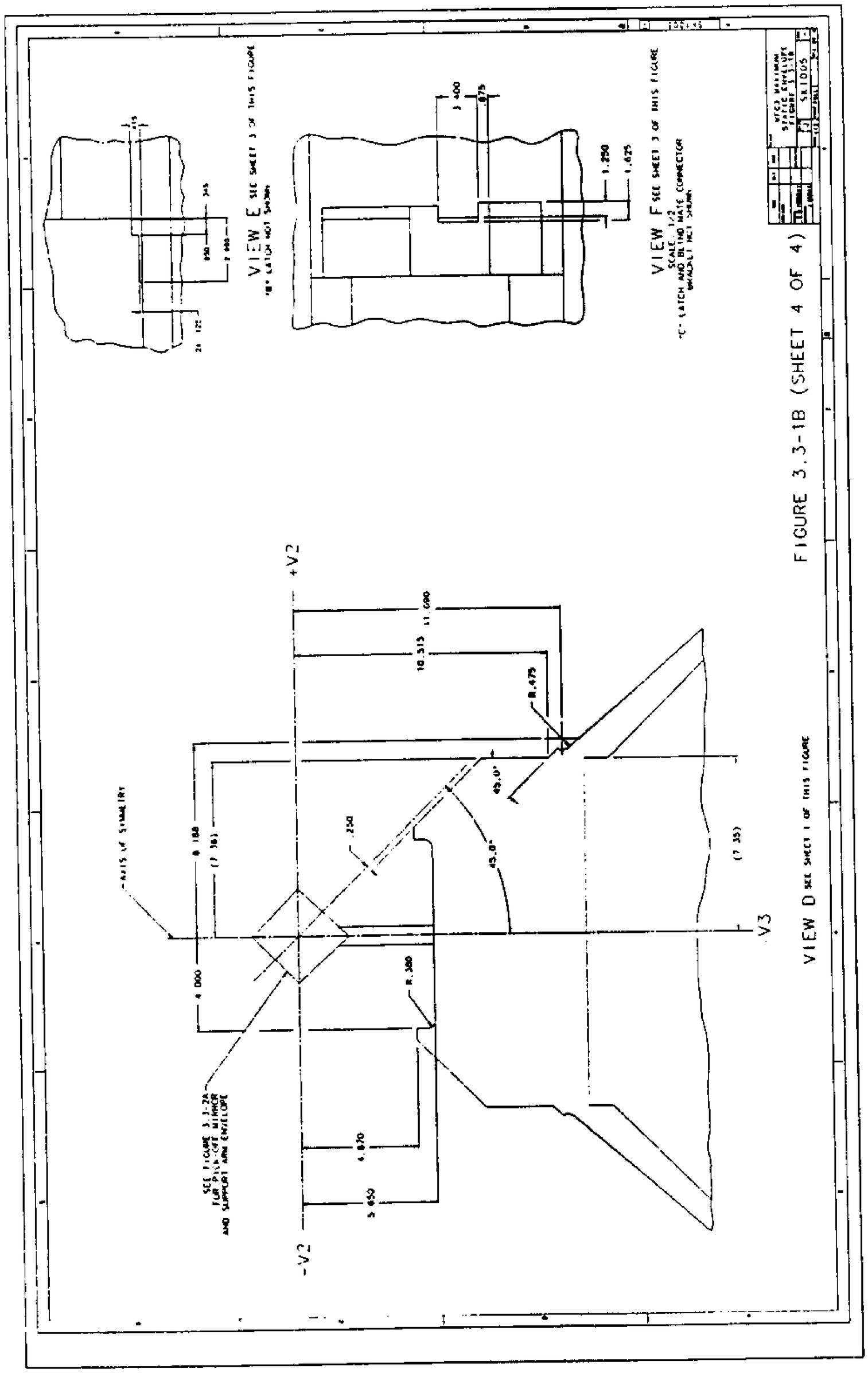

Figure 3.3-1B WFC3 Maximum Static Envelope (Sheet 4 of 4)

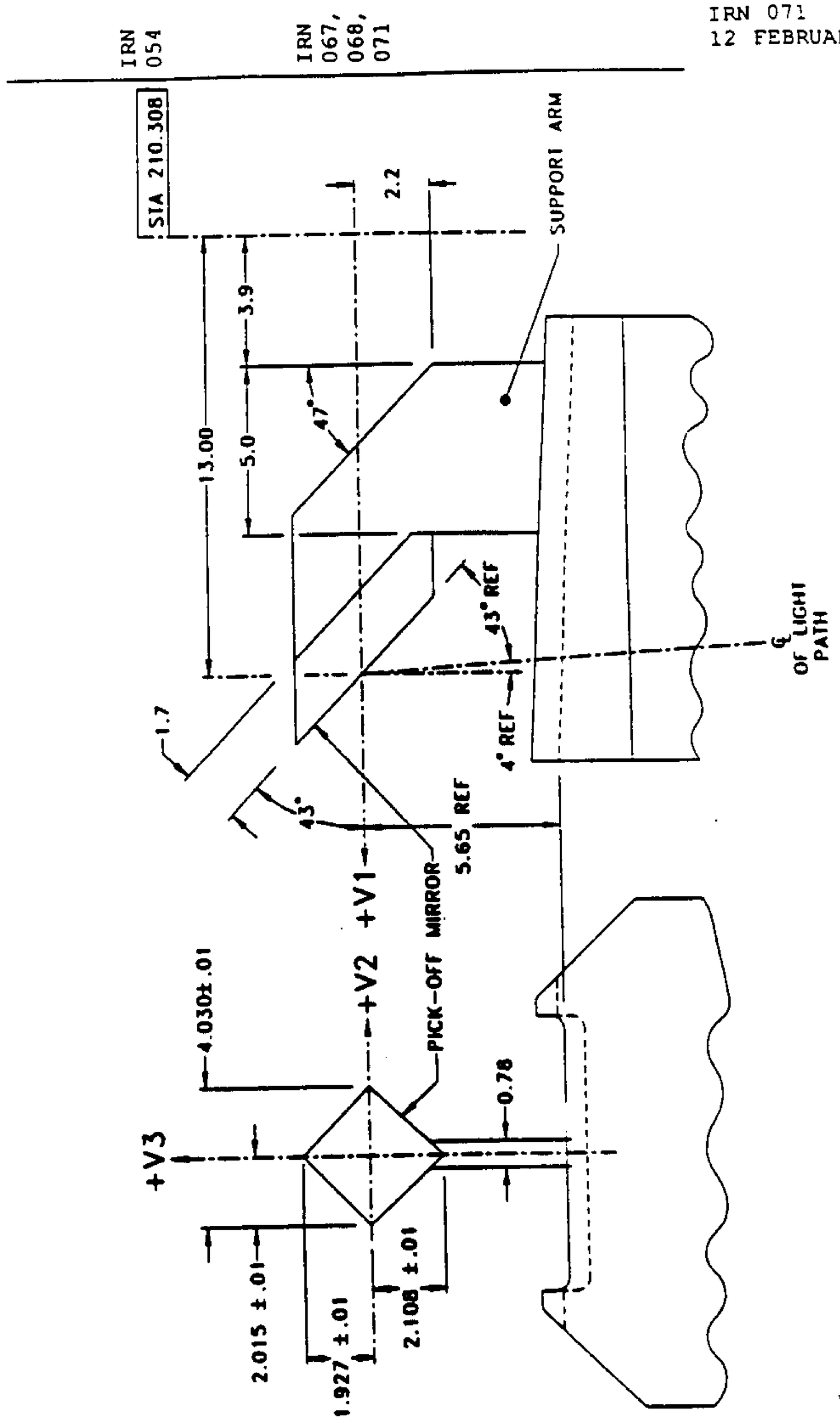

FIGURE 3.3-2 WFPC-I PICKOFF MIRROR AND SUPPORT ARM IRN 067, 068

LMSC RELEASED CONTROLLED

IRN 067, 068, 071

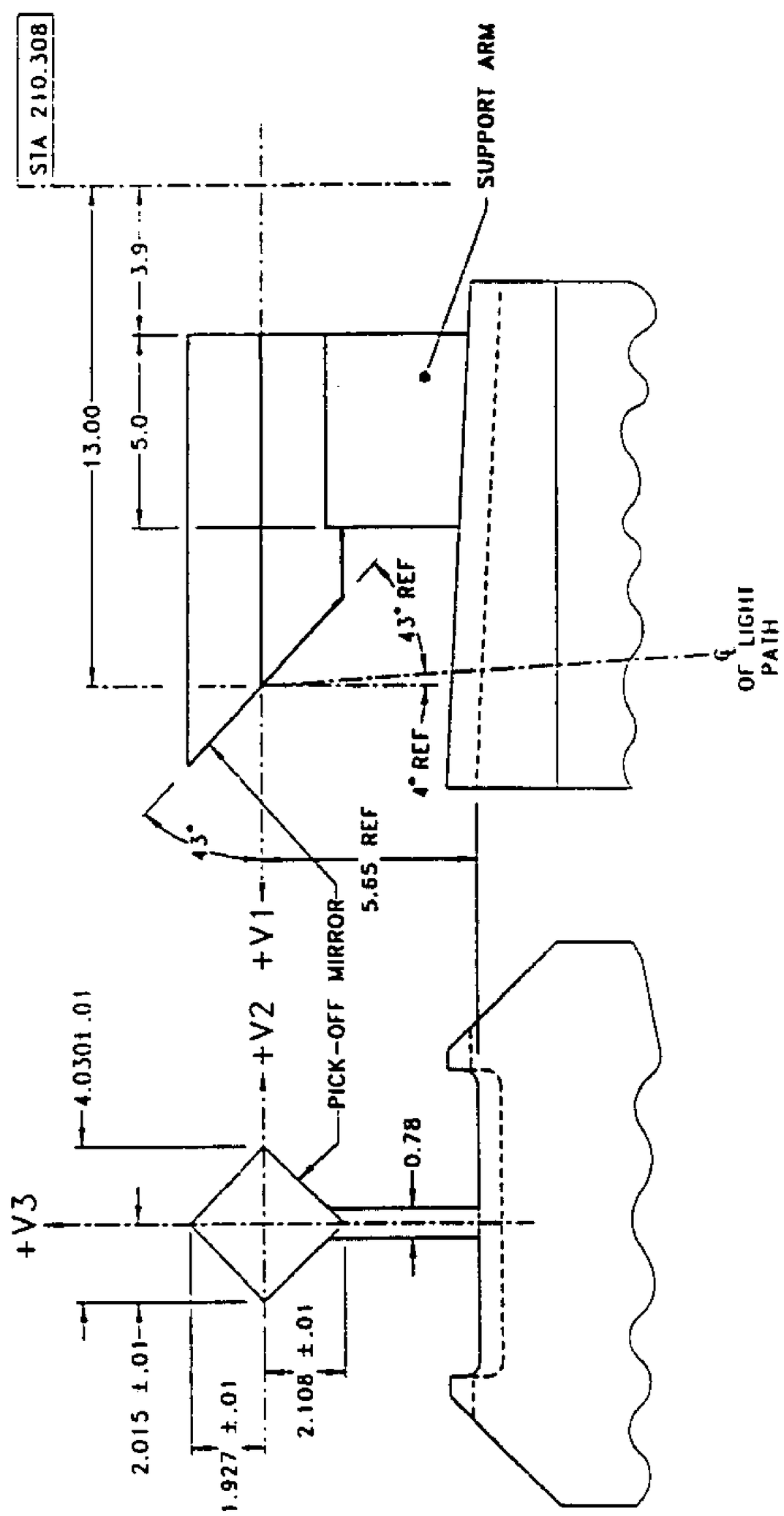

IRN 067, 068, 077

Figure 3.3-2A WFPC-II AND WFC3 PICK-OFF MIRROR AND SUPPORT ARM ENVELOPE

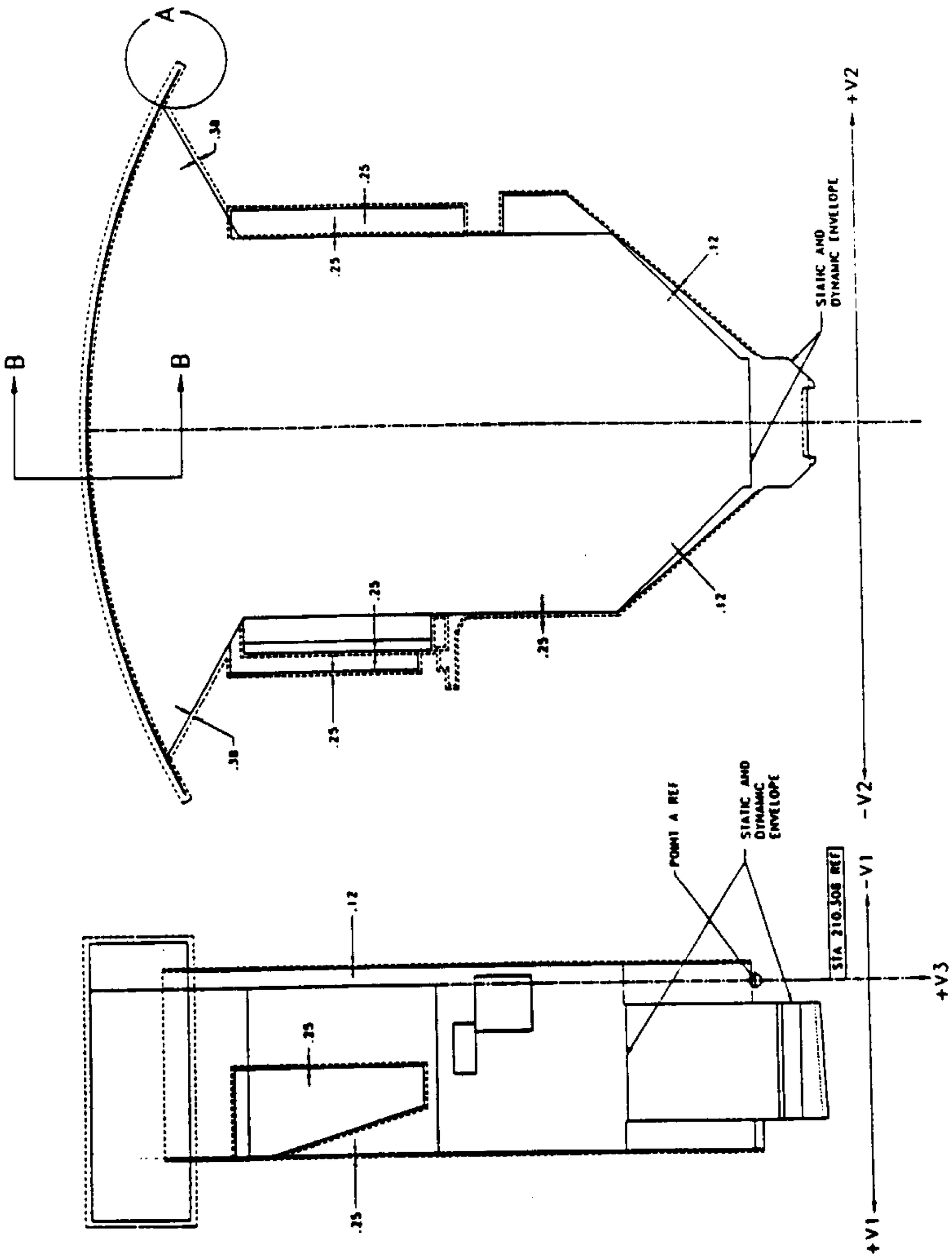

FIGURE 3.3-3A RADIAL ORI DYNAMIC ENVELOPE (SHEET 1 OF 3)

LMSC RELEASE CONTROLLED

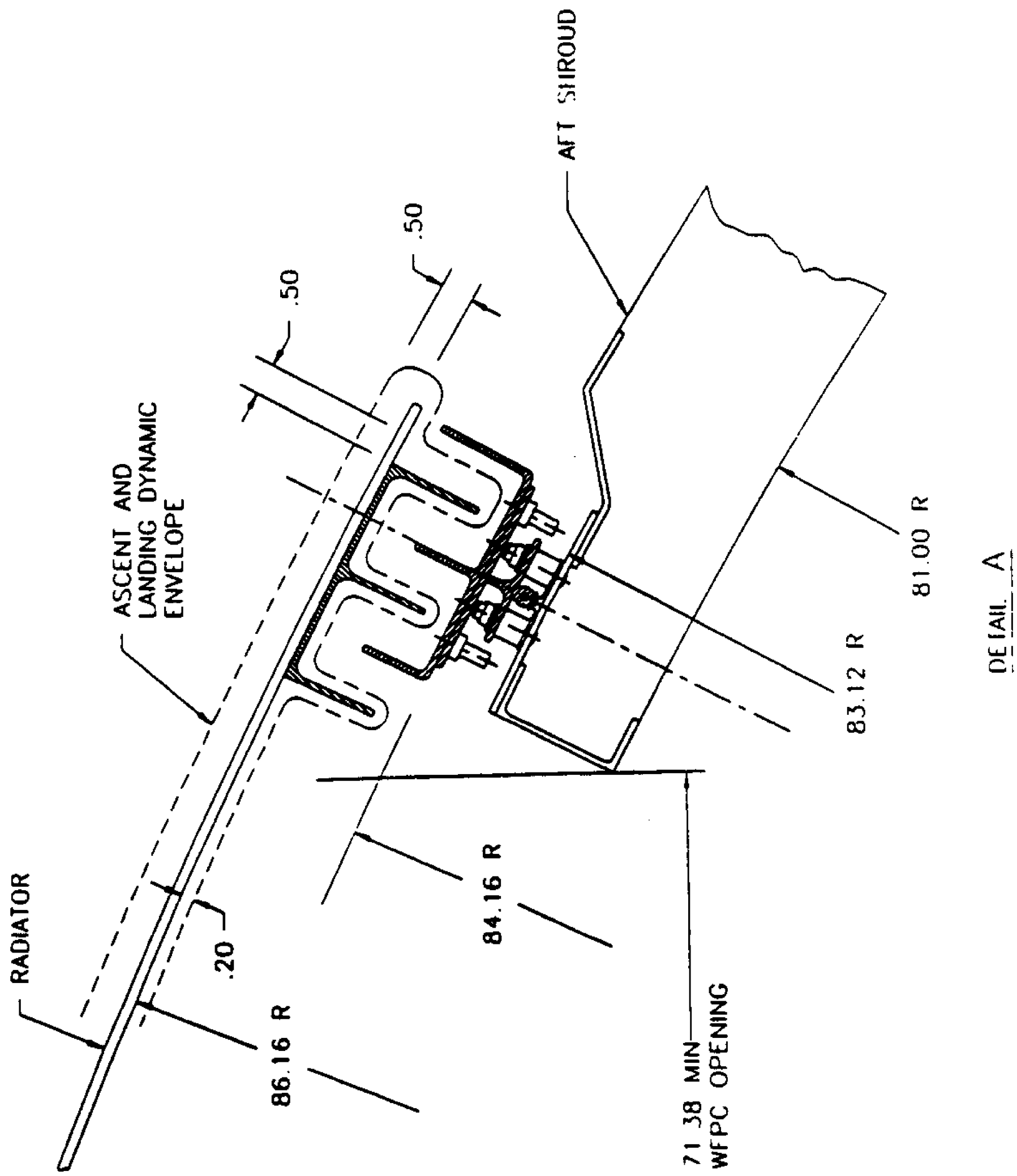

DETAIL A

FIGURE 3.3-3A RADIAL ORI DYNAMIC ENVELOPE (SHEET 2 OF 3)

LMSC
RELEASED
CONTROLLED

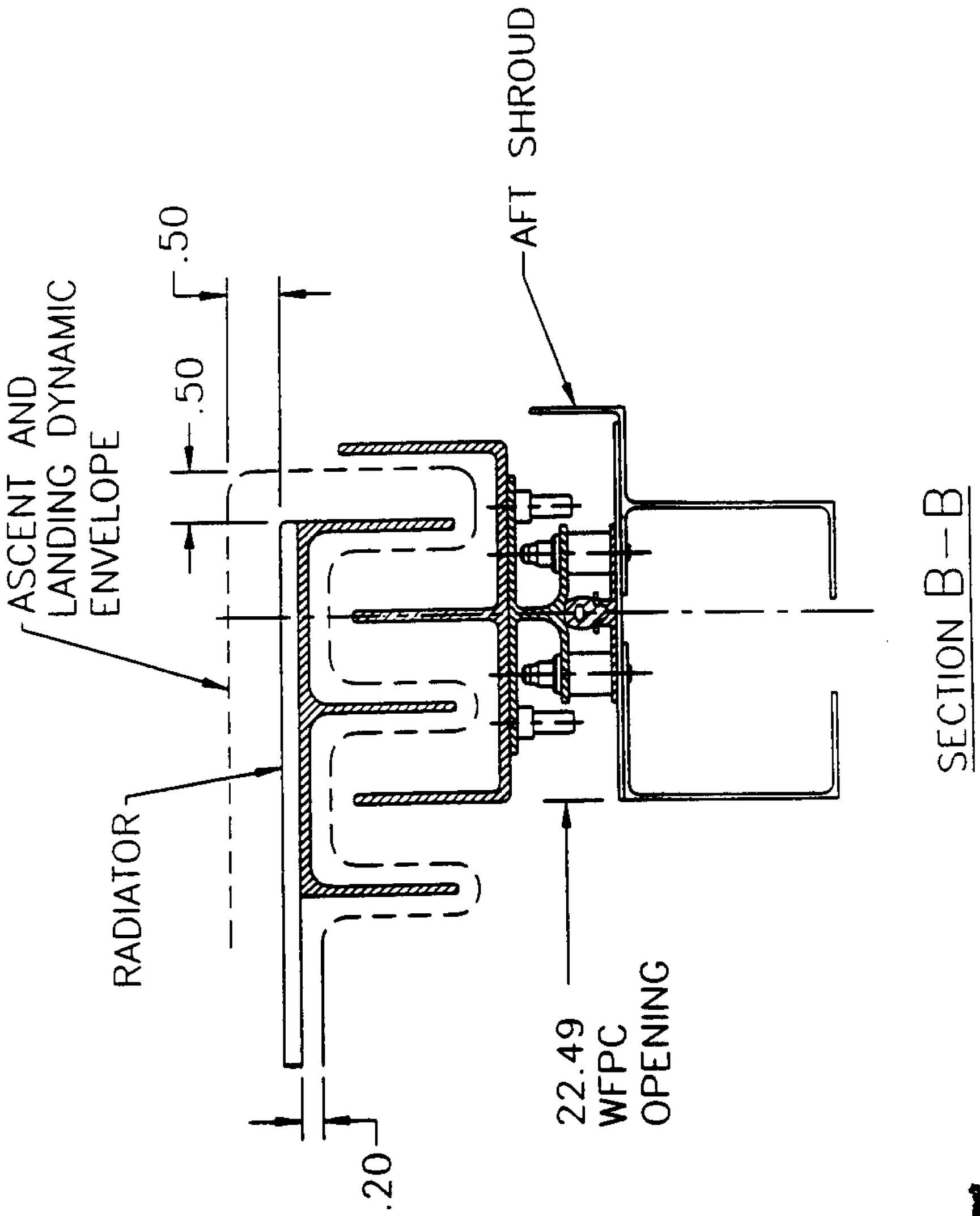

FIGURE 3.3-4A RADIAL ORI DYNAMIC ENVELOPE (SHEET 3 OF 3)

LMSC
RELEASED
CONTROLLED

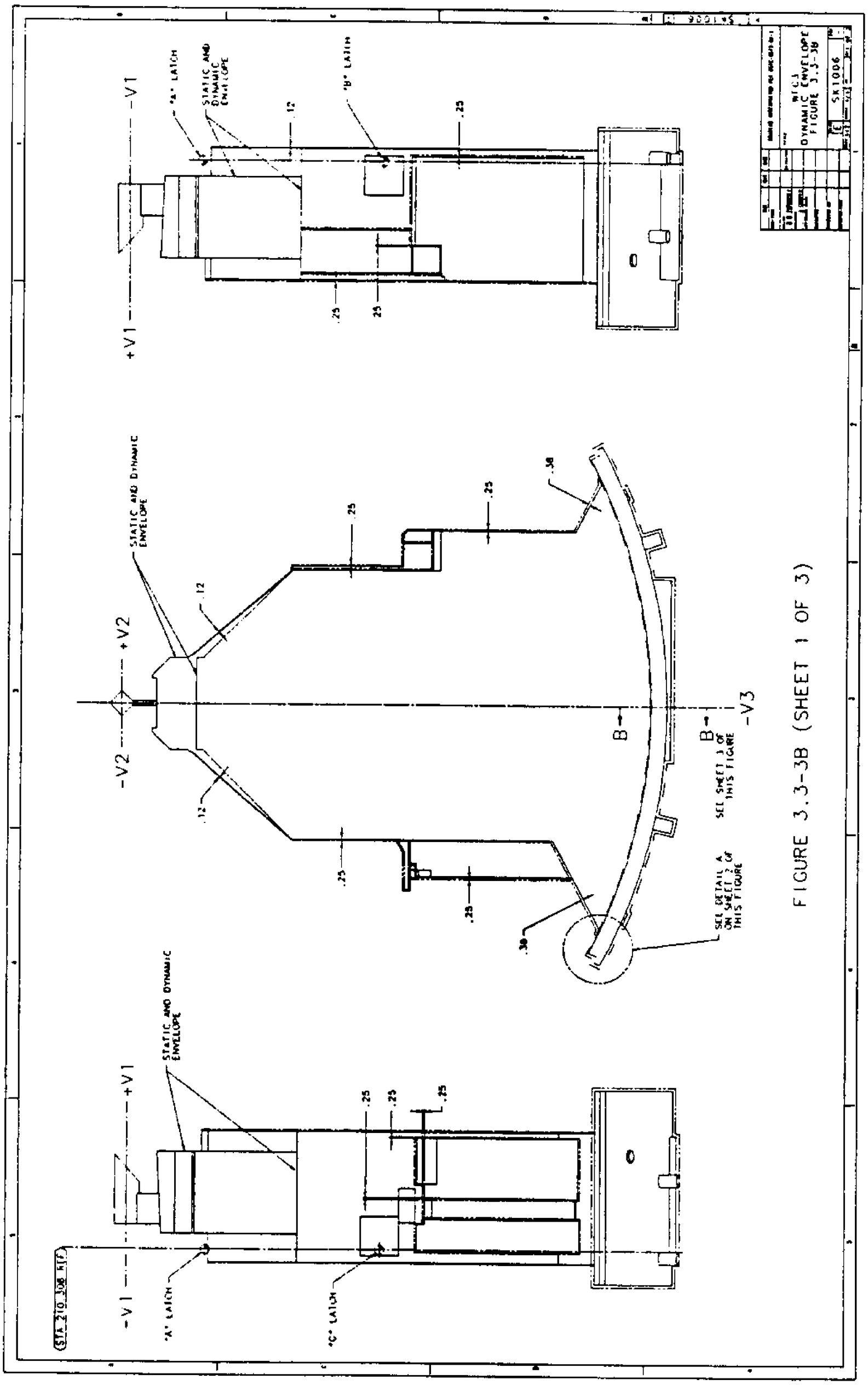

FIGURE 3.3-3B (SHEET 1 OF 3)

Figure 3.3-3B WFC3 Dynamic Envelope (Sheet 1 of 3)

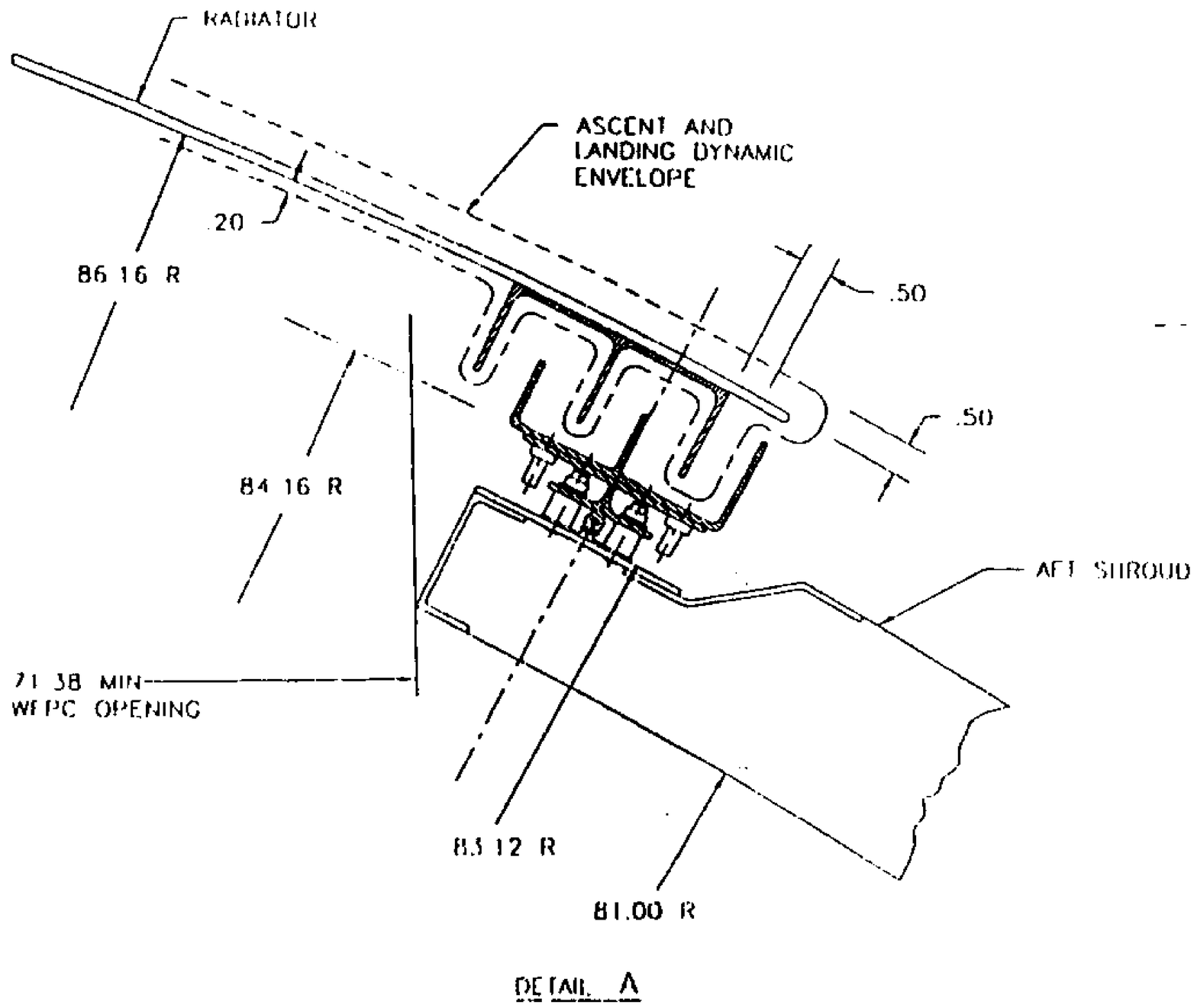

Figure 3.3-3B WFC3 Dynamic Envelope (Sheet 2 of 3)

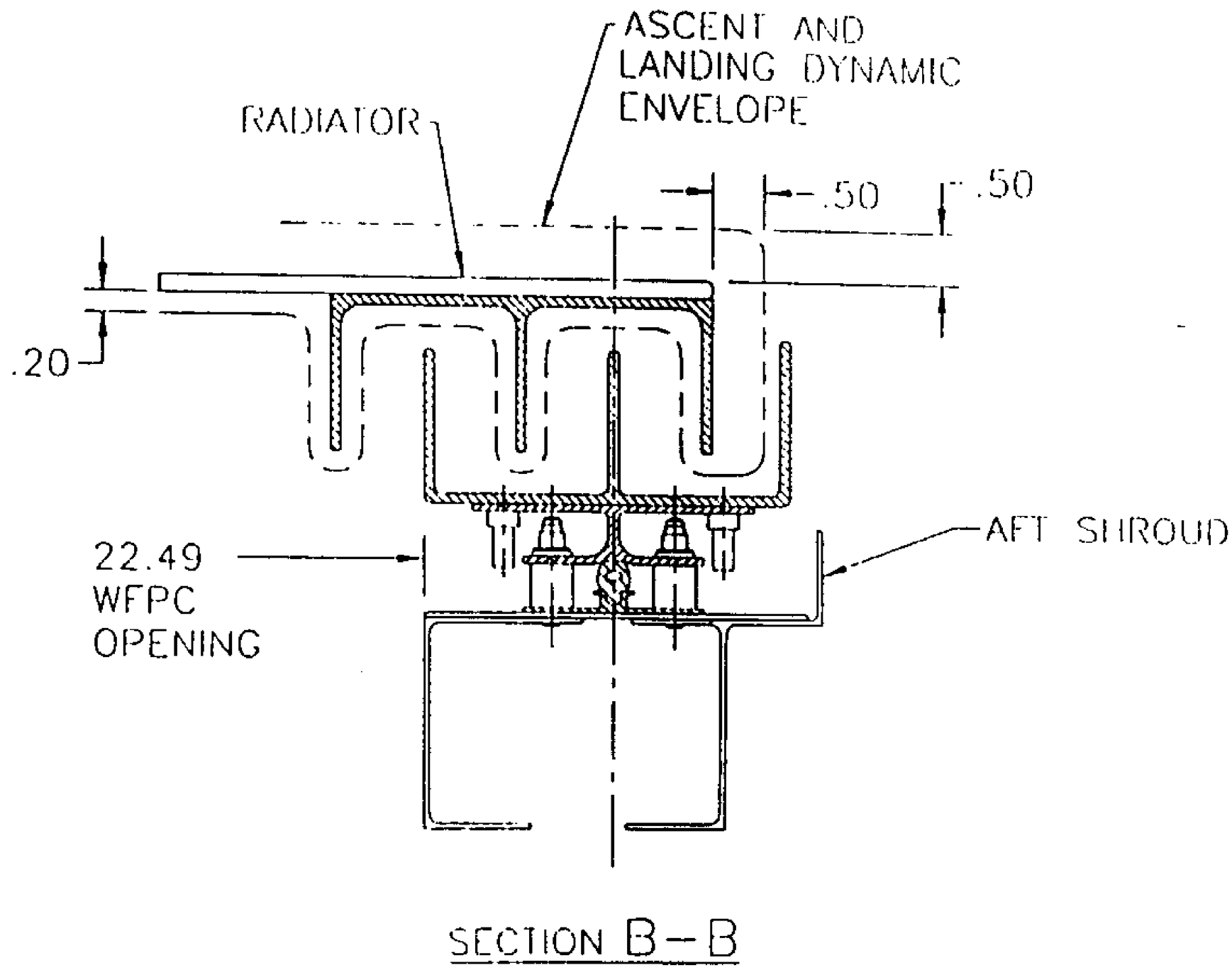

Figure 3.3-3B WFC3 Dynamic Envelope (Sheet 3 of 3)

IRN 071

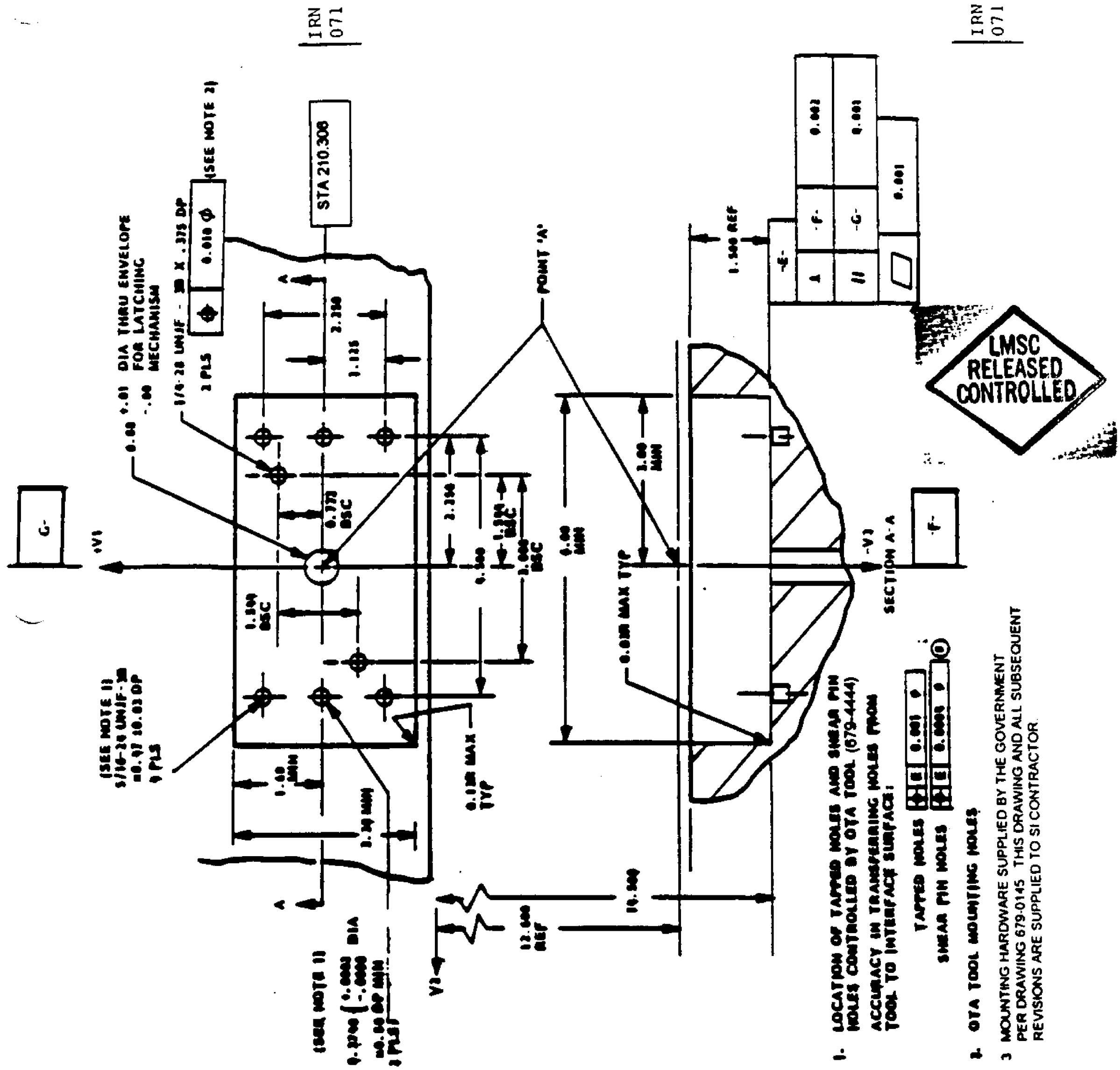

Figure 3.3-4 Mount 'A' Interface

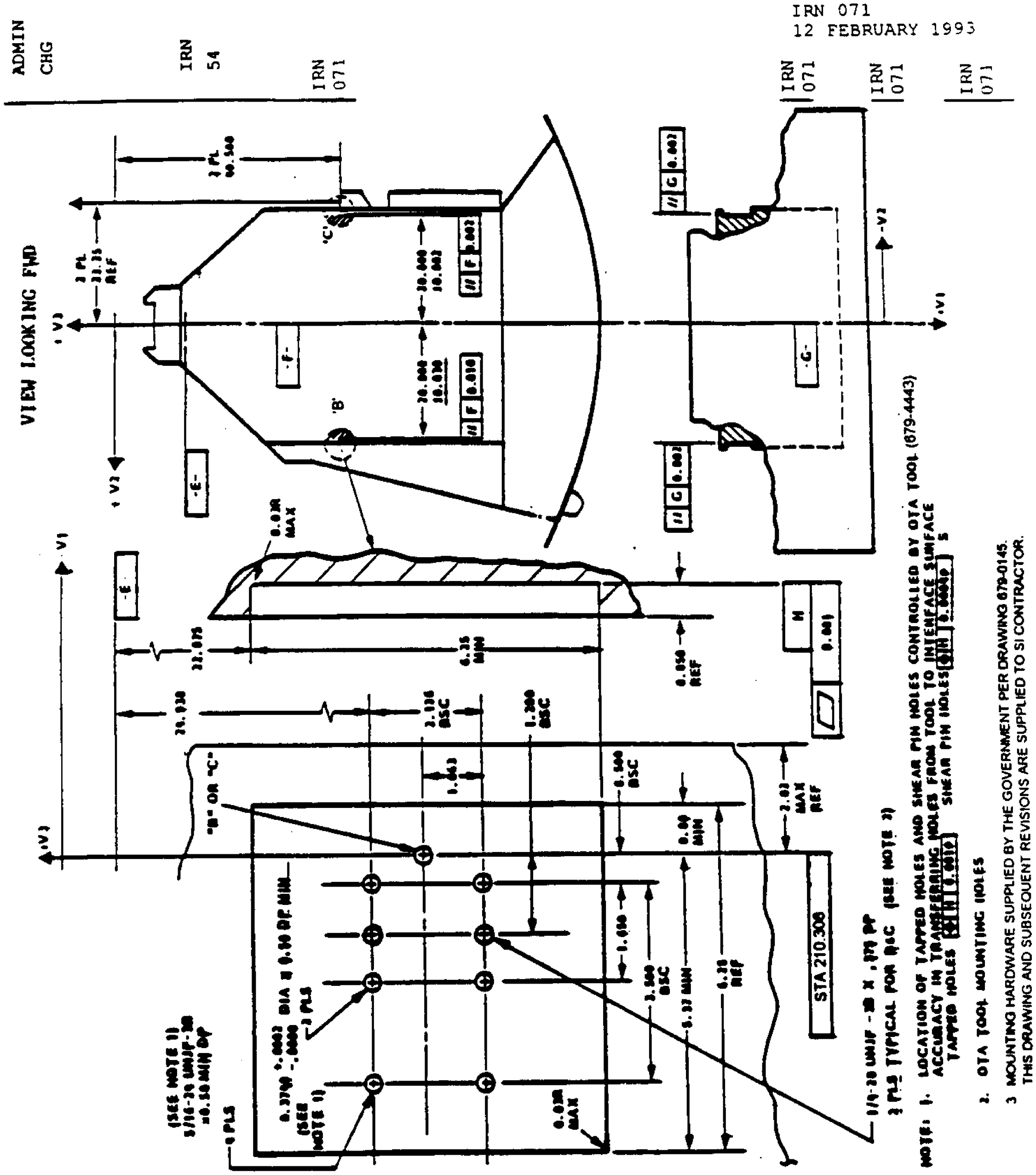

Figure 3.3-5 Radial SI Mount Points B & C Interface

(Supersedes page 3.3-6 dated 17 March 1986)

LMSC RELEASED CONTROLLED

3.3.2.1 Mount Point Fitting Interfaces. The OTA/SI mount point fitting "A" is a ball-in-socket fitting whose interface is shown in Figure 3.3-4.

The radial restraint points "B" and "C" are fittings whose interfaces are shown in Fig. 3.3-5. The SI half of fittings (including bolts for A, B and C) are supplied by the government and installed by the SI Contractor(s). IRN 071

3.3.2.2 Latching Mechanism Interface. Latching mechanism interface details are shown in Fig. 3.3-6. The cylindrical/conical lead-in is supported and supplied by the SI contractor. Bolts, nuts and washers are supplied by the government. IRN 071

3.3.3 SSM - SI Radiator Light Baffle. Figures 3.3-7 and 3.3-8 define the Radial SI light baffle to SSM interface. The baffle on the radiator is supplied by the government and installed by the SI contractor. IRN 071

3.3.4 Guiderail Interface. Guiderails to facilitate on-orbit removal and replacement of the SI are attached to the SI as shown in Figures 3.3-9, 3.3-9a and 3.3-9b. Figure 3.3-9a shows the guiderails installed on WFPC-I. Figure 3.3-9b shows the guiderails installed on the radial ORI, WFPC-II. The guiderails are supplied by the government and installed by the SI contractor. IRN 071

3.3.5 Ground Support Equipment Interfaces.

3.3.5.1 WFPC-I Ground Handling Interface. The SI is installed or removed during ground operations while the OTA/SSM is in the vertical position (+V1 pointing up). OTA and SSM provide adequate clear access to allow SI installation or removal without degradation or damage of flight hardware. IRN 064, 071

The OTA GSE interfaces with the SI at the GSE interface points shown in Fig. 3.3-10. The 1g static deflection of the SI structure, with +V1 upward, when lifted by the GSE hardpoints does not exceed .06 inches measured with respect to the GSE hardpoints.

LMSC RELEASED CONTROLLED

The SI GSE interface supports the full SI weight in a statically determinate manner, in any attitude prior to installation into ST. The -V3 surface containing the GSE attachment points is readily accessible and unobstructed when the SI is presented to the GSE.

3.3.5.2 WFPC-II & All Radial ORIs, Ground Handling Interface. The SI shall be capable of being installed into or removed from the SIPE during ground operations while the SI is in either the vertical position (-V3 end up) or the horizontal position (+V1 up). Handling hardware and procedures shall limit rotation loading and provide the proper alignment to protect the latch interfaces. The SIPE provides adequate clear access to allow SI installation or removal without degradation or damage of flight hardware.

The standard installation GSE interfaces with the SI at the GSE interface points shown in Figure 3.3.10. Additional GSE points may be provided by the SI contractor if desired, for lifting in the +V1 up position in a non-cantilever mode. IRN 071

The static deflection of the SI structure with the +V1 upward, when lifted in a cantilever mode by the GSE hardpoints, shall not exceed 0.06 inches measured with respect to the GSE hardpoints.

The SI GSE interface supports the full SI weight in a statically determinate manner, in any attitude prior to installation. The -V3 surface containing the GSE attachment points is readily accessible and unobstructed when the SI is presented to the GSE.

3.3.5.3 Ground Operations Mirror Protective Cover. The WFPC-I GSE Mirror Protective Cover and interface points are shown in Figure 3.3-14. The Radial ORI GSE cover is shown in Figure 3.3-14a. These covers are supplied by the government, and are installed during ground operations to protect the pick-off mirror. The GSE cover is removed prior to installation into the SIPE for flight and the flight cover is installed immediately. IRN 071, 076

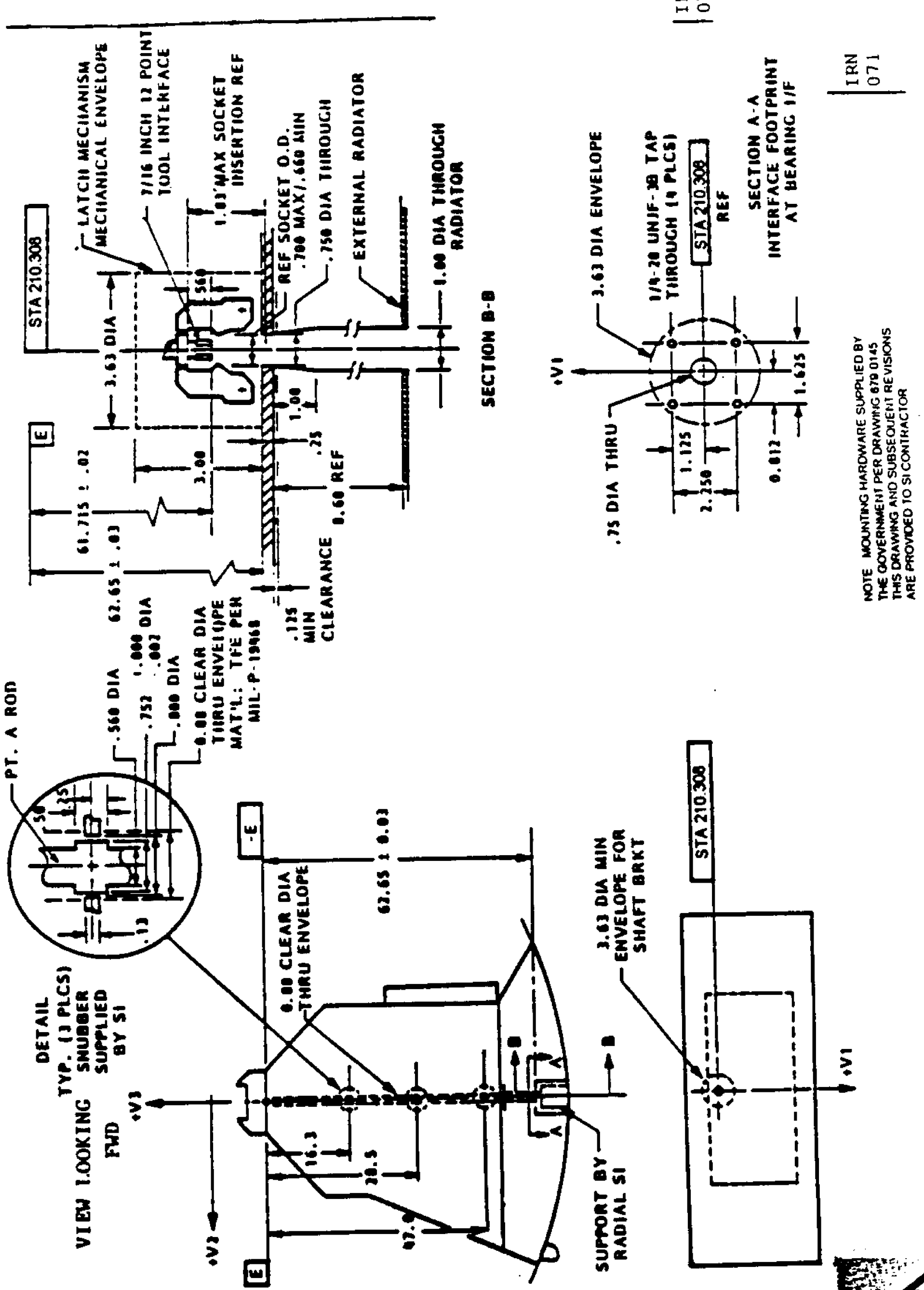

Figure 3.3-6 Latching Mechanism Interface

(Supersedes page 3.3-8 dated 17 March 1986)

LMSC RELEASED CONTROLLED

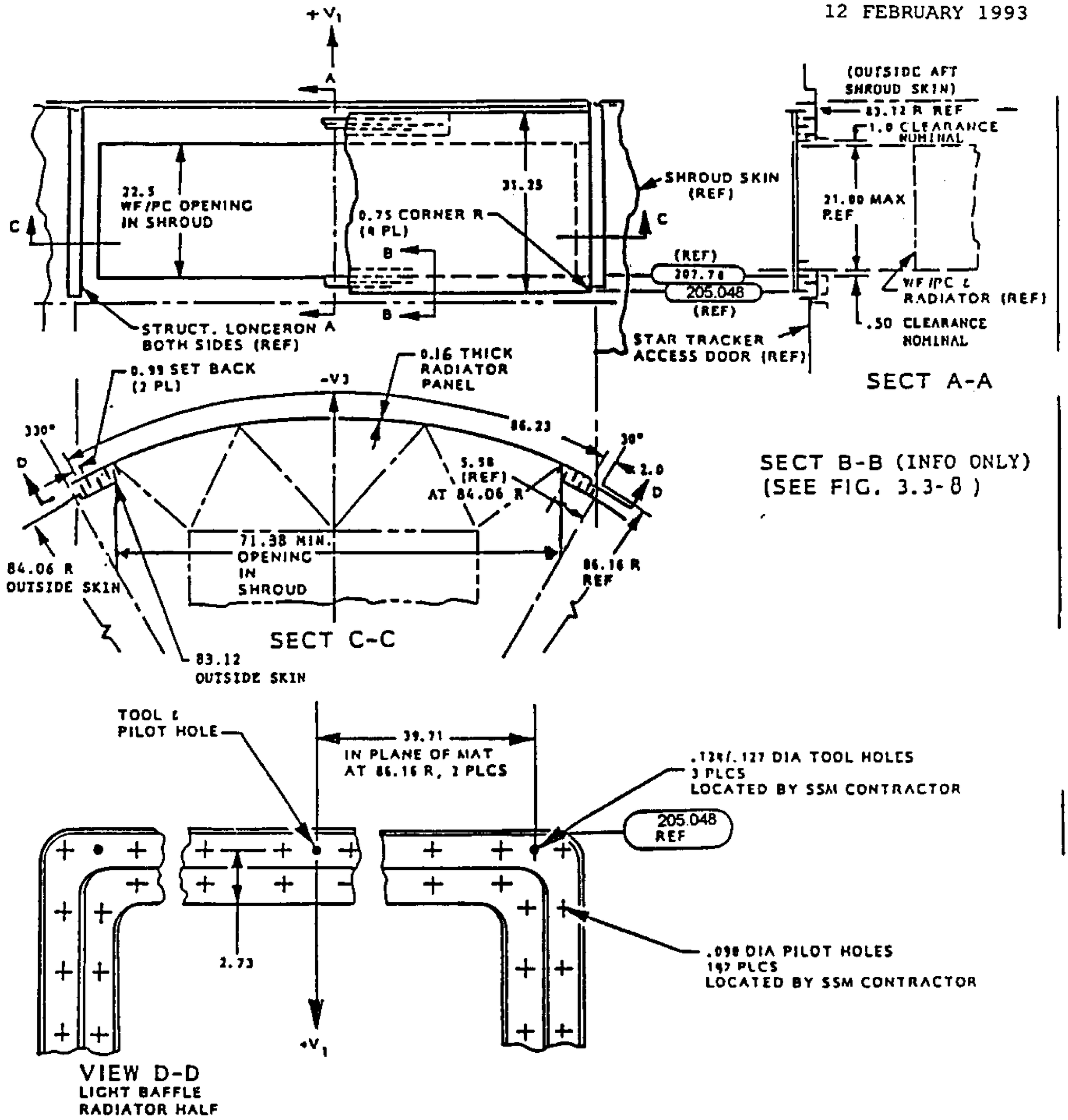

IRN 044, 061, 071

ADMIN CHG

IRN 061, 071

IRN 071

Figure 3.3-7 Light Baffle Geometry Radial SI External Radiator to SSM Interface

LMSC RELEASED CONTROLLED

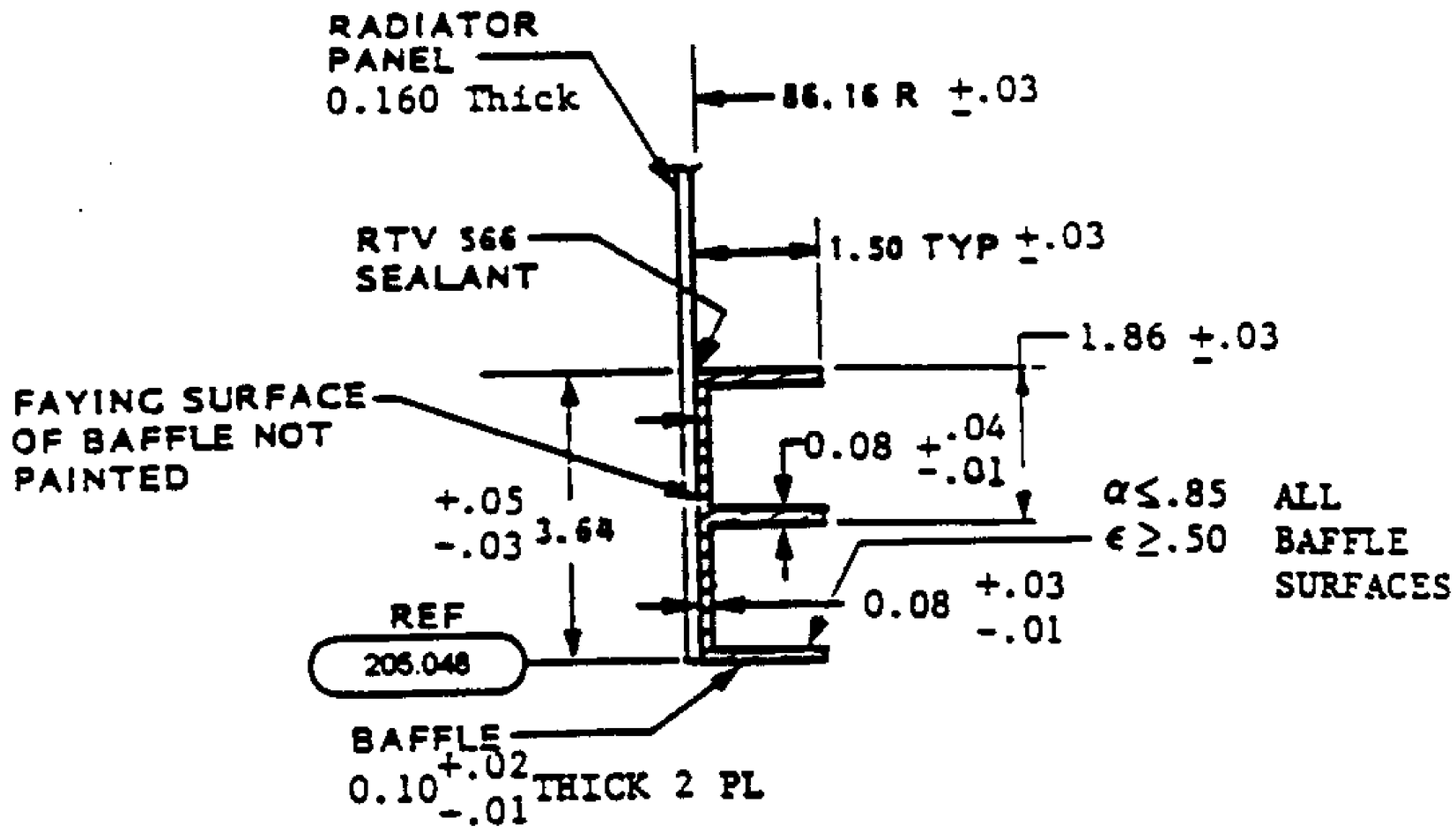

IRN 054

IRN 071

SECT B-B – REFERENCE FIGURE 3.3-7
RADIATOR AND LIGHT BAFFLES

IRN 071

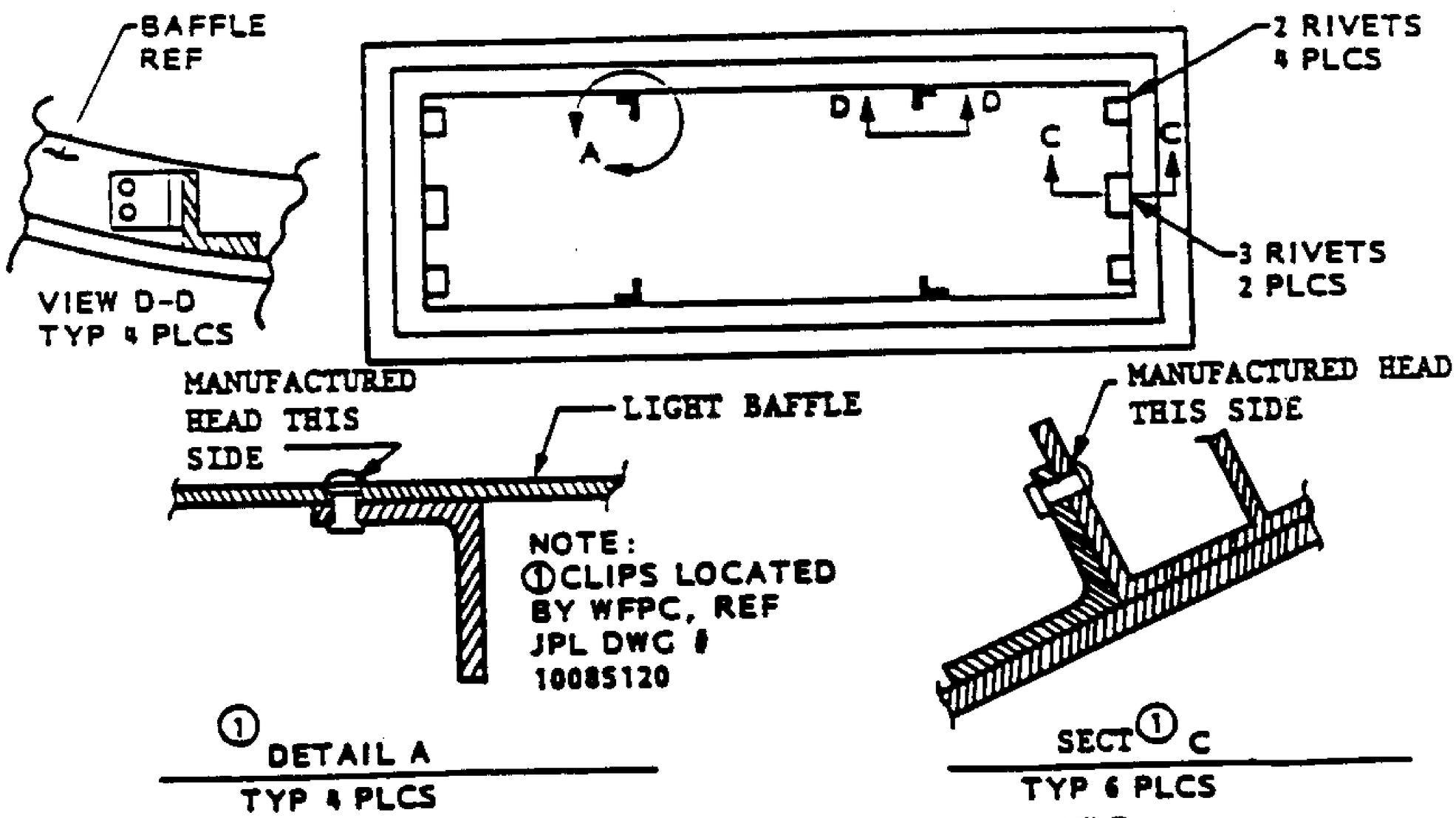

IRN 044

WFPC ATTACHMENT CLIPS ON LIGHT BAFFLE

Figure 3.3-8 Radiator and Light Baffle

LMSC RELEASED CONTROLLED

(Supersedes page 3.3-10 dated 17 March 1986)

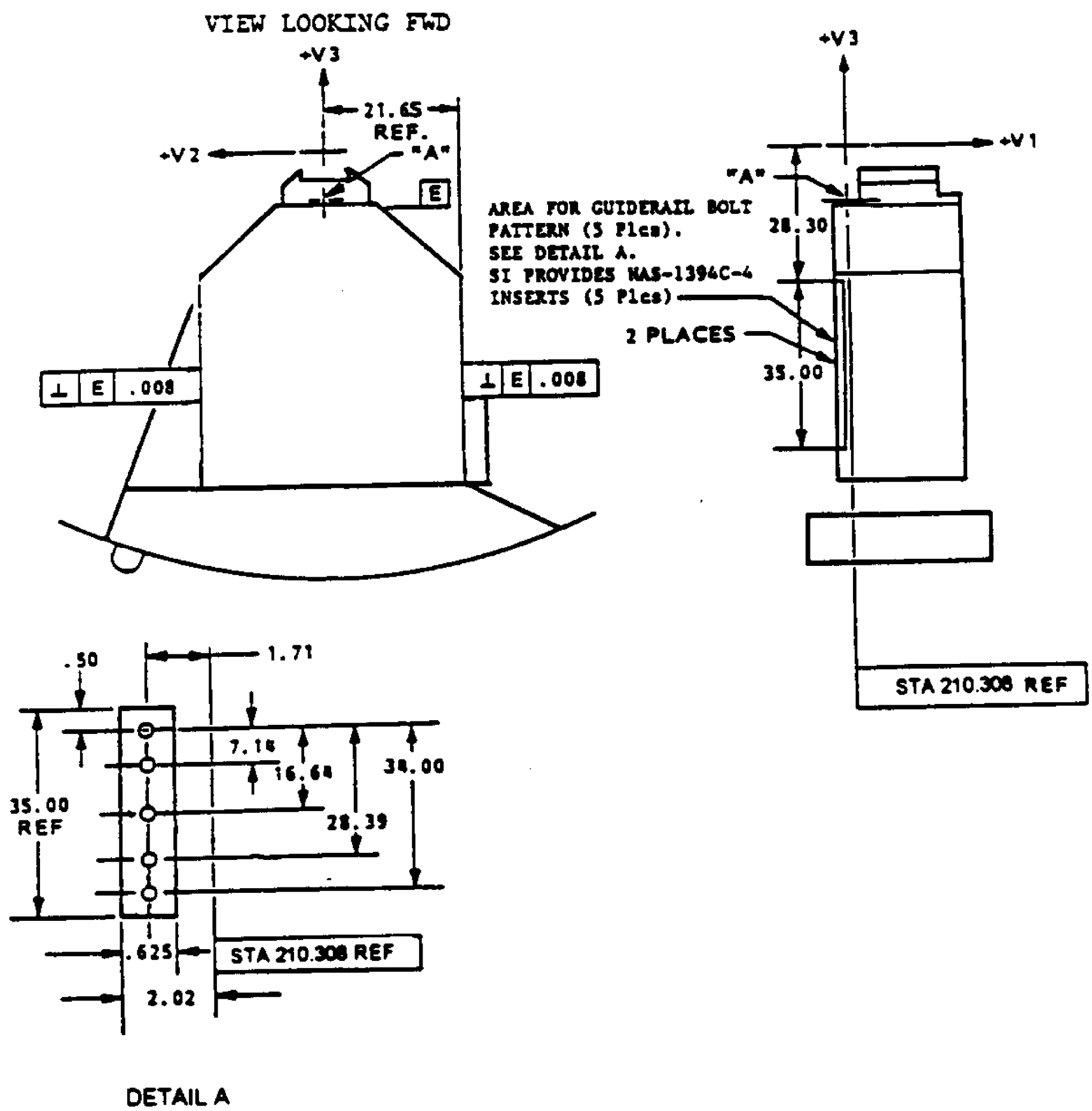

Admin Chg

IRN 054

IRN 071

Admin Chg

Figure 3.3-9 Radial SI Guiderail Interface

(Supersedes page 3.3-11 dated 17 March 1986)

LMSC RELEASED CONTROLLED

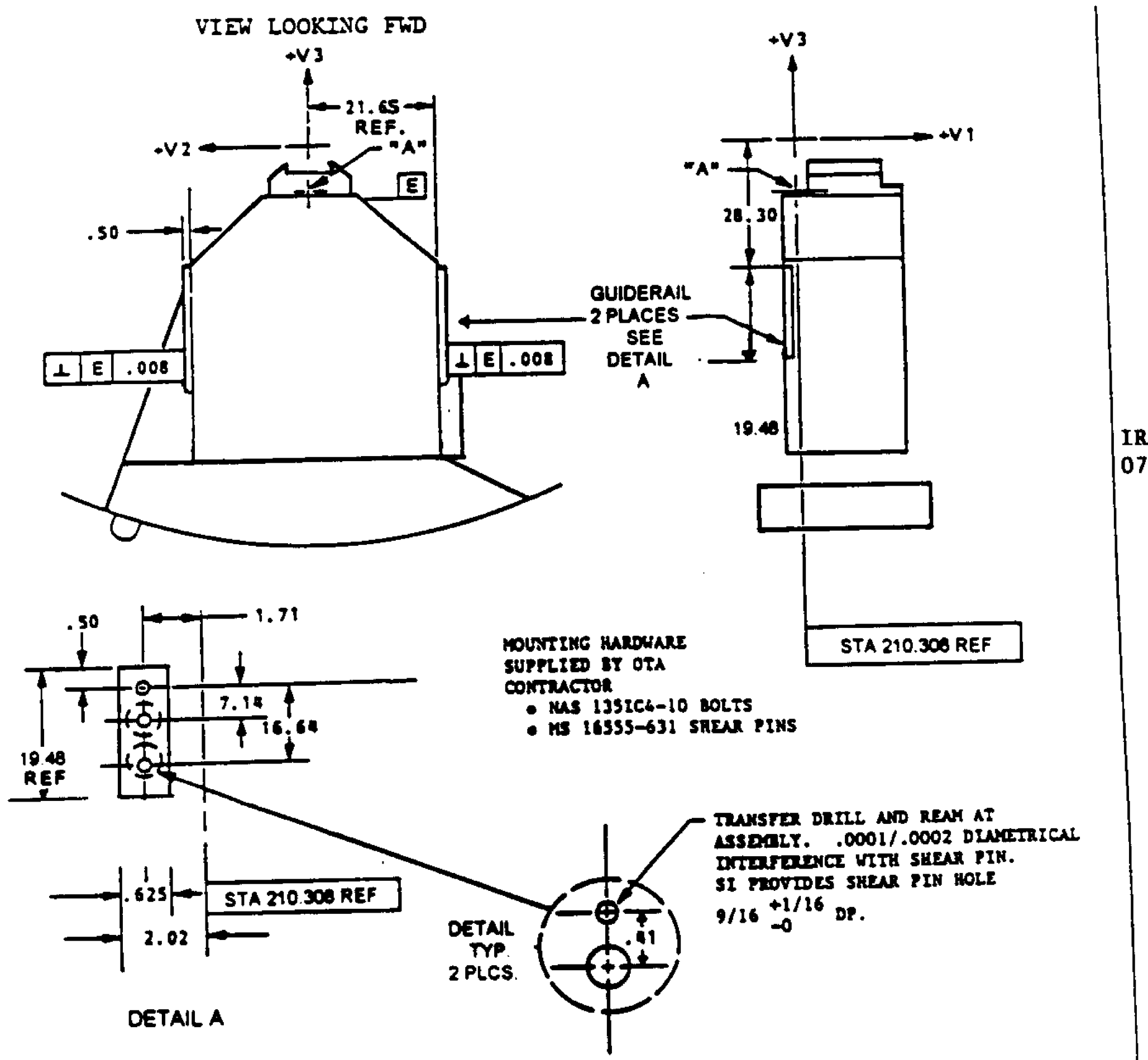

IRN 071

Figure 3.3-9a WFPC-I Guiderail Location

(New page created by IRN 071)

LMSC RELEASED CONTROLLED

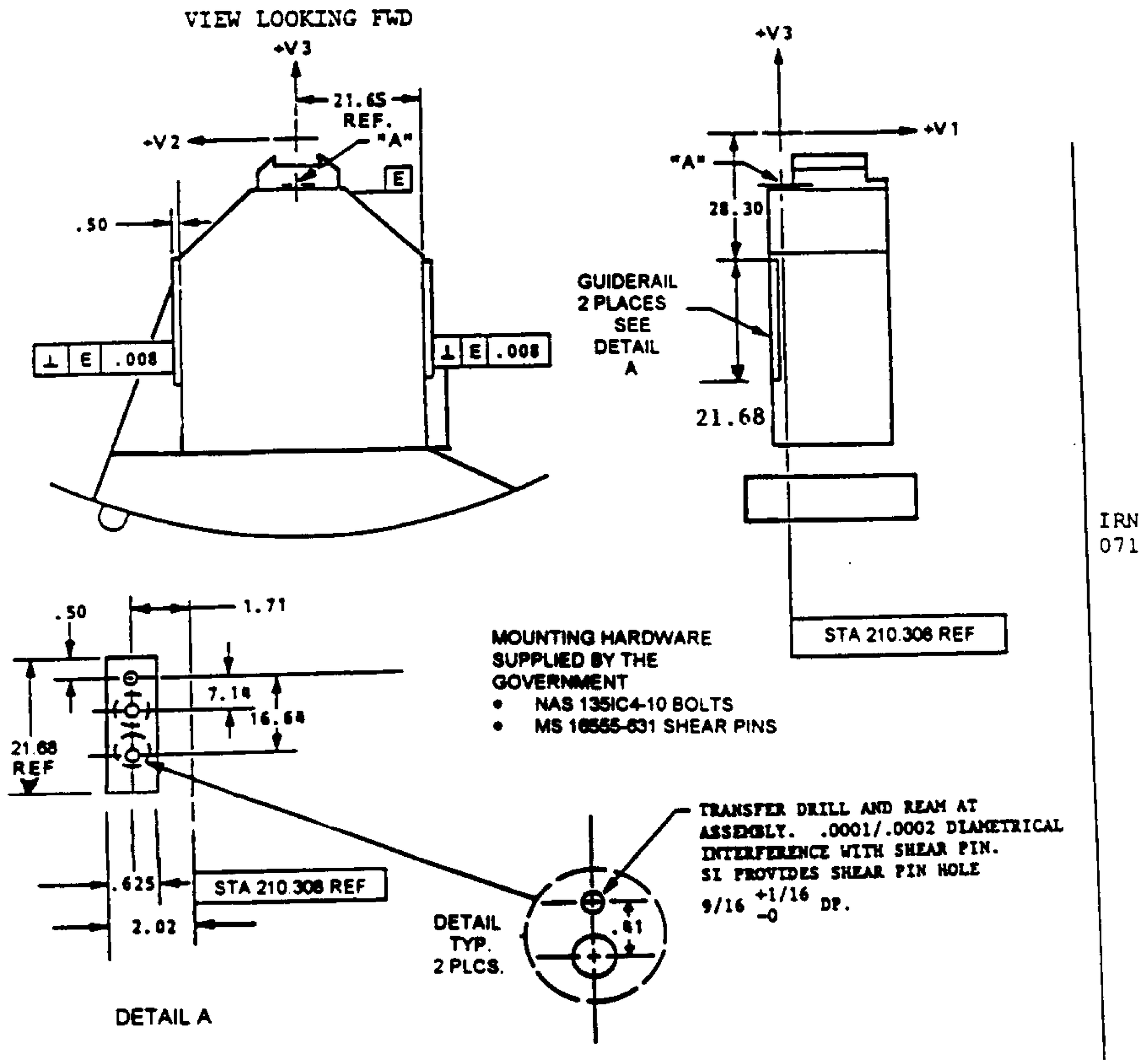

IRN 071

Figure 3.3-9b WFPC-II Guiderail Location

(New page created by IRN 071)

LMSC RELEASED CONTROLLED

3.3.6 Space Support Equipment Interfaces. There are three sets of primary Space Support Equipment (SSE) interface points; (1) the four main handling points on the radiator for the astronaut handhold, (2) the attachment provision for the equipment tether ring, and (3) the SSE Mirror Protective Cover attachment points. Other points that are available for use as SSE interface points are points "A", "B" and "C". IRN 071

3.3.6.1 SSE Handhold Interface. The SSE astronaut handhold interface points on the radiator are at the same locations as the GSE interfaces shown in Figure 3.3-10, which gives the interface hole pattern, however the handhold requires the prior installation of four studs as shown in Figure 3.3-11. This installation of the studs will be performed by the astronaut for the WFPC-I. The studs will be installed prior to flight for the radial ORI, and are supplied by the government. IRN 076

3.3.6.2 Tether Ring Interfaces. The attachment provisions and interface for the equipment tether ring are given in Figures 3.3-12 and 3.3-13. The equipment tether ring and its drill template are provided by the government. IRN 071

3.3.6.3 Space Operations Mirror Protective Cover. The interface points for the SSE Mirror Protective Cover are the same as for the GSE cover and are given in Figure 3.3-14a. The SSE Mirror Protective Cover is shown in Figure 3.3-14b. This cover is supplied by the government and is installed onto the SI prior to installation into the SIPE. It is removed by the astronaut after removal of the SI from the SIPE in orbit, and just prior to insertion of the SI onto the OTA. IRN 076 IRN 071

3.3.7 Alignment. Alignment values include all mechanical, latching mechanism, and optical effects. The alignment stability applies to any point in the data field of view.

3.3.7.1 Alignment of the Radial SI within the OTA. The radial SI registration point "A", is located at HST coordinates:

V1	V2	V3
210.308 (Ref)	0.000 ±0.004	-12.600 ±0.004

Decenter (V2 and V3) misalignment of the Radial SI due to misalignment of the OTA contractor supplied tooling is less than 0.009 inch.

The SI is aligned parallel to the HST coordinate system within 74 arc sec, including the alignment effects of the OTA Contractor supplied tooling.

IRN 049, 071

3.3.7.2 Short Term Stability of OTA/SI Alignment (24 Hours). During science mission observation by the SI, the maximum displacement of the SI registration fitting (Point A) with respect to the OTA focal plane is ± 0.3 um in V2 or V3 and ± 7.5 um in V1 during any single exposure period. The single exposure period is the entire period of time that the ST is registered on a target and is receiving information.

LMSC RELEASED CONTROLLED

Admin Chg

IRN 054

IRN 071

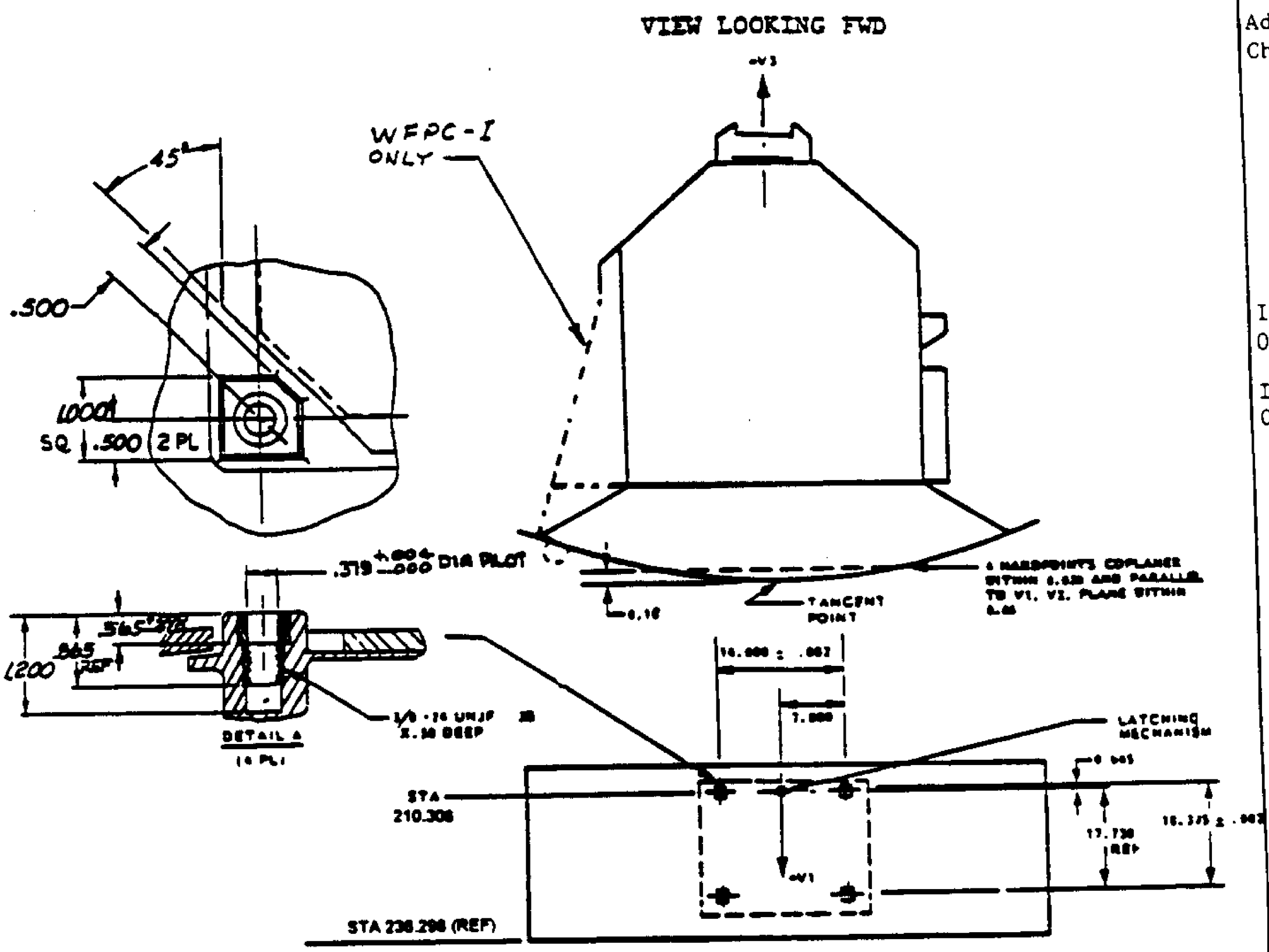

Figure 3.3-10 SI/GSE/SSE Hardpoints

LMSC RELEASED CONTROLLED

(Supersedes page 3.3-13 dated 17 March 1986)

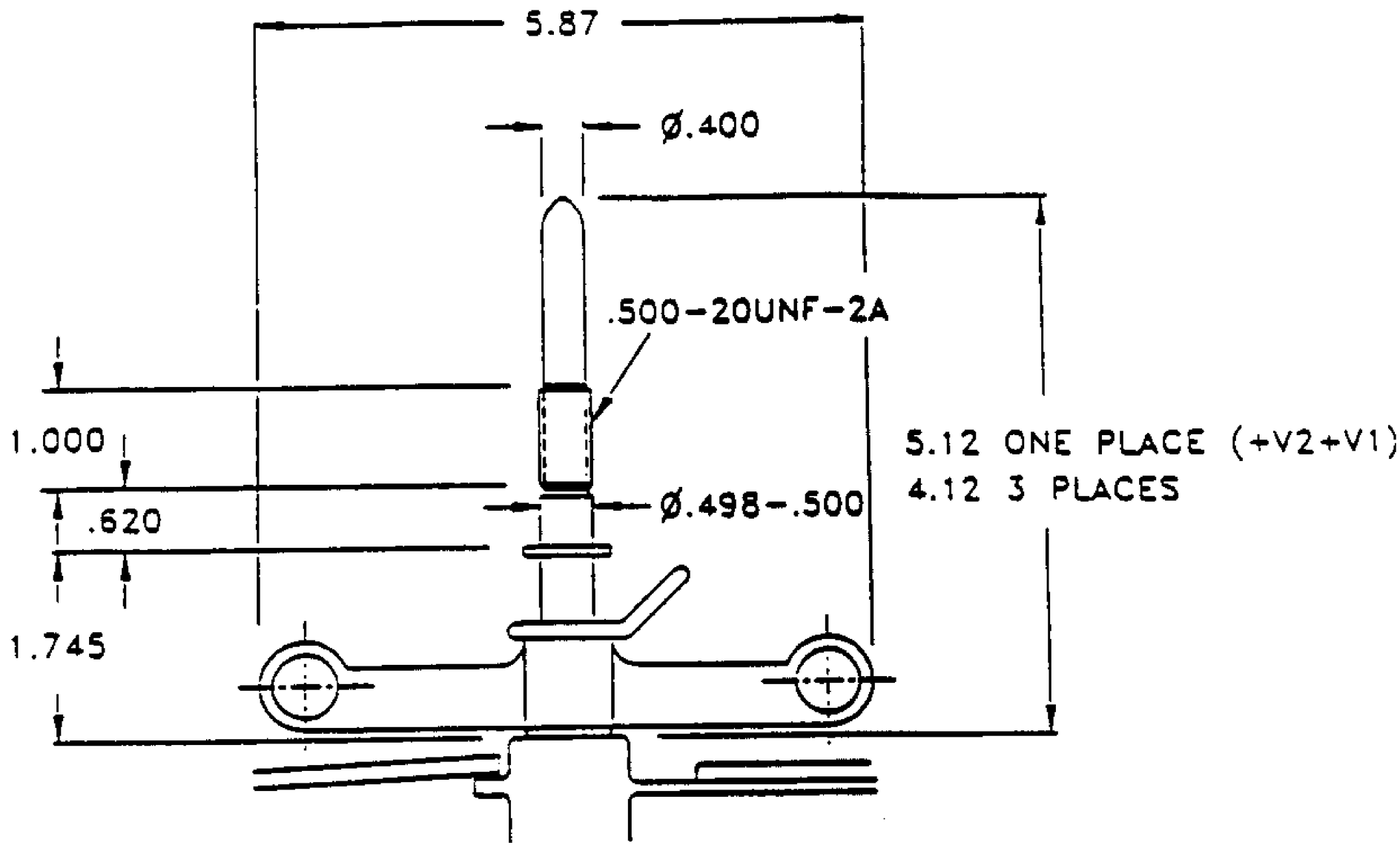

DETAIL A

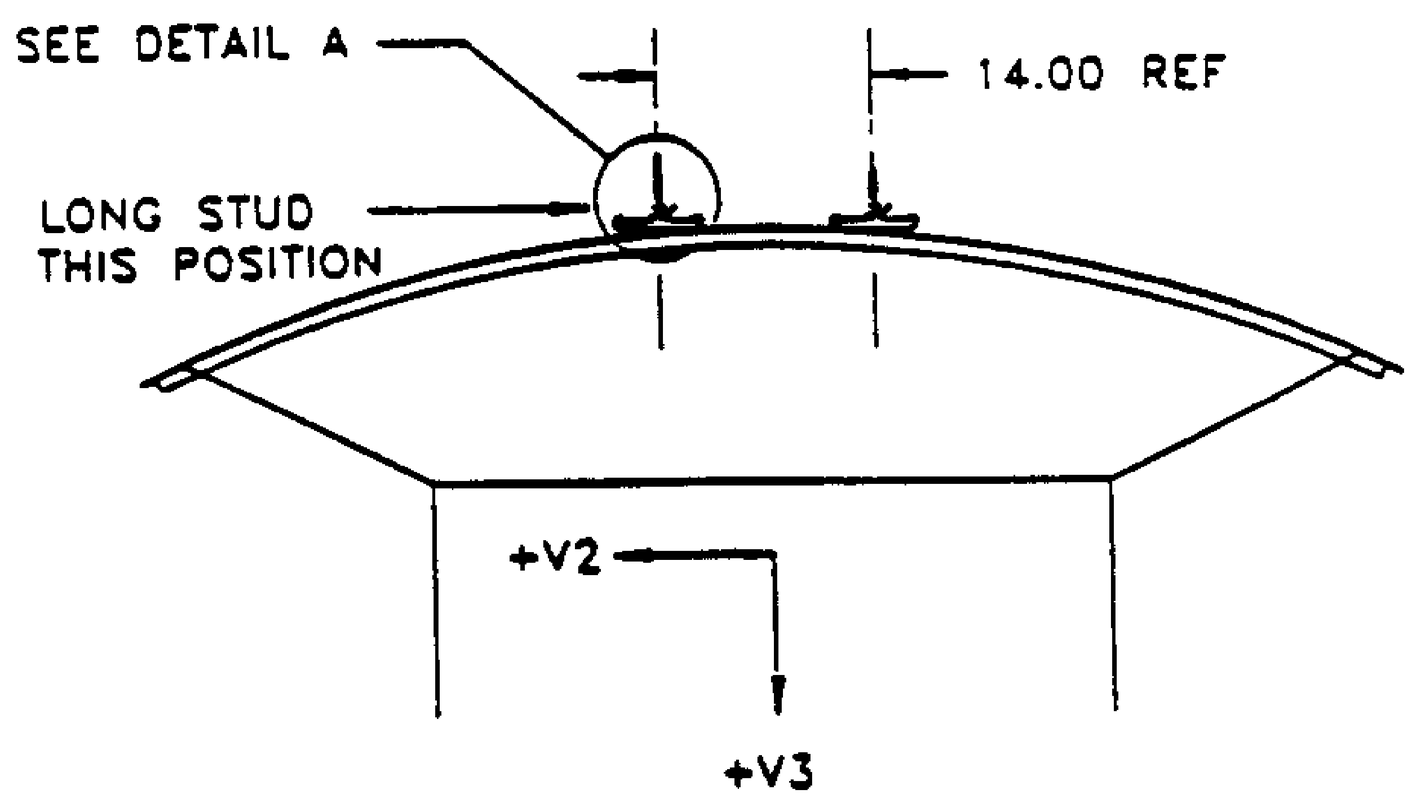

IRN 071

Figure 3.3-11 SSE Positioning Handhold Interface

(Supersedes page 3.3-14 dated 29 June 1984)

LMSC RELEASED CONTROLLED

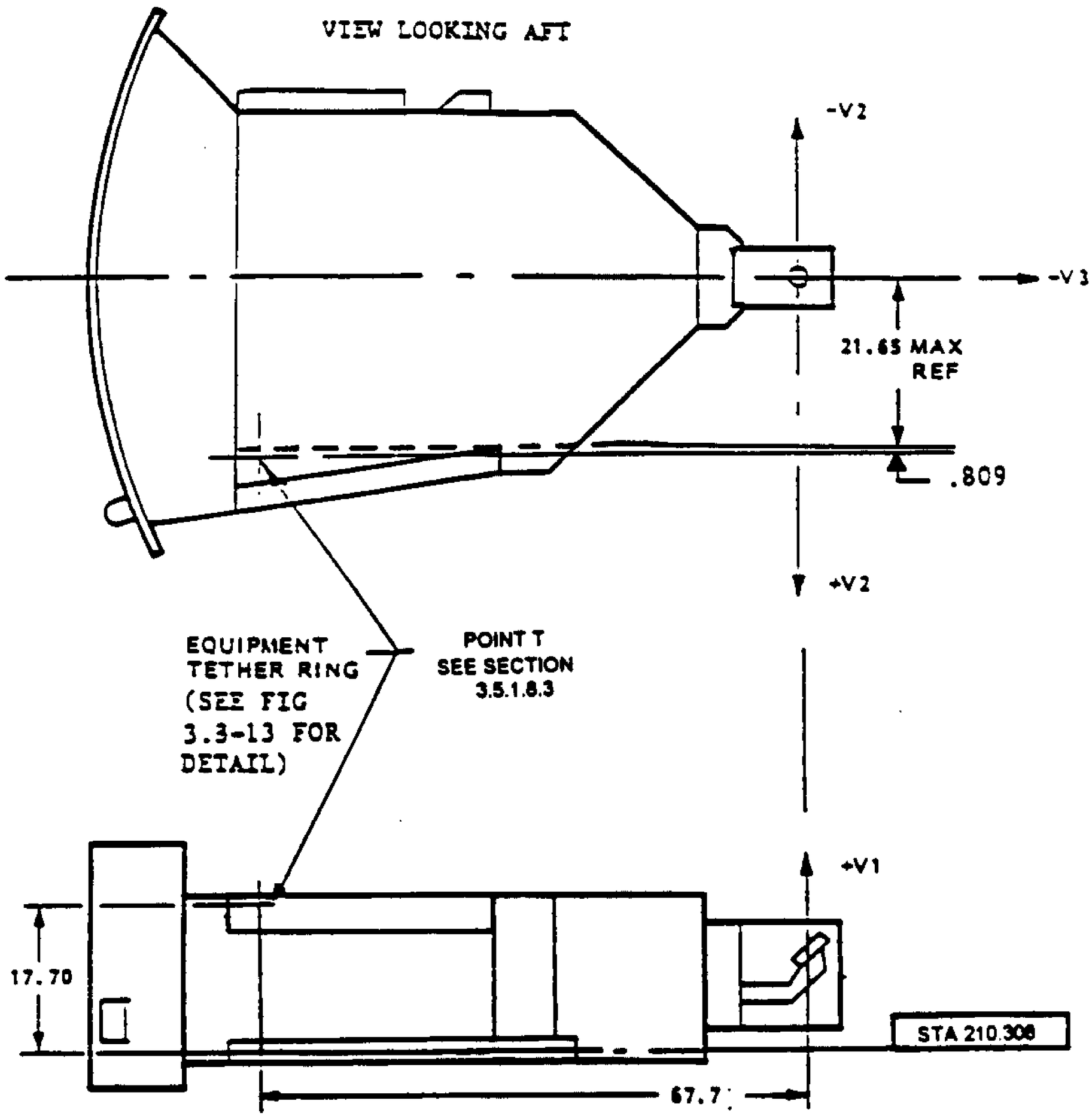

IRN 054

IRN 071

IRN 071

IRN 054

NOTE: THE TETHER LOOP IS CONTAINED WITHIN THE VOLUME DEFINED BY THE SOLID LINES

Figure 3.3-12 SSE Attachment Provision and Equipment Tether Location/Access Envelope

LMSC RELEASED CONTROLLED

(Supersedes page 3.3-15 dated 17 March 1986)

IRN 044

IRN 071

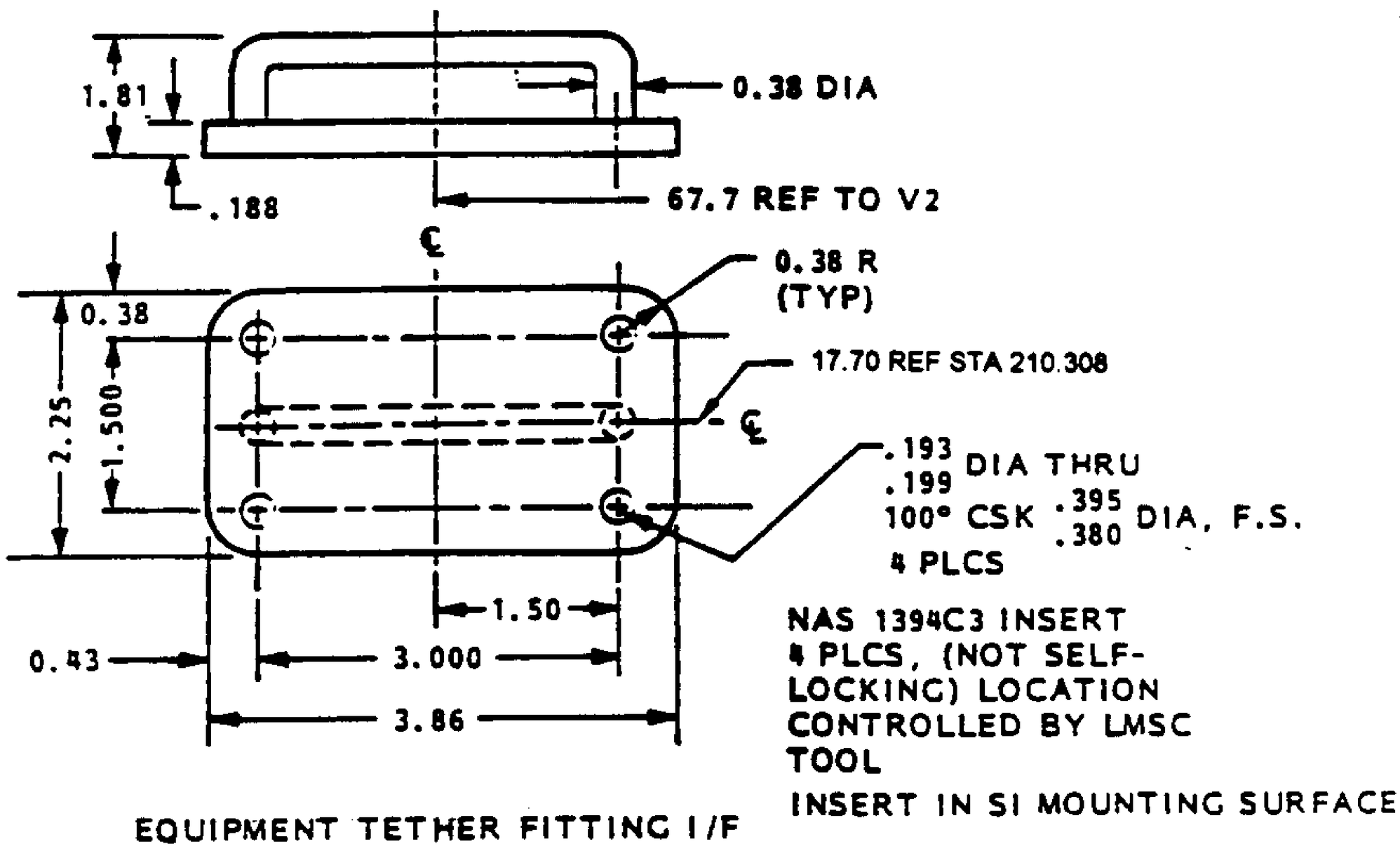

Figure 3.3-13 SSE Attachment Provisions and Equipment Tether Interface Details

LMSC RELEASED CONTROLLED

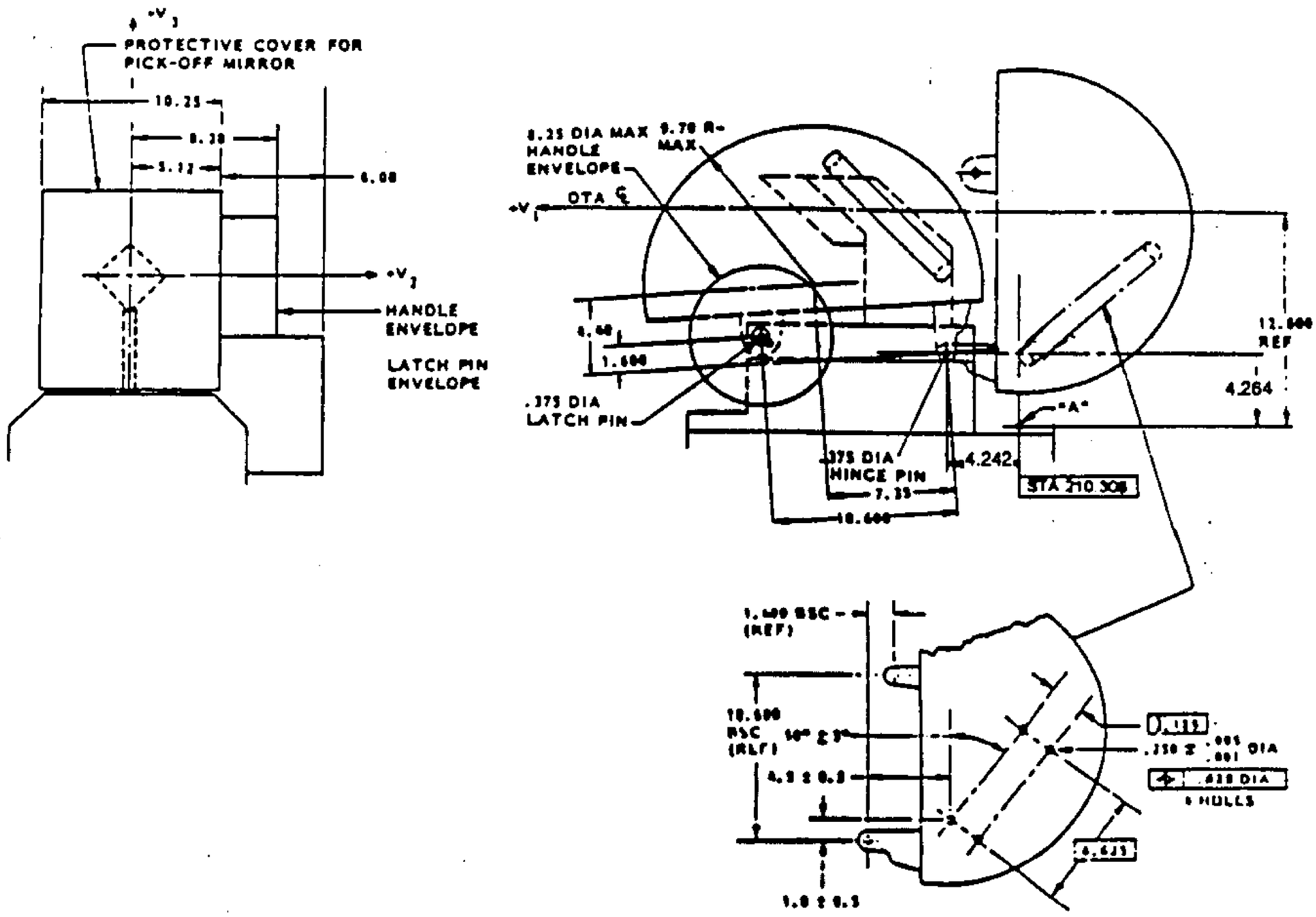

IRN 071, 073

WFPC-I

Figure 3.3-14 WFPC-I Pick-off Mirror Envelope and Ground Operations Protective Cover

IRN 071, 073

(Supersedes page 3.3-17 dated 12 February 1993)

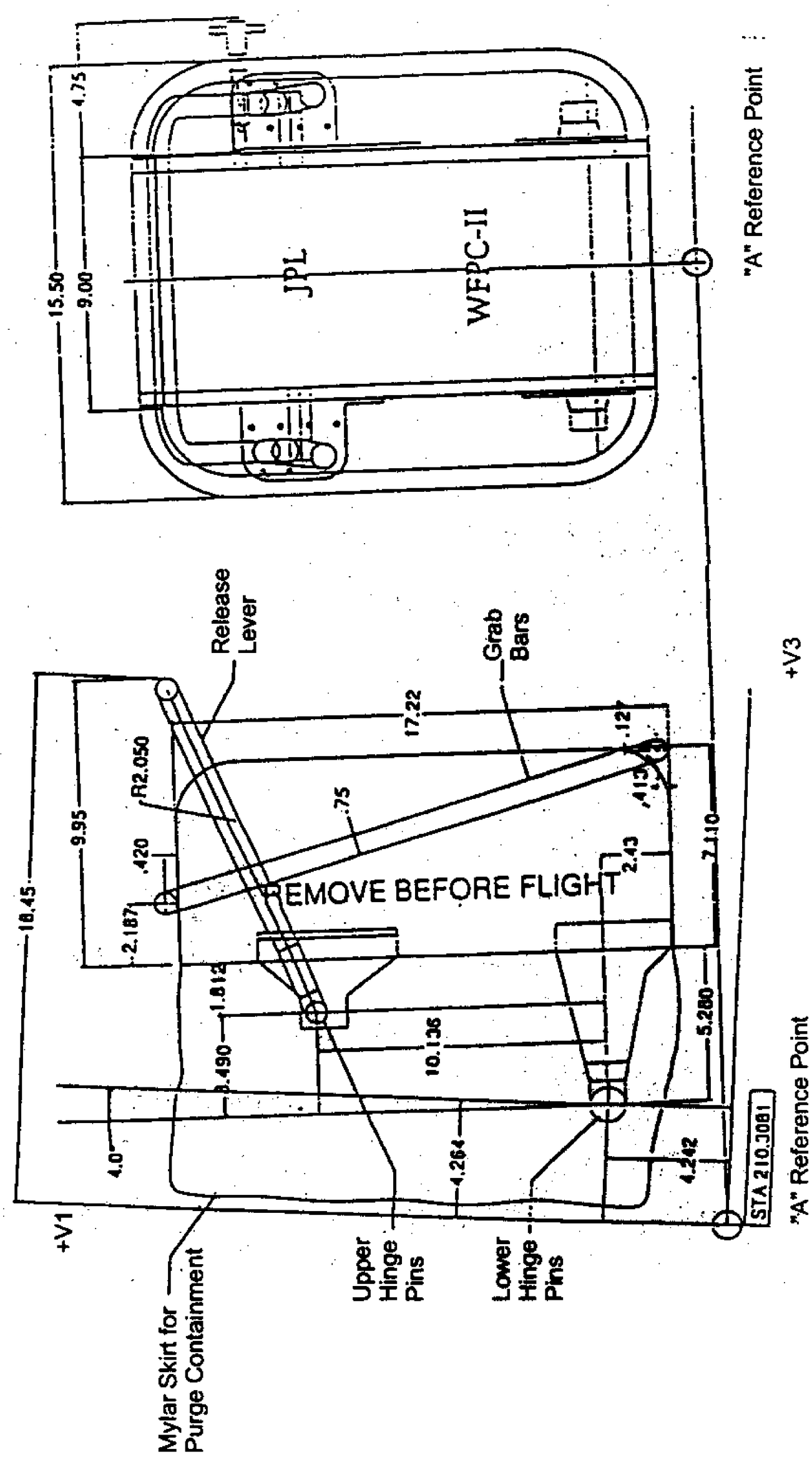

Figure 3.3-14a Radial ORI GSE Mirror Protective Cover

IRN 073, 076

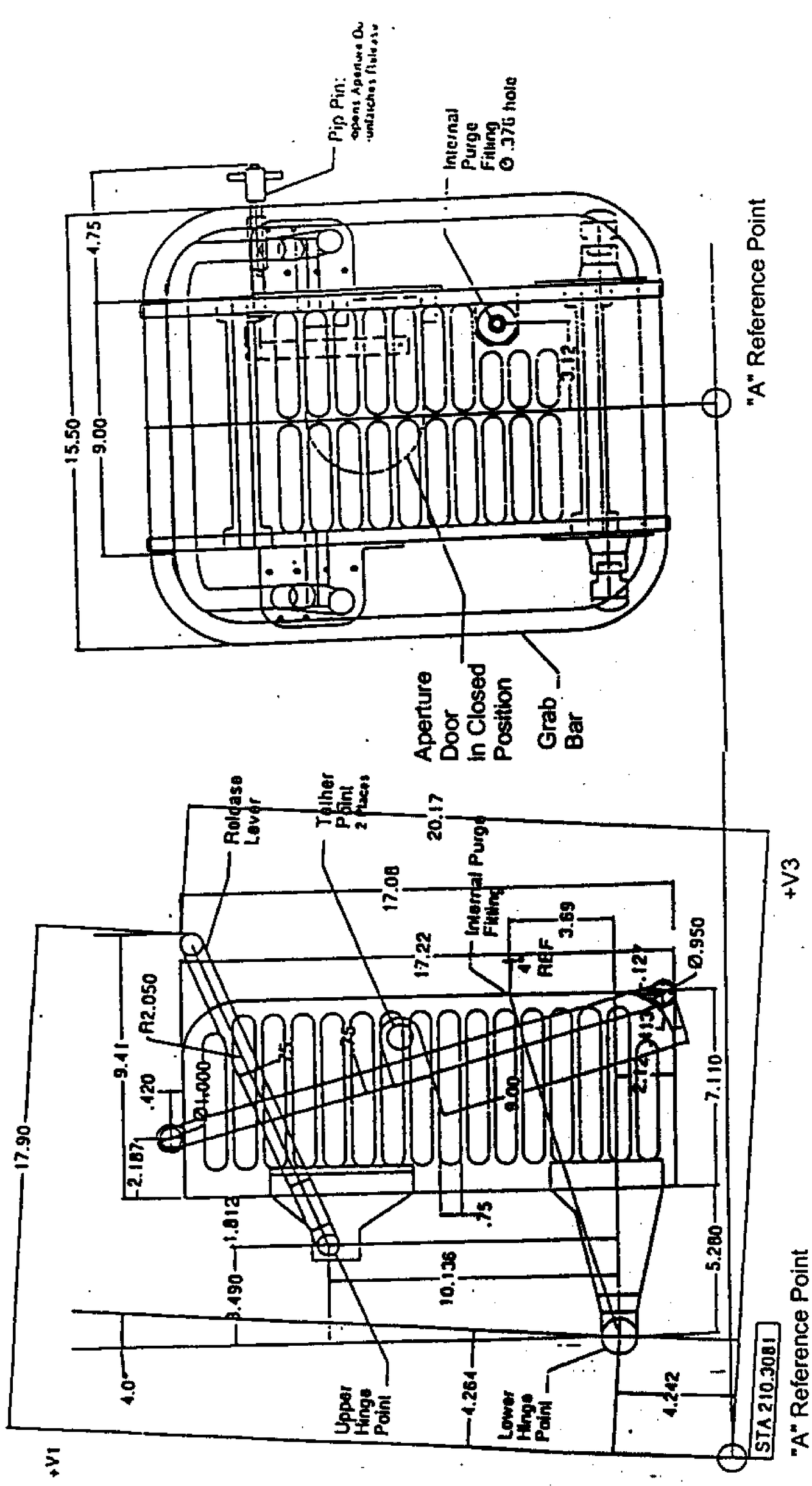

Figure 3.3-14b Radial ORI SSE Mirror Protective Cover

IRN 073, 076

Maximum Rotation of the SI, treated as a rigid body, about Point 'A' is constrained by the OTA focal plane structure to less than ± 0.4 arc-sec during any single exposure period.

3.3.7.3 Long Term Stability of OTA/SI Alignment (100 Hours). Long term stability is defined as that which is applicable to pointing repeatability. The maximum displacement of the radial SI registration fitting (Point A) with respect to the OTA focal plane is ± 1 um in V2 or V3 and to within ± 7.5 um in V1.

Rotations of the SI about its registration fittings about Point 'A' are constrained by the OTA focal plane structure to less than ± 0.5 arc-sec.

3.3.8 Orbital Removal and Installation. All SIs are designated as Orbit Replaceable Units (ORU). The OTA/SI interface is indexed to the OTA structure to provide the necessary alignment within allowable tolerances without in-orbit adjustment. Handrails as shown in Figures 3.3-14d and 3.3-14e shall be provided on the +V2 and -V2 sides of the follow-on radial ORIs. IRN 054 IRN 071

3.3.8.1 Crew and SI Safety During Change-Out. Shields or covers are provided by the SI for non-ruggedized portions and external optical elements of the radial SI to protect them from damage by an EV crewmember and from contamination during in-orbit changeout operations. Figure 3.3-14b shows the SSE protective cover for the pick-off mirror. IRN 071

All external 2 plane edges exposed to the EV crewmember have 0.12 inch minimum radius or as specified in NSTS 07700, Volume XIV, Appendix 7. All external 3 plane corners exposed to the EV crewmember have 0.25 inch minimum radius. Both these radii can be replaced with a 45 degree chamfer with leg dimensions equal to the specified radius with the resulting edges broken to 0.06 inch radius. Exposed edges of thickness less than 0.08 inches exposed to the EV crewmember have full radius or are rolled/curled. IRN 071

Access holes or openings in the dimensional range of 1.00 to 1.75 inches are guarded if exposed to the EV crewmember gloved hand. Small protrusions less than 0.187 inches are rounded to a radius of 0.04 inches. Edges of exposed IRN 071 IRN 071

LMSC RELEASED CONTROLLED

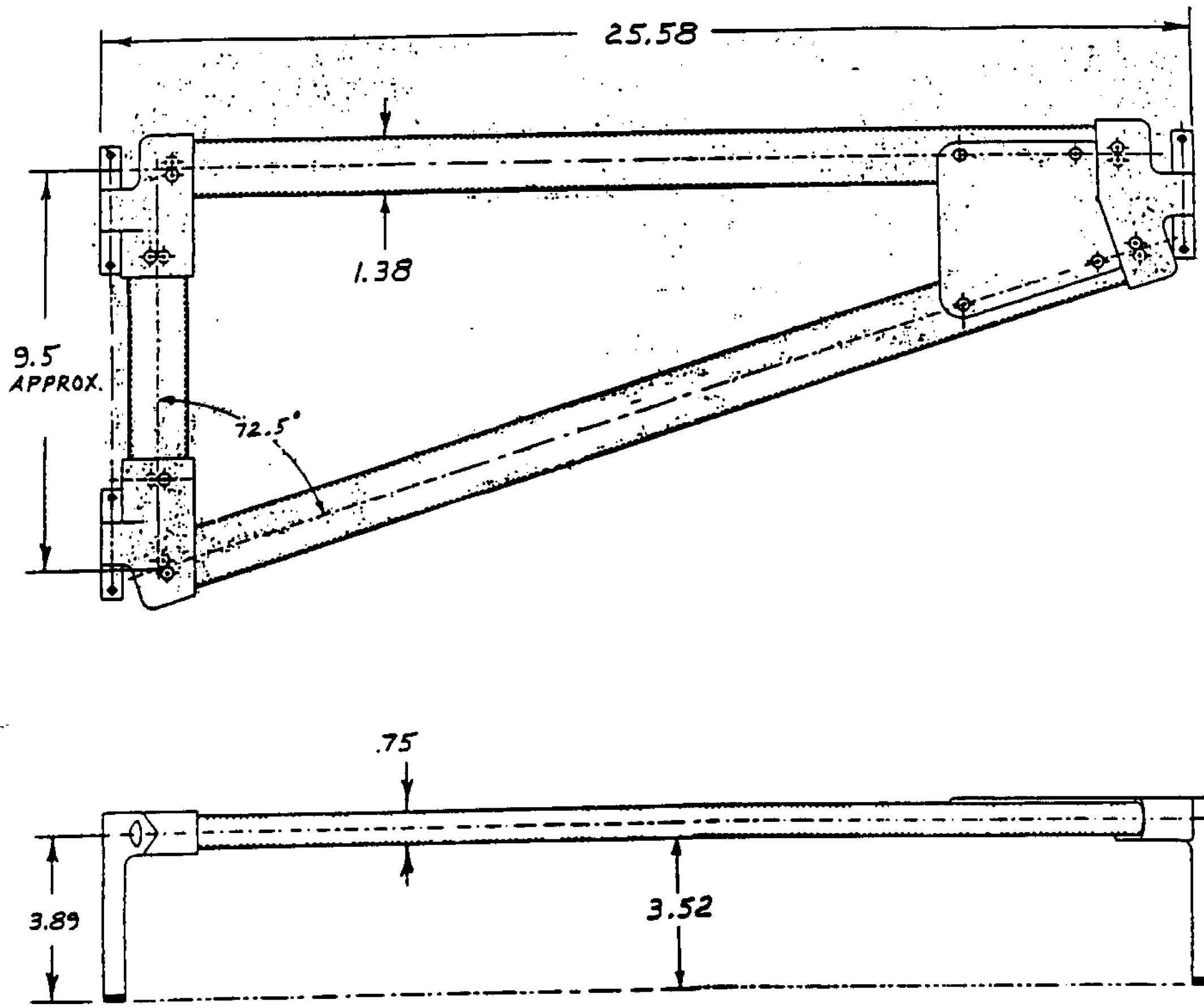

Figure 3.3-14d Positioning Handrail +V2 Side

(New page created by IRN 071)

LMSC RELEASED CONTROLLED

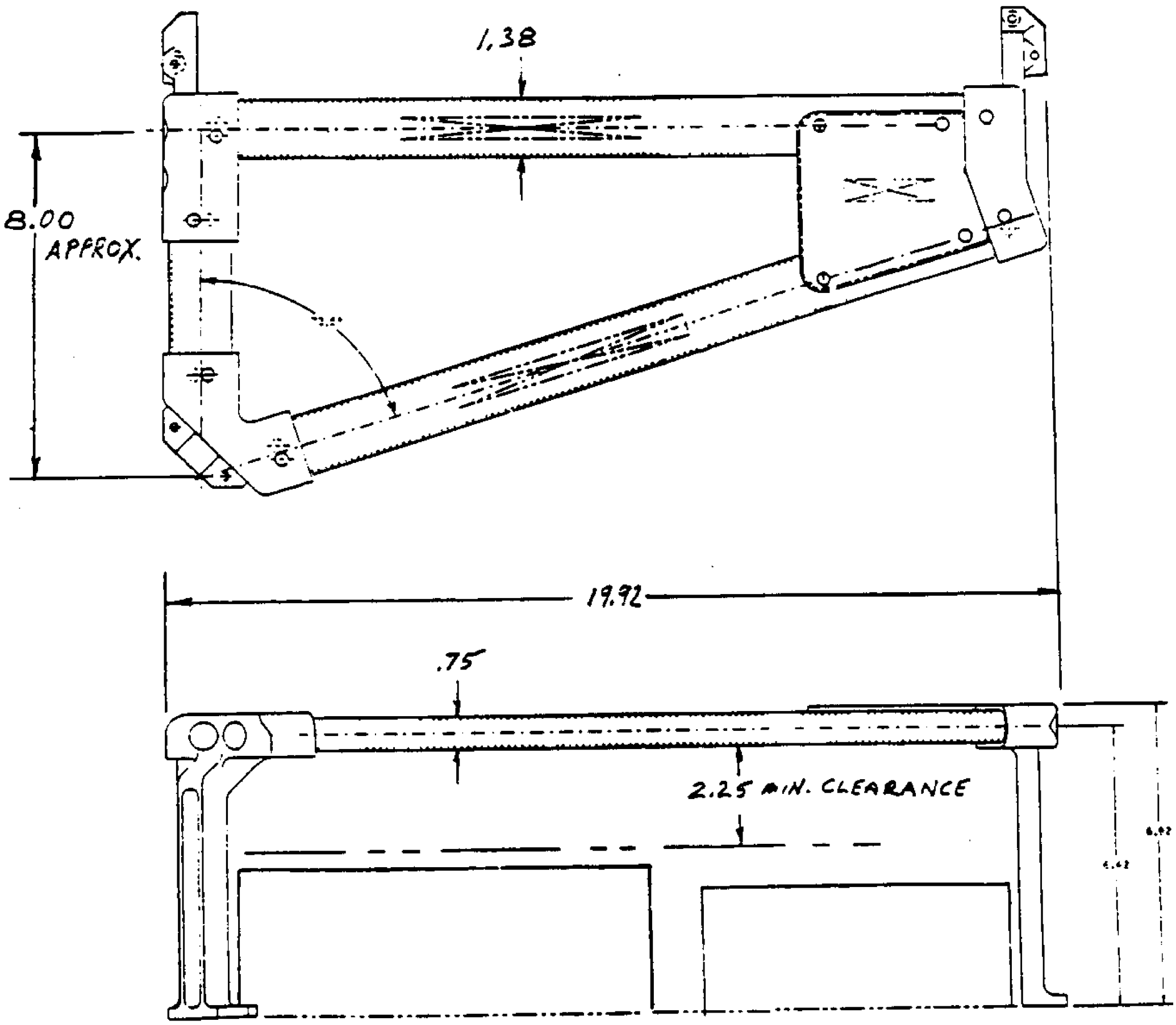

Figure 3.3-14e Positioning Handrail -V2 side

LMSC
RELEASED
CONTROLLED

mismatched surfaces (of less than 0.187 inches) are either smoothed and rounded to 0.06 inch radius, chamfered to 0.06 inch by 45 degrees or covered by an appropriate material.

When exterior MLI is used on the radial SI, the outer layer must be 0.002 inches minimum. Vent holes in the exposed surface of MLI are less than 0.4 inches in diameter to prevent snagging. SI changeout does not require MLI removal or alteration. The total MLI blanket thickness is included in design solutions to meet the edge and corner requirements for crew safety.

3.3.9 Electrical Connector Bracket. Electrical connector bracket is located on the SI as shown in Figure 3.3-15 and is provided by the government. The connector jacking rod interface is shown in Figure 3.3-16. The jacking rod is supplied by the government. Electrical plug/receptacle mating is accomplished using a torque range of 7.5 to 9.2 ft/lbs. The interface bolts, nuts and washers are supplied by the government. The cylindrical/conical lead-in is supported and supplied by the SI contractor. IRN 071

3.3.9.1 Test Connector Location. Test connector for verification of the SI is shown in Fig. 3.3-17. Clock reversal connector location is shown in Fig. 3.3-17a. IRN 044

3.3.9.2 Ground Strap Location. The ground strap is shown in Fig. 3.3-17. The ground strap will be secured to the SSM structure during in-orbit changeout. The ground strap is supplied by the OTA Contractor and the captive screw and receptacle is supplied by the SSM contractor.

3.3.10 Venting, Pressurization and Purge.

3.3.10.1 WFPC-I. Vents for the Radial SI are located in the zone along the -V3 face of the instrument as shown in Figure 3.3-18. Additionally, the UV Flood Light Channel on WFPC-I shall be vented to the SSM. The purge fitting IRN 054 IRN 071

LMSC RELEASED CONTROLLED

is located on the SI as shown in Figure 3.3-18. A purge is provided continuously by the SSM while the SI is at the HST assembly facility, in transit to and at KSC except for periods of up to one hour. The purge is terminated 13.5 to 72 hours prior to launch. The purge fitting is supplied by the SSM contractor and installed by the SI contractor. Quality of the purge gas is as follows:

Gas	Purity	
KSC manufactured breathing air (Synthesized from LO_2 and LN_2)	Nitrogen	80 ± 1%
	Oxygen	20 ± 1%
With the following allowable impurities		
Water (ppm)	5.7	
Dewpoint (°C @ 21°C, 760 mm)	-64.4°C	
Hydrocarbons, (ppm as CH_4)	5.0	
Hydrogen, (ppm)	25.0	
Argon, (ppm)	400.0	
Carbon dioxide, (ppm)	5.0	
Carbon monoxide, (ppm)	5.0	
Neon and Helium, (ppm)	25.0	

IRN 071

LMSC RELEASED CONTROLLED

Seven micron nominal filtration is provided by the SSM contractor. The SSM provides to each SI a purge gas flow of up to 3 ft^3/hr at a maximum pressure of 0.25 psig for SI safety.

3.3.10.2 WFPC-II. Vents are provided for the housing, the electronics and the calibration system. For the housing, launch ascent vents are via the radiator tube and around the pick-off mirror cover seal in addition to various small vents around the housing, and the large on-orbit vent via the open aperture into the HST hub. Vents are provided on the + V2 and - V2 side surfaces for the electronics, and on the + V2 surface for the calibration system, via outboard vents which avoid direct pathways back into the contamination sensitive housing. Purge fittings are located on the SI as shown in Figure 3.3-18. Vents are shown in Figure 3.3-19.

IRN 071

3.3.10.2.1 WFPC-II Purge. A continuous purge of the WFPC-II shall be provided by the SI contractor prior to its installation into the SIPE. Once installed

in the SIPE, the purge line to the WFPC-II shall be supplied by the SIPE contractor or NASA. It shall be connected to the female fitting on the Pick-Off Mirror Cover, which is nominally oversized by 0.001 inch to accept this line as a slip fit. The purge line shall be cleaned to minimize molecular and particulate contamination of the purge gas, and shall include a 2-micron filter as close to the SIPE as possible.

The SI shall be purged continuously from the time of installation in the SIPE up to the time of launch (T-0) with the understanding that, under conditions of extreme hardship, purge may be interrupted for no more than one hour in any 24-hour period. WFPC-II shall be provided with a 5-10 ft^3/hr supply gas flow. The supply gas may be either manufactured air or dry nitrogen.

In order to insure that the quality of the purge gas which exits the purge cart meets the requirements as defined in the WFPC-II Contamination Control Plan, PD 751-38, the quality of the supply gas as measured at the inlet to the purge cart shall be specified as:

	KSC manufactured breathing air	Gaseous Nitrogen
Nitrogen	80 ± 1%	99.5%
Oxygen	20 ± 1%	5000 ppm
with the following allowable impurities:		
water	5.7 ppm	11.5 ppm
dewpoint (°C @ 21°C, 760mm)	-64.4°C	-59.4°C
hydrocarbons as (CH_4)	5.0 ppm	5.0 ppm
Hydrogen	25.0 ppm	NA
Argon	400.0 ppm	NA
Carbon dioxide	5.0 ppm	NA
Carbon monoxide	5.0 ppm	NA
Neon and helium	25.0 ppm	NA
Total impurities	NA	5000 ppm

The supply gas particulate requirement shall be level 140 per MIL-STD-1246B.

LMSC RELEASED CONTROLLED

3.3.10.3 WFC3. (TBD) IRN 076

(New page created by IRN 076)

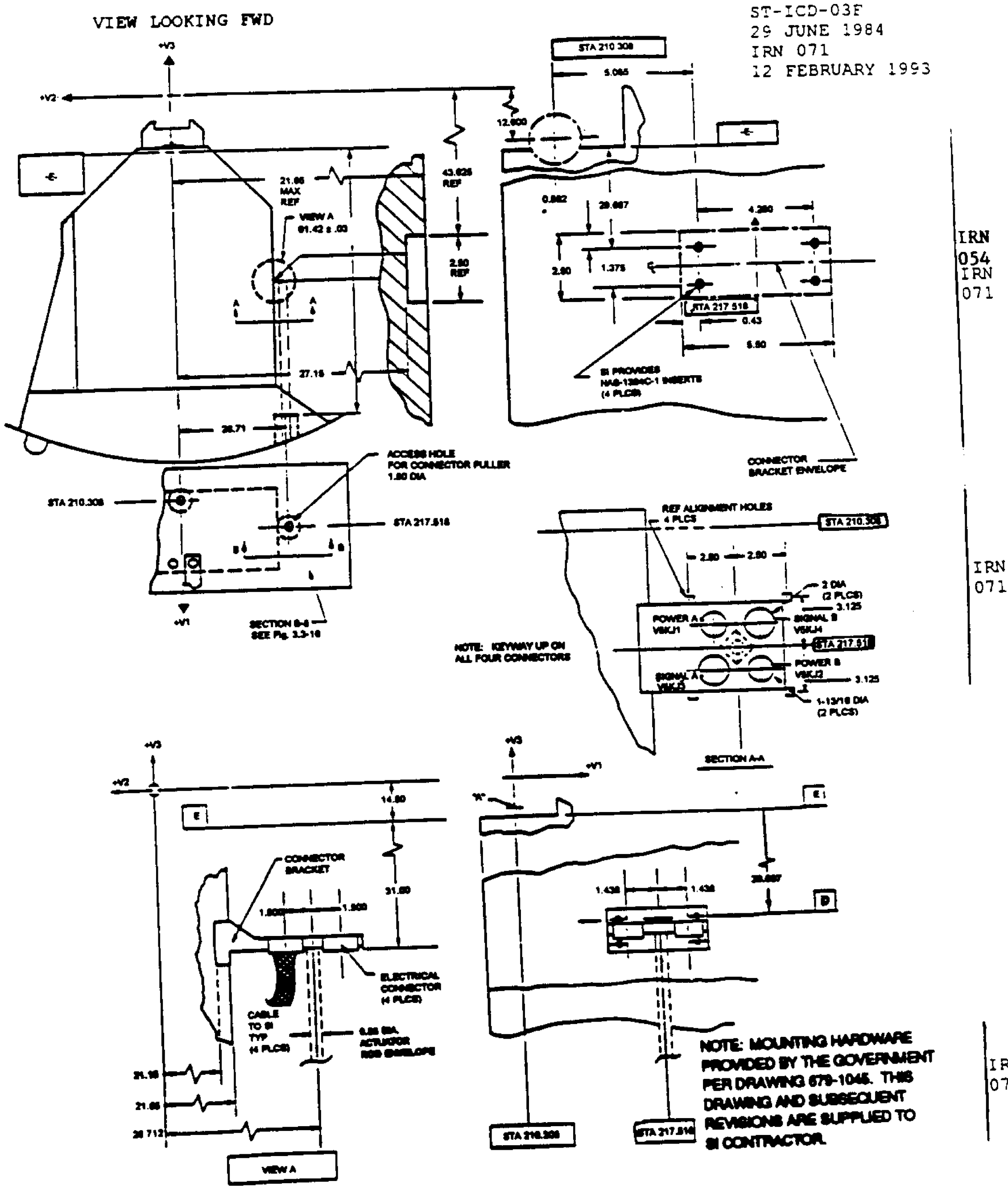

IRN 054 IRN 071

IRN 071

IRN 071

Figure 3.3-15 Radial SI Electrical Connector Bracket Interface

LMSC RELEASED CONTROLLED

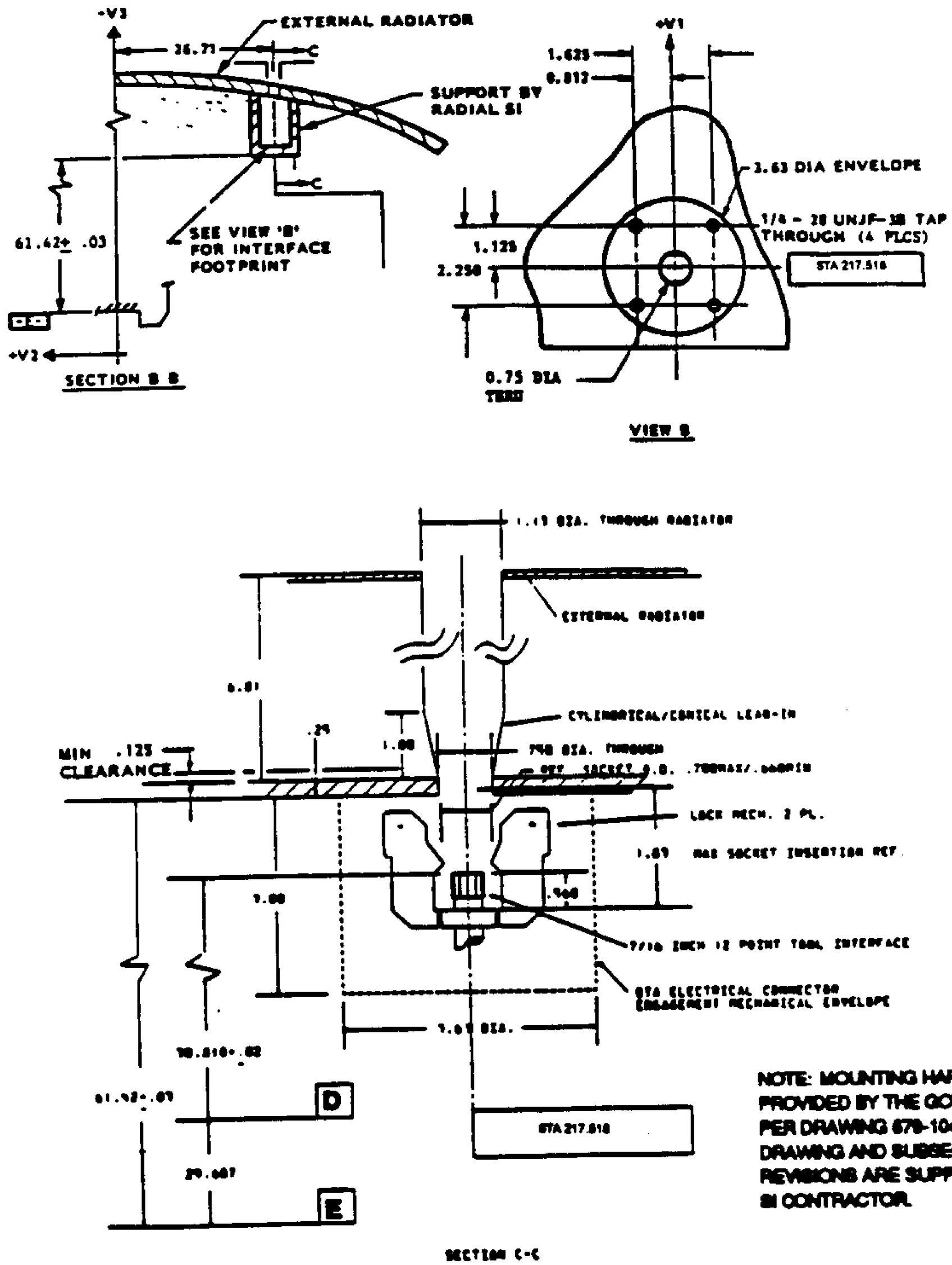

NOTE: MOUNTING HARDWARE PROVIDED BY THE GOVERNMENT PER DRAWING 679-1045. THIS DRAWING AND SUBSEQUENT REVISIONS ARE SUPPLIED TO SI CONTRACTOR.

IRN 071

Figure 3.3-16 Radial SI Electrical Connector Jacking Rod Interface

IRN 071

(Supersedes page 3.3-22 dated 29 June 1984)

LMSC RELEASED CONTROLLED

Admin Chg

IRN 055

IRN 054

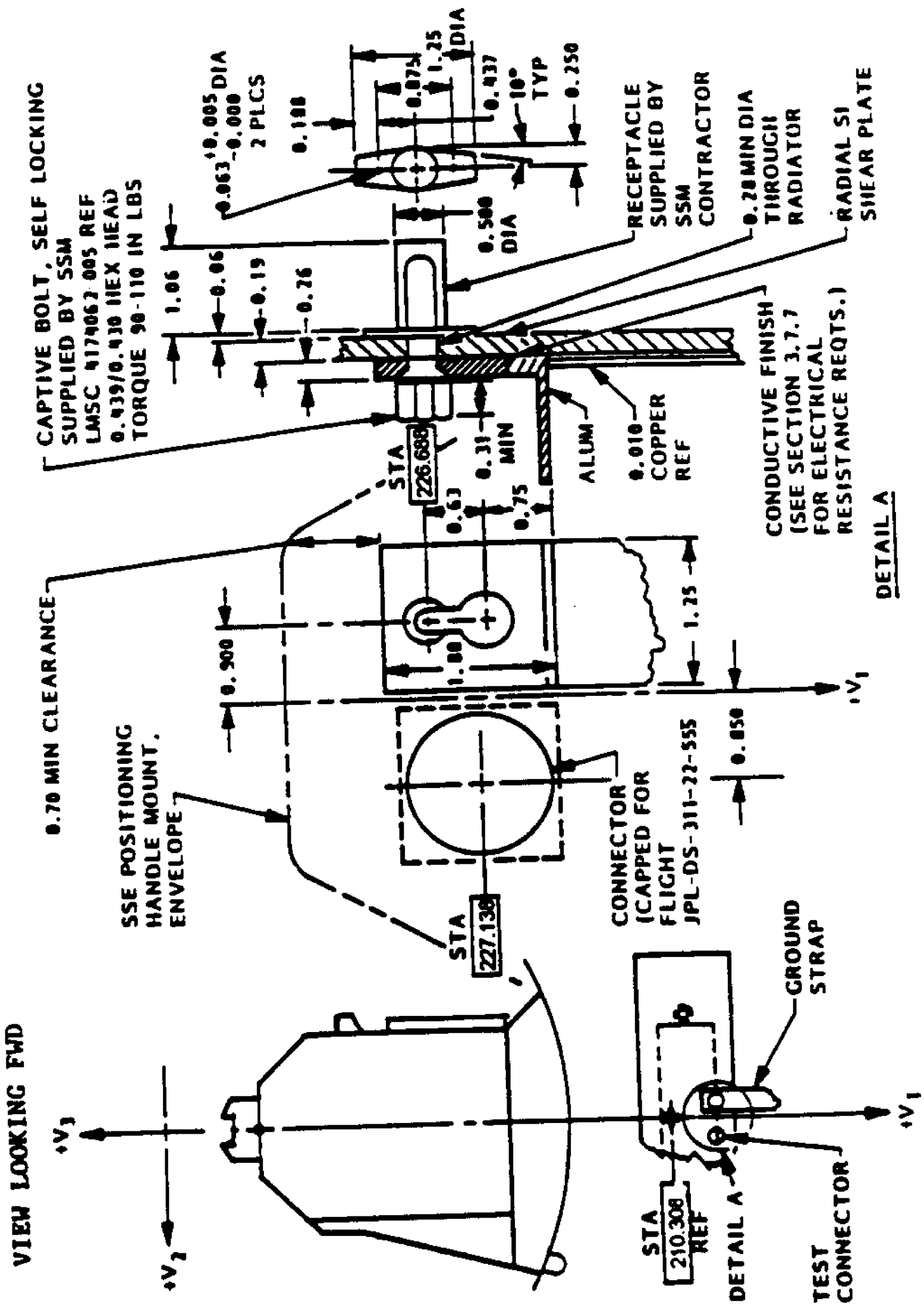

IRN 071

Admin Chg

IRN 071

IRN 071

Figure 3.3-17 Test Connector & Ground Strap Interface Locations (Details)

LMSC RELEASED CONTROLLED

(Supersedes page 3.3-23 dated 5 May 1986)

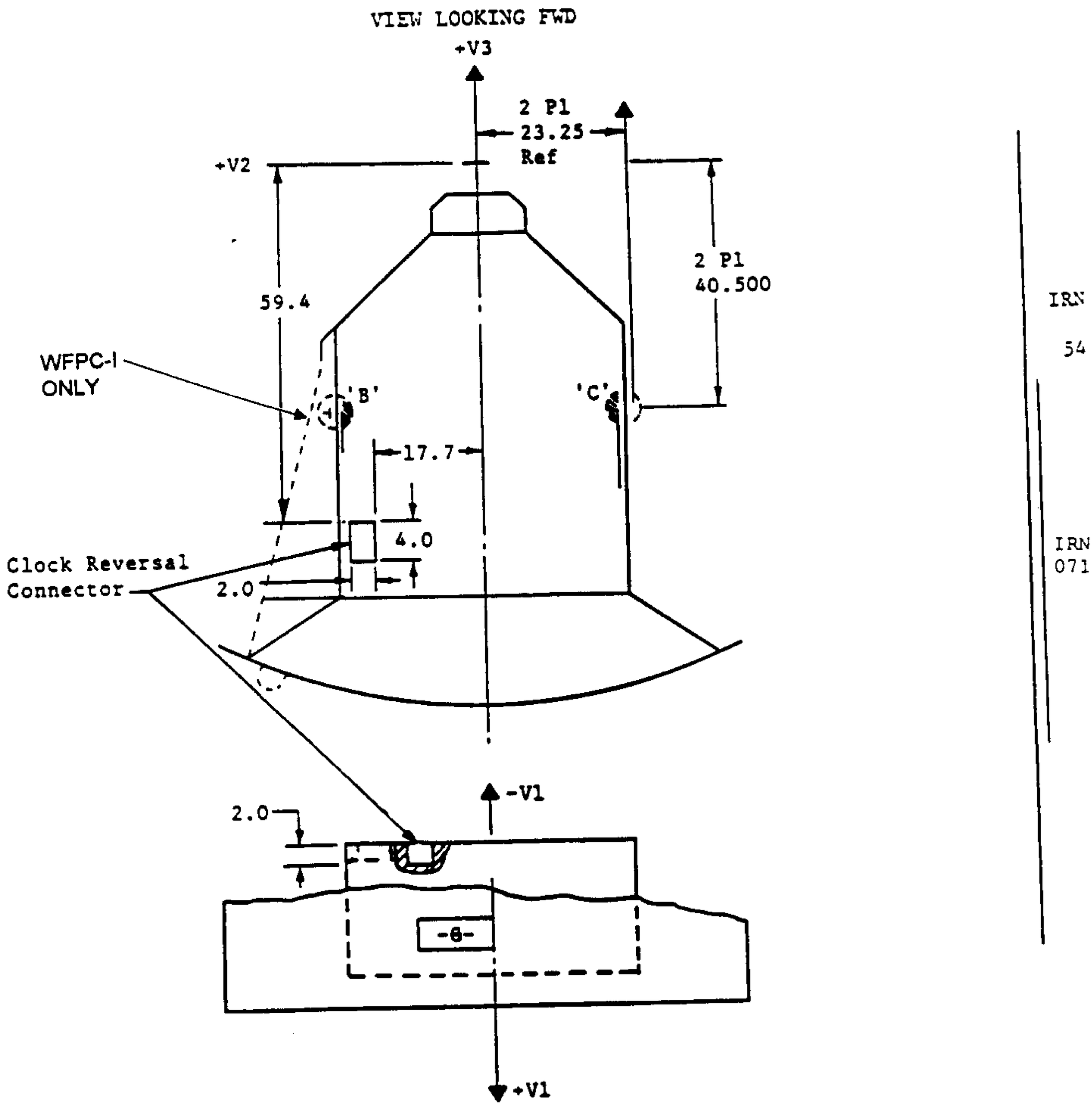

Fig. 3.3-17a Clock Reversal Connector Location

LMSC
RELEASED
CONTROLLED

Admin Chg

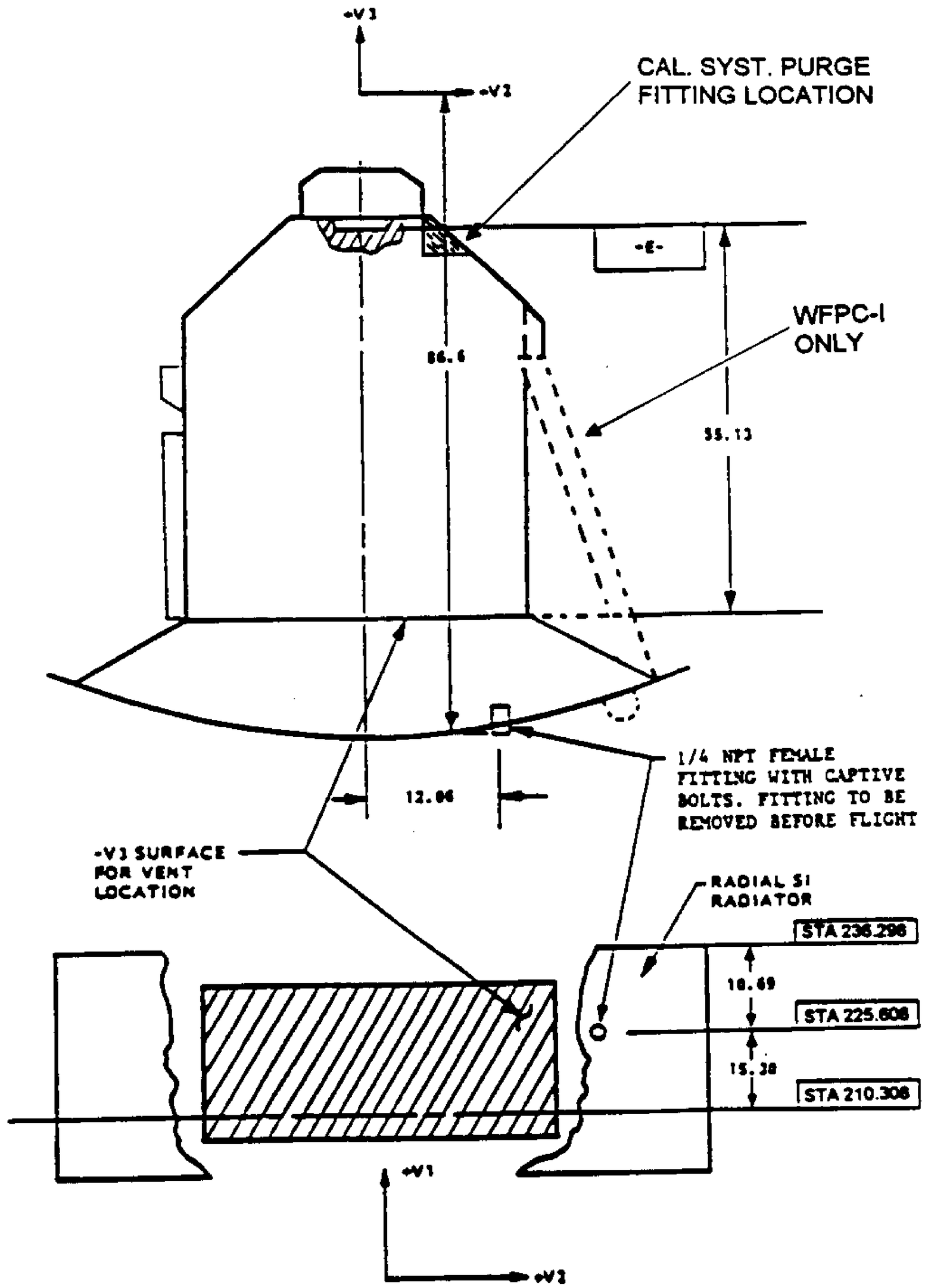

IRN 054, IRN 071

IRN 071

Figure 3.3-18 Radial SI Vent and Purge Location

LMSC RELEASED CONTROLLED

3.4 Optical Interfaces. The as-built conic constant of the primary mirror (PM) was determined from the following:

1) Measurements of the null lens used to figure the PM
2) In orbit data from the FOC
3) In orbit data from the WFPC

The various analytical techniques used to determine the conic constant, coupled with lack of some measurements on the null lens system, yielded values ranging from -1.01326 to -1.01405. Manufacturing schedule constraints required an early decision. The WFPC-II correction was made for a conic constant of -1.0135, which was the best estimate at that time. Later the Hubble Independent Optics Review Panel (HIORP) determined the conic constant of the HST as-built PM is -1.0139. IRN 071

The OTA nominal and as-built optical prescription interface characteristics are defined below.

FORM	RITCHEY-CHRETIEN	
	DESIGN VALUES	AS-BUILT
Primary Mirror		
Radius	11040.000 mm	11041.7 ± 0.3 mm
Conic Constant	-0.0022985	-1.0139 ± 0.0003
Secondary Mirror		
Radius	1358.000 mm	1358.065 ± 0.025 mm
Conic Constant	-0.49686	-1.4960 ± 0.0001
Intervertex Distance[2]	4906.071 mm	4907.01 ± 0.01 mm
f/Number	24	24
Aperture	2400.000 mm	2400.000 mm
P.M. Vertex to Focus Distance[1]	1500.129 mm	1486.6 mm ± 1.01
Back Focal Distance	6406.200 mm	6393.61 mm
Magnification	10.435	10.438

IRN 071

LMSC RELEASED CONTROLLED

[1]Defined as the distance from the PM Vertex to station 198.44. The point of maximum encircled energy of the light beam, as shown in Figure 3.4-1a, is located 11.868 inches aft (-V1 direction) of the center of the Radial "A" mount point, at station 198.44. The as-built OTA paraxial focus is 13.5 ±1 mm

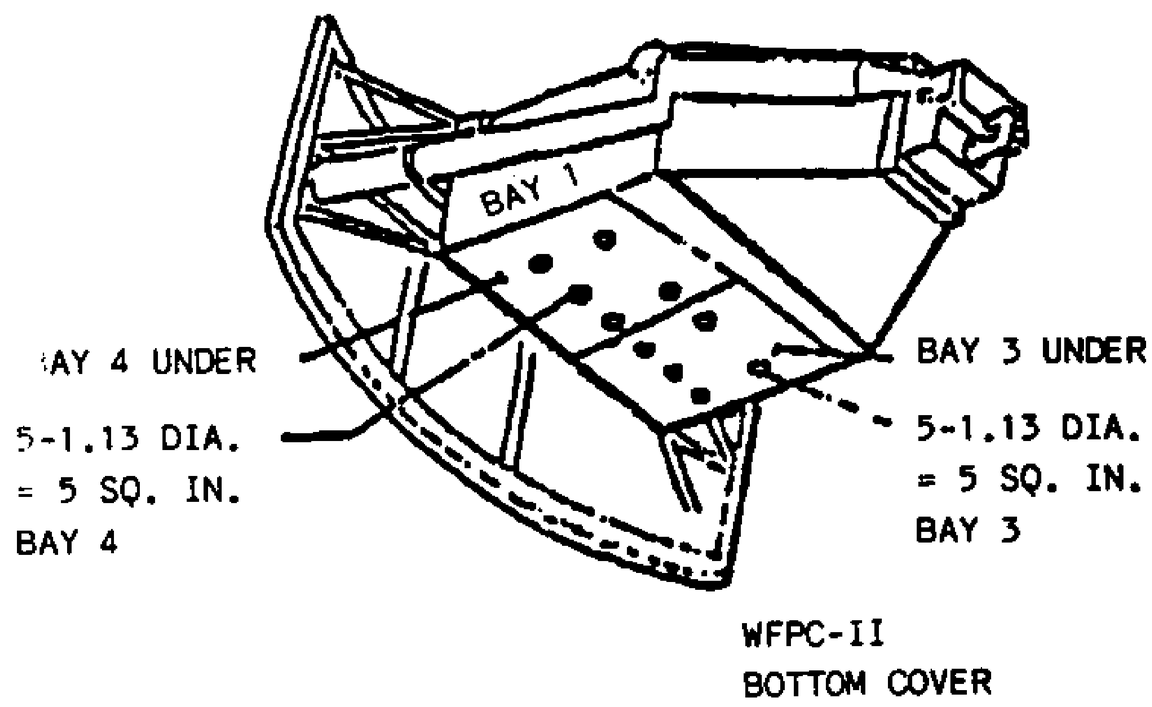

WFPC-II
BOTTOM COVER

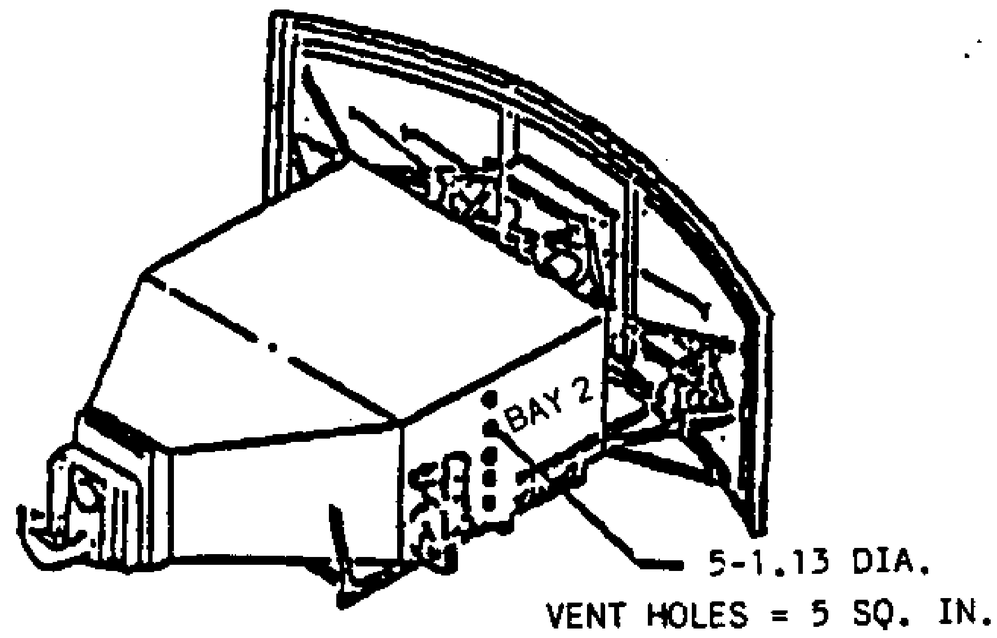

WFPC-II
BAY 2

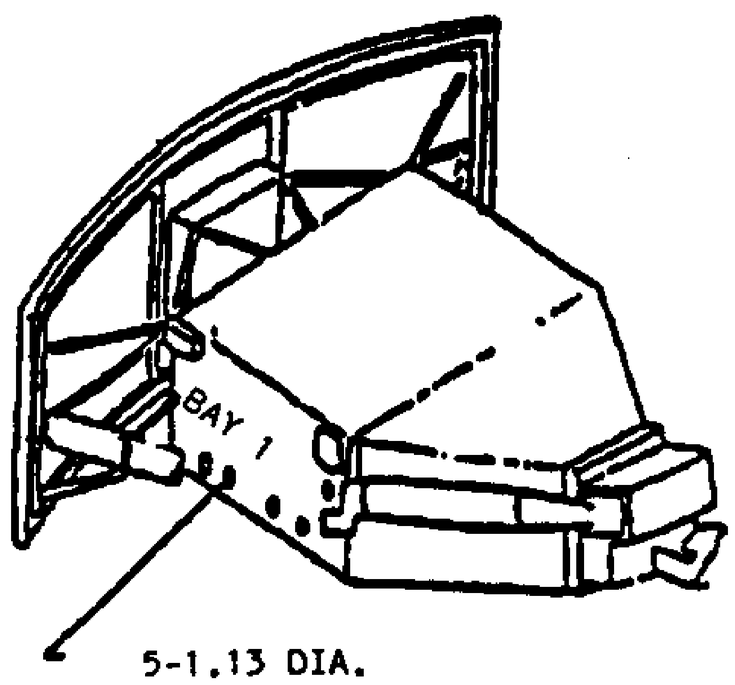

WFPC-II
BAY 1

Figure 3.3-19 WFPC Vent Configuration

LMSC
RELEASED
CONTROLLED

(New page created by 071)

3.4 Optical Interfaces. The as-built conic constant of the primary mirror (PM) was determined from the following: IRN 071, 076

1) Measurements of the null lens used to figure the PM
2) In orbit data from the FOC
3) In orbit data from the WFPC

Based on the above data, the Hubble Independent Optics Review Panel (HIORP) determined the conic constant of the HST as-built PM is -1.0139.

The OTA nominal and as-built optical prescription interface characteristics are defined below.

FORM	RITCHEY-CHRETIEN DESIGN VALUES	RITCHEY-CHRETIEN AS-BUILT (1σ)
Primary Mirror		
Radius (concave)	11040.000 mm	11041.7 ± 0.3 mm
Conic Constant	-1.0022985*	-1.0139 ± 0.00025
Secondary Mirror		
Radius (convex)	1358.000 mm	1358.065 ± 0.025 mm
Conic Constant	-1.49686*	-1.4960 ± 0.0001
Intervertex Distance[1]	4906.071 mm	4907.01 ± 0.005 mm
f/Number	24	24
Aperture Stop Diameter	2400.000 mm	2401.11 ± 0.14 mm
P.M. Vertex to Station 198.44[2]	1500.129 mm	1500.129 mm
Back Focal Distance (SM Vertex to Station 198.44)	6406.200 mm	6407.139 mm
Magnification	10.435	10.438

* Original ICD listed Epsilon (E) values of the conic constant (E = cc+1), where cc is the conic constant.

[1]The intervertex distance corresponds to the selected positioning of the secondary mirror as determined by the STScI based on data from the Radial SI. The secondary mirror will only be moved to maintain the intervertex distance by compensating for desorption in the graphite-epoxy structure of the OTA. IRN 076

[2]The OTA paraxial focus is 13.5 mm ± 0.5 mm (1σ) forward of station 198.44.

3.4.1 Optical Throughput. The OTA nominal spectral throughput is given in Figures 3.4-1b and 3.4-1c. IRN 071, 076

3.4.2 Pupil Properties. The OTA entrance pupil shape is as shown in Figure 3.4-1. There are three mechanical elements which limit the incoming beam as shown below. All values in this table are in inches.

Nominal Mech. Element Location	Nominal Image of Mech. Element	On-Orbit Mechanical Element Position Uncertainty Relative to Nominal		On-Orbit Mechanical Element Stability Relative to Nominal	
		Despace (3σ)	Decenter (3σ)	Despace (3σ)	Decenter (3σ)
Aperture Stop (OD 260.980*)	474.225*	±.022	±.022	±.002	±.002
(SM BAFFLE) (ID 409.250*)	476.434*	±.022	±.023	±.002	±.002
Mean Plane of SM Spiders (450.652*)	477.057*	±.022	±.023	±.002	±.002

* Station Number

IRN
071, 076

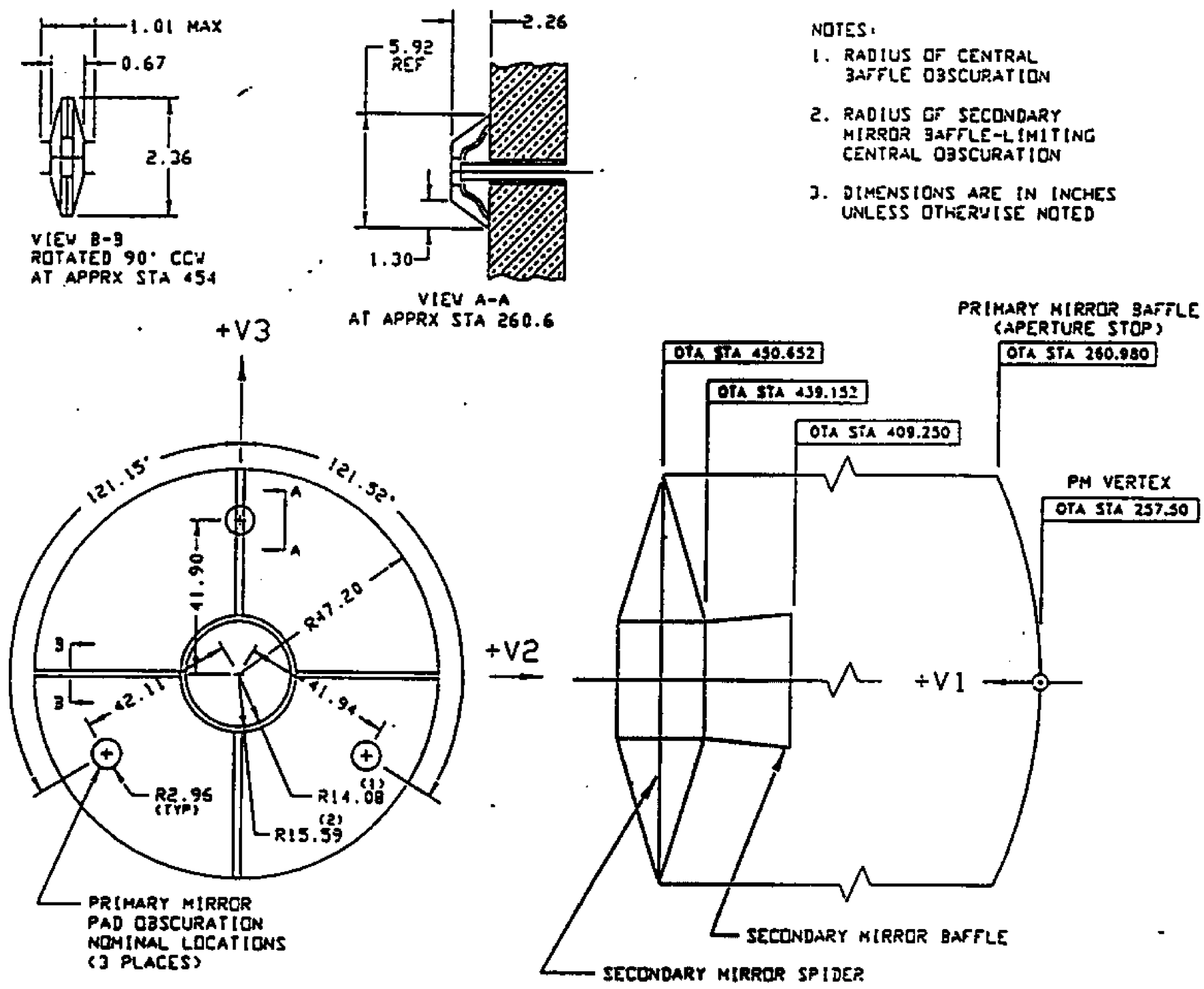

Figure 3.4-1 OTA Entrance Pupil

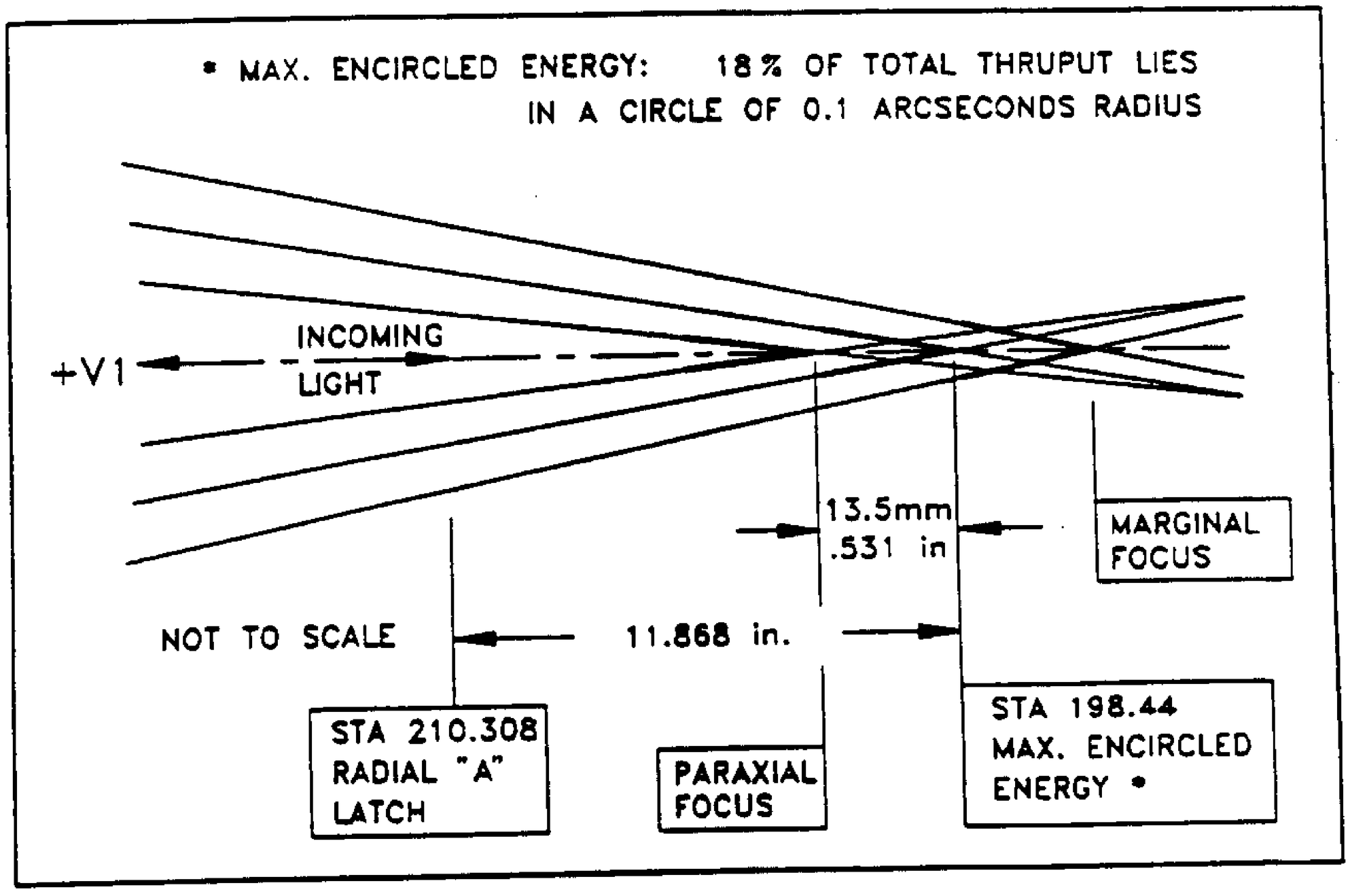

Figure 3.4-1a Position of Paraxial Focus & Max. Encircled Energy for the As-Built HST

(New page created by IRN 071)

LMSC RELEASED CONTROLLED

IRN 076

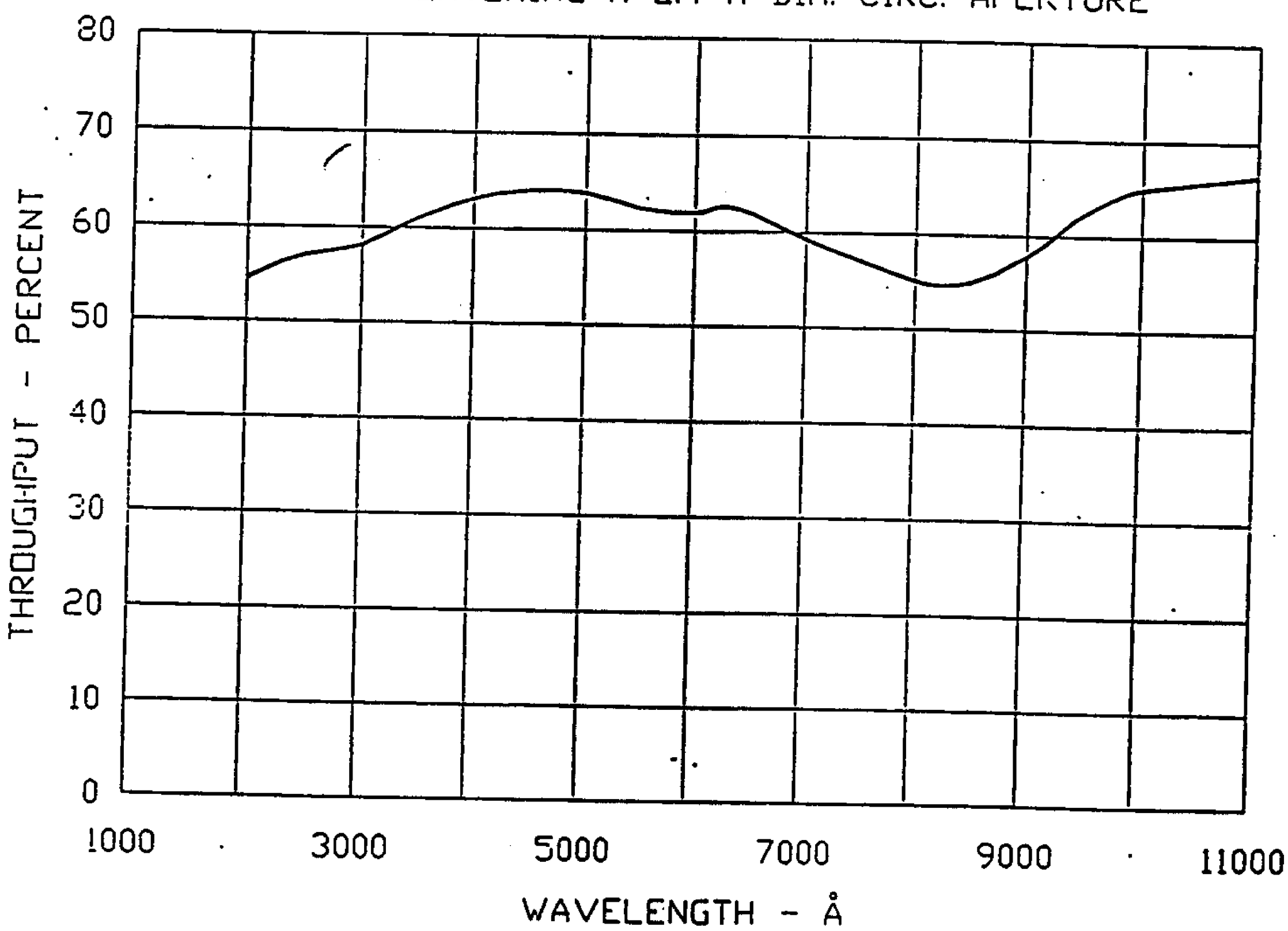

Figure 3.4-1b OTA Nominal Spectral Throughput (2000 - 11000 Å)

IRN 076

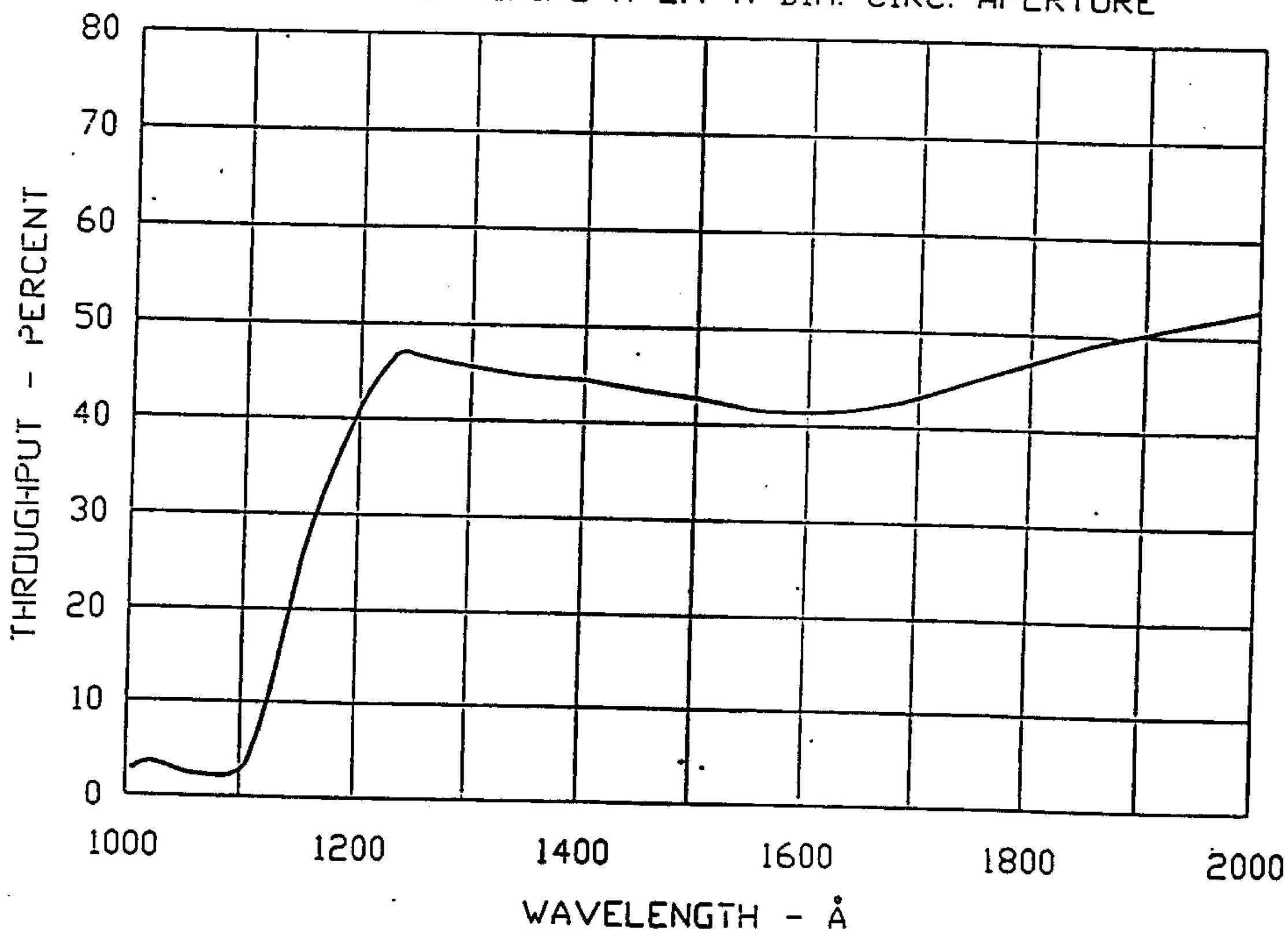

Figure 3.4-1c OTA Nominal Spectral Throughput (1000 - 2000 Å)

IRN 076

NOTE: THE ACTUAL VIGNETTED AREA IS ±15 mm ALONG +V3 AND ±V2 AND ±20 mm ALONG -V3 WITH A 143.4 mm FLAT ON -V3. HOWEVER, THE INTERCHANGEABILITY REQUIREMENT OF SECTION 4.2.2.1 REQUIRES THAT ALL AREAS BE CONSIDERED AS BEING ±20 mm WITH A 143.4 mm FLAT.

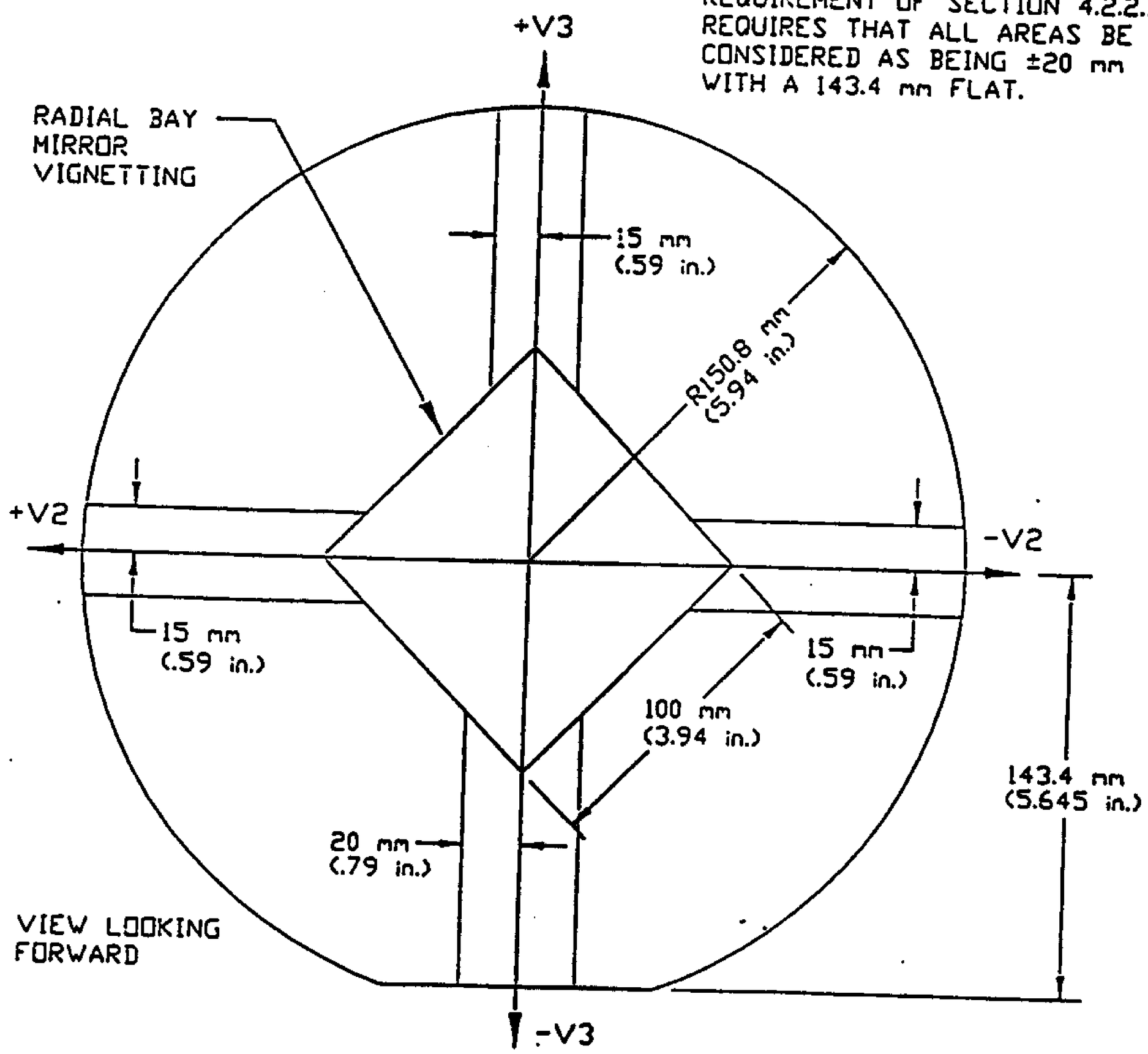

Figure 3.4-1d HST Focal Plane Format

3.4.3 Focal Plane Properties. The focal plane scientific data field format is shown in Figure 3.4-1d. The field curvatures for sagittal and tangential foci are within the envelopes shown in Fig. 3.4-2. The field curvature and astigmatism values are given in Fig. 3.4-3. IRN 076

3.4.4 Stray Light. OTA straylight from a full sunlit earth whose limb is no less than 70 degrees from the optical axis is no greater than one star of 23rd visual magnitude per square arc-second in the f/24 focal plane. The HST straylight design is shown in Figure 3.4-3a. IRN 076

Note that the center of the secondary mirror contains an area of 24 mm in diameter which was figured to be flat and extremely parallel to the back surface of the secondary mirror. A reticle was then etched on that surface to be used in the OTA alignment. The flat was coated with the same coating as the secondary mirror, AL (650 angstroms)/MgF2 (275 angstroms). For additional information refer to PE drawing 679-1873-005. The flat, which was used in the build and alignment of the OTA on the ground, reflects light sources or reflections in the focal plane area of the OTA.

3.4.4.1 Aft Shroud Light Leak Environment. The SSM aft shroud structure, with insulation installed, limits internal radiant energy from light leaks (exclusive of that entering the telescope aperture) to 10^{-5} watts/m^2 measured with an S-20 photocathode (approximately 10^{-3} lumens/m^2). This light level applies at the external surfaces of the SIs where they directly face the SSM structure.

3.4.4.2 Focal Plane Hub Straylight. DELETED. IRN 071, 076

3.4.4.3 Straylight Model. An APART straylight model in development for the HST project by BASD and Swales should be used in the design of all future SI's. IRN 071

3.4.4.4 Radial SI Calibration Lamp. The straylight emitted into the focal plane due to its calibration lamp is controlled by operational procedures to avoid possible interference with other instruments. IRN 071, 076

3.4.4.5 Secondary Mirror Straylight. The Secondary Mirror has a 24 mm diameter flat with scribe marks in the center of the mirror as shown in Figure 3.4-3b. IRN 071

3.4.5 Optical Input. The maximum area on the ST focal plane which may be vignetted by the radial SI pick up mirror is defined in Figure 3.4-3c. This view of the ST focal plane is located in the Gaussian focal plane of the OTA. The Gaussian focal plane is located 1486.6 mm behind the vertex of the Primary Mirror. IRN 076

3.4.6 SI Fold Mirror Envelope. IRN 071, 076

The maximum size of the aperture of the pick up mirror depends upon its distance from the Gaussian focal plane and its angle of tilt. Figure 3.4-4 defines the coordinate system and parameters which define the aperture size and shape of the pick up mirror. Figure 3.4-5 shows the general shape of the aperture of the pick up mirror.

IRN
071, 076

NOTES:

1. All interior surfaces painted using 3M 401-C10 flat black per Process Spec 679-1029
2. All interior surfaces painted using Chemglaze Z 306 per Process Spec 679-1074
3. Surface finish - Martin black, sides and edges
4. Surface finish - Diffuse black, R_D = 0.03 (3%), R_T = 0.04 (4%)

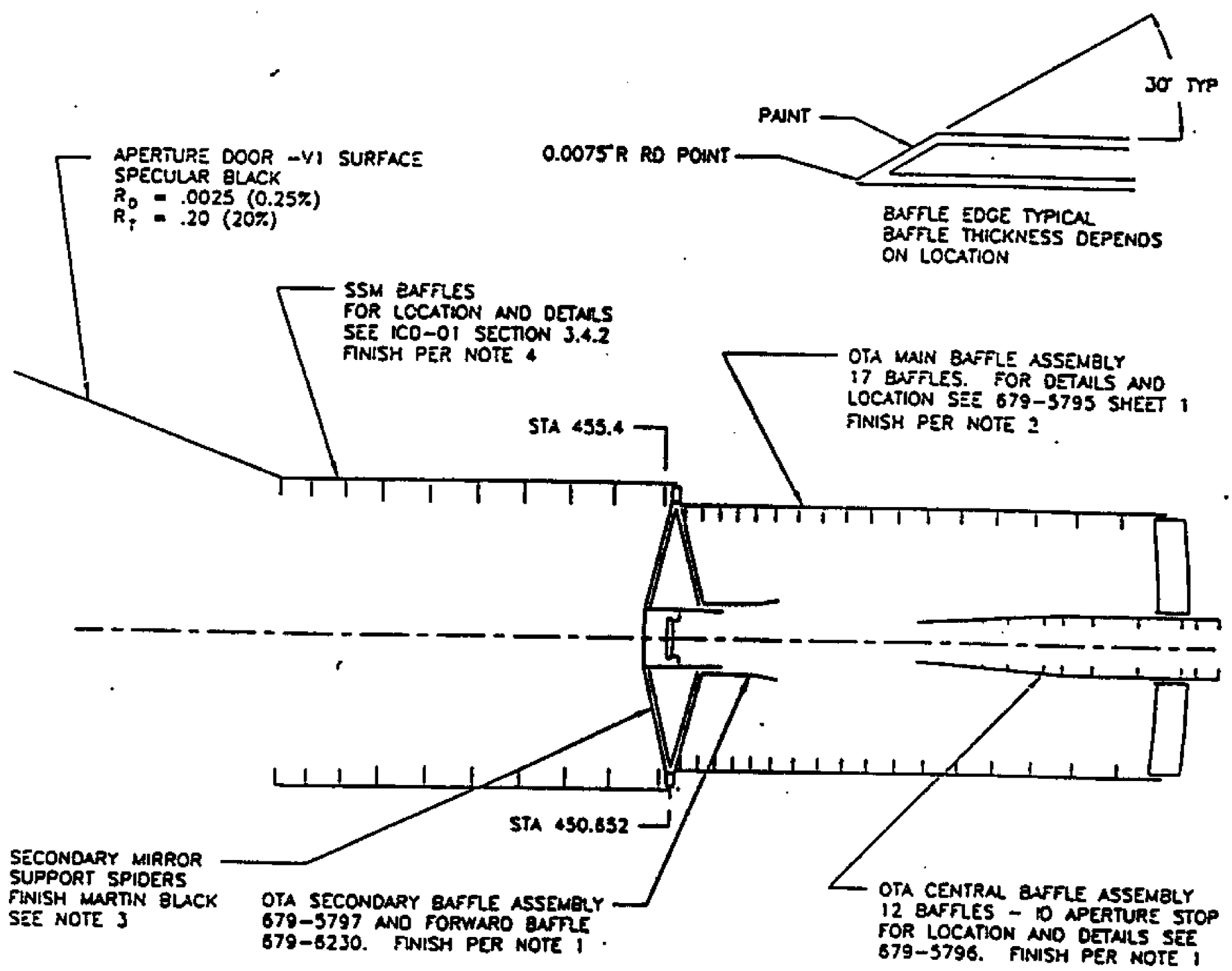

Figure 3.4-3a Space Telescope Straylight Design

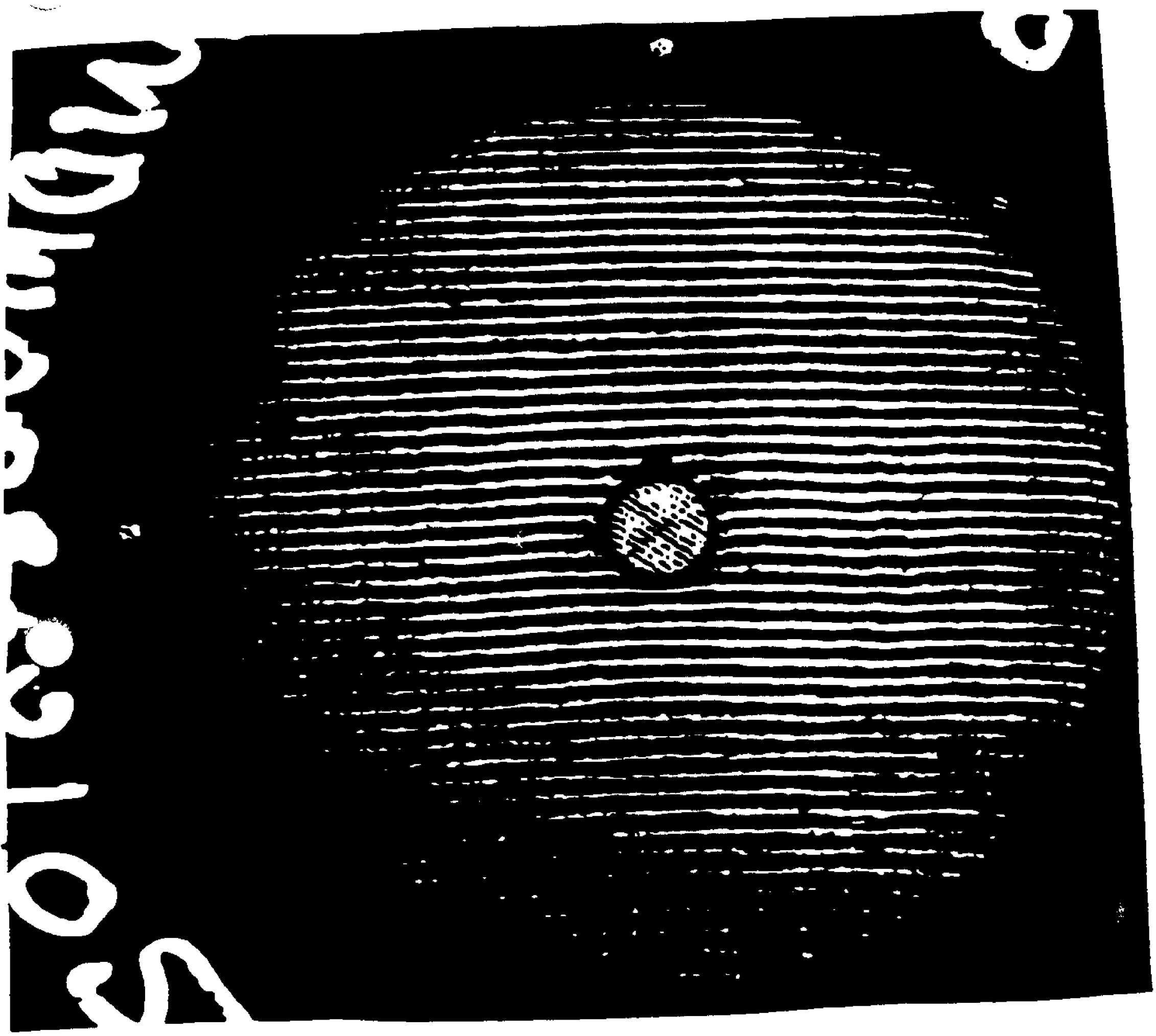

NOTE: 24 mm diameter flat with scribe marks in the center of the secondary mirror.

Figure 3.4-3b Hindle Shell Interferogram of the secondary mirror, Taken 31 August 1981.

RELEASE CONTROLLED

IRN 076

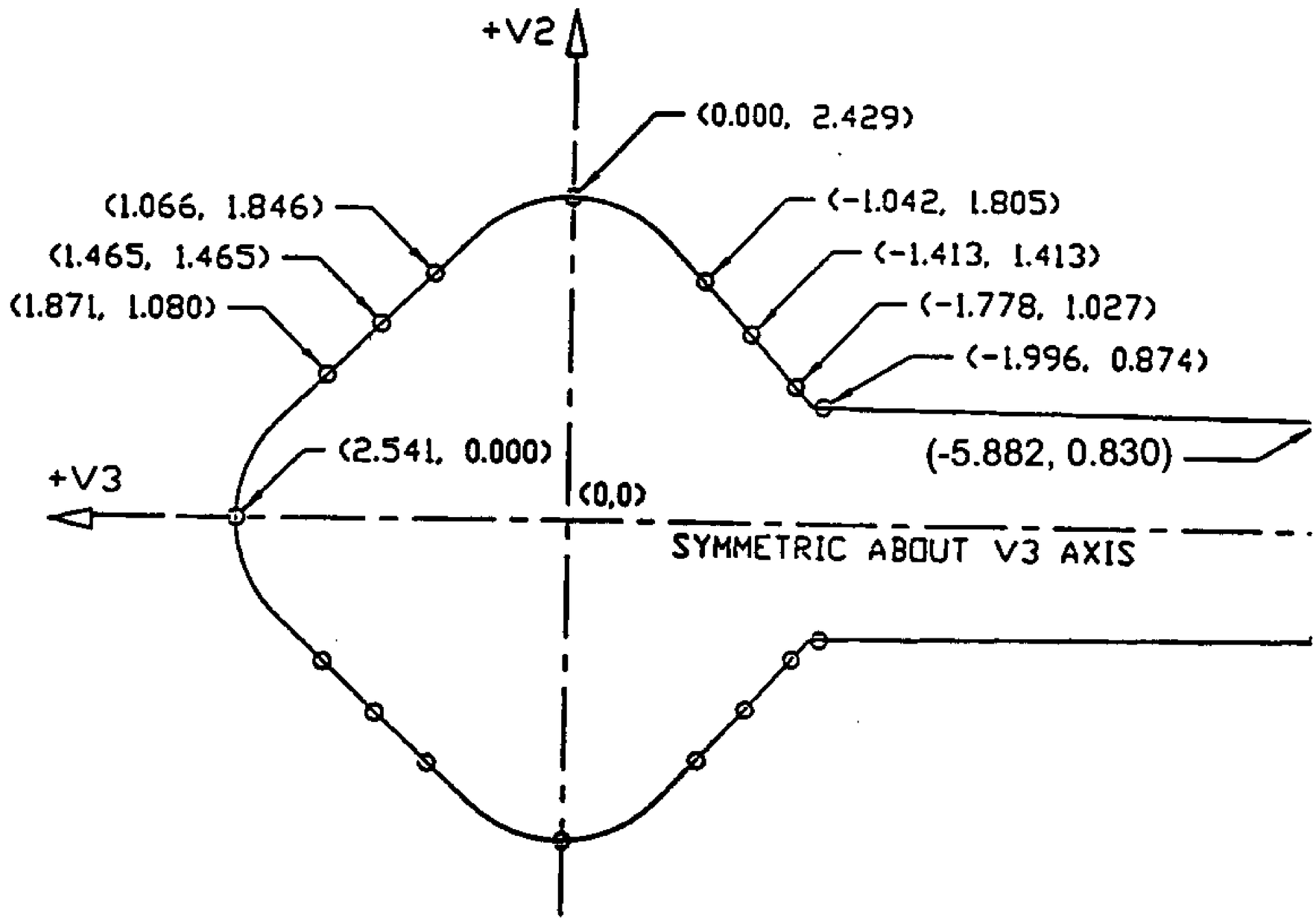

NOTE: ALL DIMENSIONS ARE IN INCHES.

Figure 3.4-3c 0% Vignetting of OTA Focal Plane for -V3 Arm

IRN 076

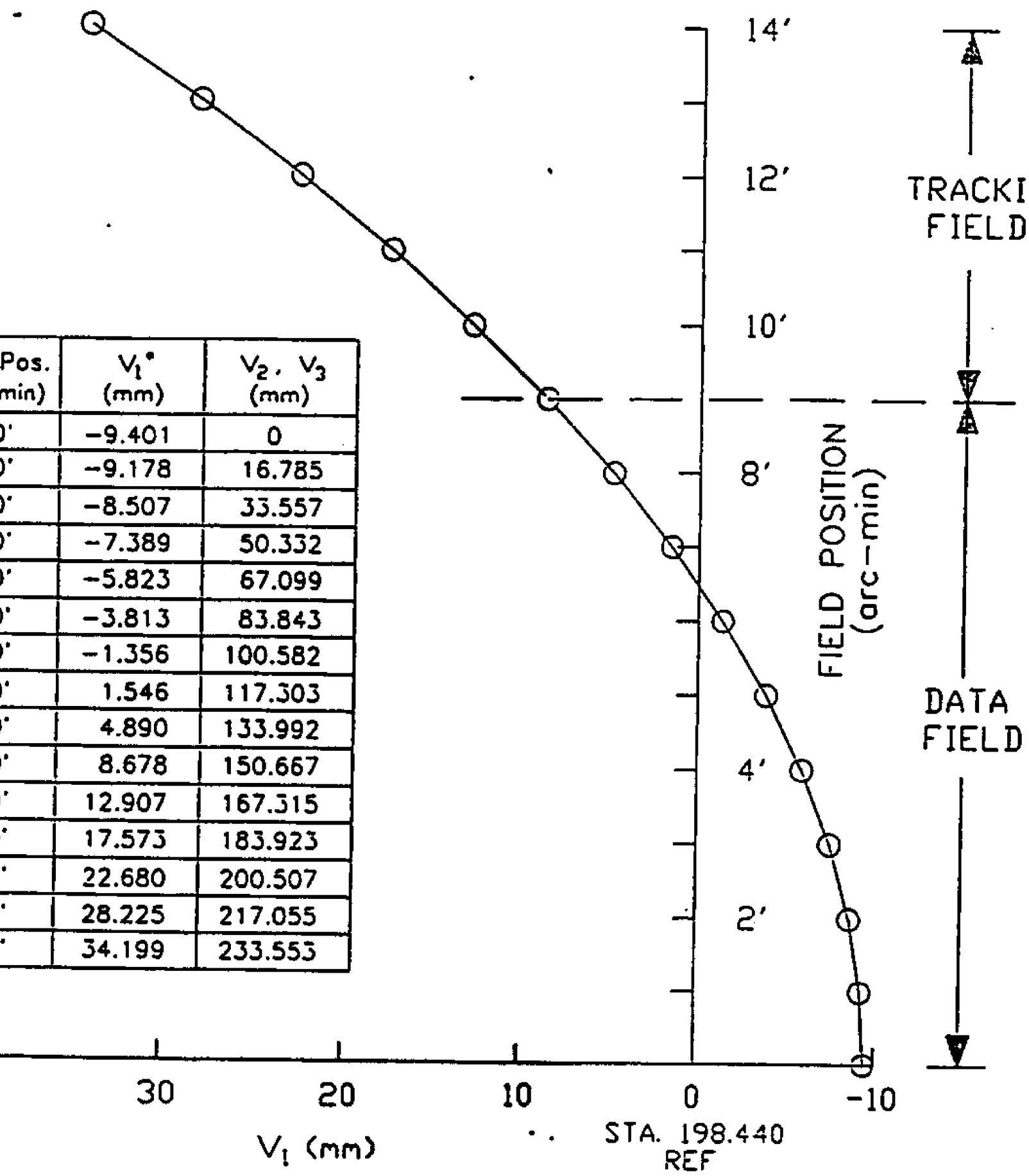

Field Pos. (arc-min)	V_1* (mm)	V_2, V_3 (mm)
0.0′	−9.401	0
1.0′	−9.178	16.785
2.0′	−8.507	33.557
3.0′	−7.389	50.332
4.0′	−5.823	67.099
5.0′	−3.813	83.843
6.0′	−1.356	100.582
7.0′	1.546	117.303
8.0′	4.890	133.992
9.0′	8.678	150.667
10.0′	12.907	167.315
11.0′	17.573	183.923
12.0′	22.680	200.507
13.0′	28.225	217.055
14.0′	34.199	233.553

*: THE V1 VALUES LISTED IN THIS TABLE ARE FOR THE BEST FOCUS OF EACH FIELD POSITION RELATIVE TO STA. 198.44. THE DEFINITION OF BEST FOCUS IS THE V1 LOCATION WHERE THE RMS WAVEFRONT ERROR IS MINIMIZED FOR A RAY BUNDLE WITH A 33% LINEAR CENTRAL OBSCURATION.

Figure 3.4-2 Field Curvature Characteristics

(Supersedes page 3.4-4 dated 29 June 1984)

FIELD POSITION (ARC MIN)	FIELD CURVATURE Delta Focus Location Relative to On-Axis Focus (V1 delta - mm)[1]	ASTIGMATISM (Sagittal Minus Tangential) Nominal Astigmatism (mm)[2]
0	0	.000
1	.223	.042
2	.894	.167
3	2.012	.376
4	3.578	.668
5	5.588	1.043
6	8.045	1.501
7	10.947	2.041
8	14.291	2.664
9	18.079	3.367
10	22.308	4.152
11	26.974	5.018
12	32.081	5.963
13	37.626	6.988
14	43.600	8.090

[1] The delta V1 values listed in the table are for the best focus of each field position relative to the on-axis location of best focus. The definition of best focus is the V1 location where the rms wavefront error is minimized for a ray bundle with a 33% linear central obscuration. IRN 076

[2] Astigmatism variation is ± 0.08 mm maximum about the nominal.

Figure 3.4-3 Field Curvature and Astigmatism

(Supersedes page 3.4-5 dated 29 June 1984)

Using the variables illustrated in Figures 3.4-4, 5, the design equations for the pick up mirror are:

$$L_1 = (X_t - X_o) / \text{sine}\ (\Theta m) \qquad \text{eq 1}$$

$$X_t = \frac{Y_o + X_o \text{ctn}\ (\Theta m)}{\tan\ (\delta_L) + \text{ctn}\ (\Theta m)} \qquad \text{eq 2}$$

$Y_o = 70.720$ mm

$\delta_L = 1.7713°$

X_o = the distance from station 198.44 to the point where the pick off mirror intersects the optical axis of the OTA. X_o is measured in millimeters.

Θm is the angle between the mirror and the OTA V3 direction. IRN 071

$$L_2 = -(X_b - X_o) / \text{sine}\ \Theta m) \qquad \text{eq 3}$$

$$X_b = \frac{-Y_o + X_o \text{ ctn}\ (\Theta m)}{\text{ctn}\ (\Theta m) - \tan\ (\delta_L)} \qquad \text{eq 4}$$

$$L_3 = Y_o - X_o \tan\ (\delta_L) \qquad \text{eq 5}$$

The unvignetted field of view given to the radial SI is approximately given by (see Figure 3.4-6).

$$L_R = L, \cos\ \Theta m - X_t \left[\frac{Xr - L, \cos\ \Theta m}{X_p - X_t}\right] \qquad \text{eq 6}$$

where X_r = radius of exit pupil = 145.896 mm
X_p = distance from exit pupil to station 198.44 = 7004.315 mm
and L_R, L_1, and X_t are in mm.

The accuracy of equation 6 is approximately 0.1 mm.

LMSC RELEASED CONTROLLED

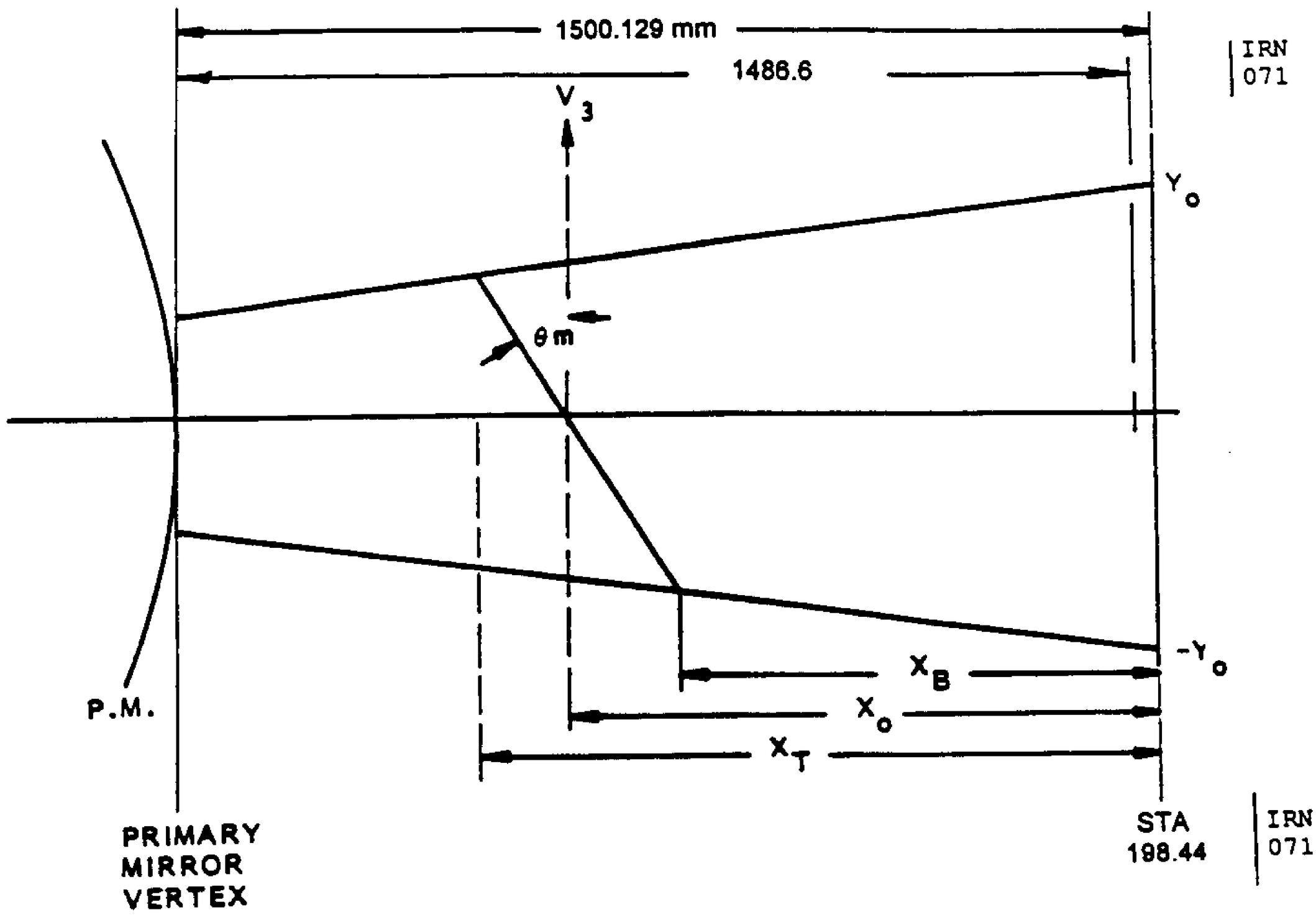

Figure 3.4-4 Optical Light Envelope Which Must Not Be Violated By Radial S1 Pick Up Mirror

LMSC RELEASED CONTROLLED

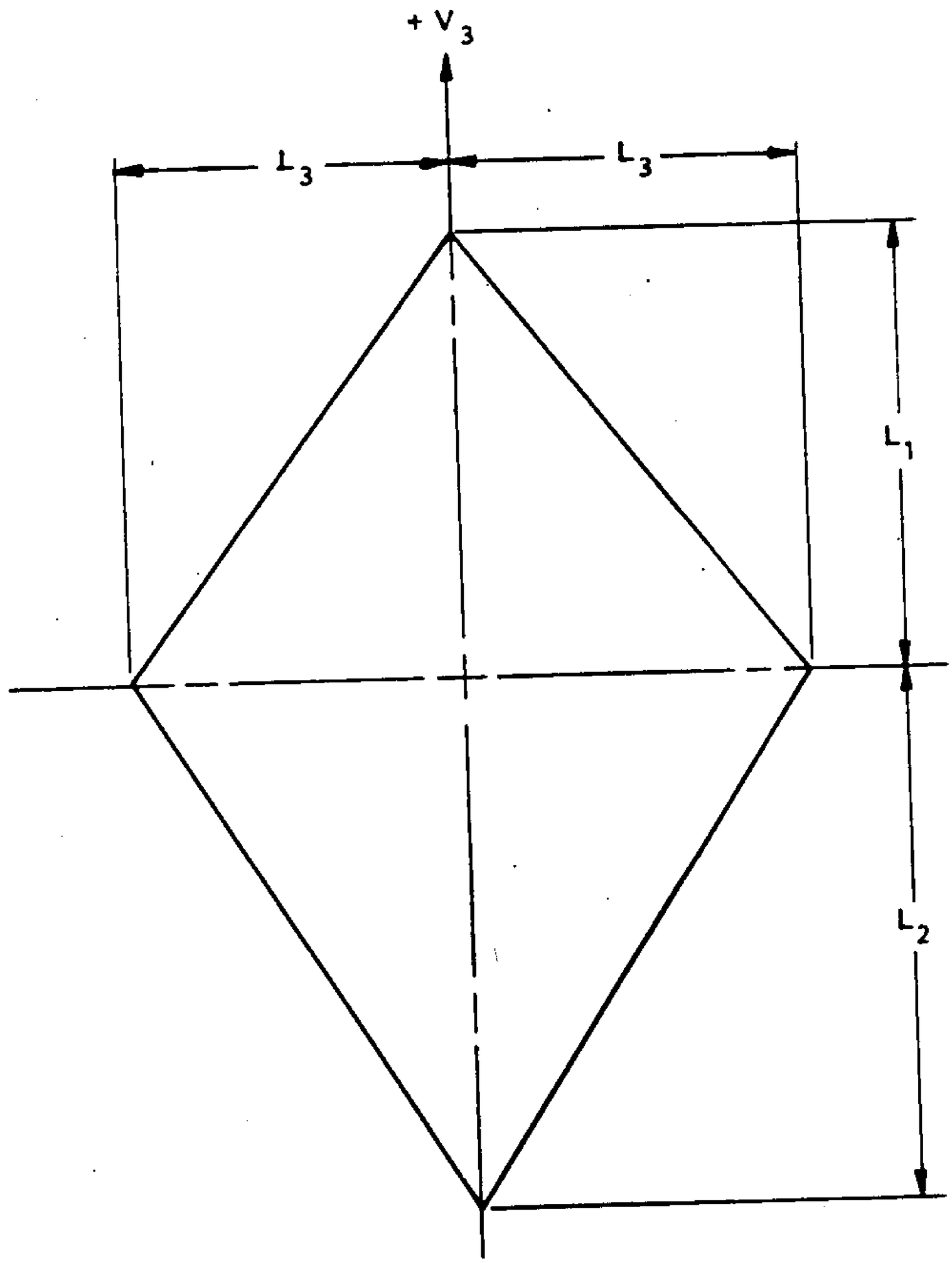

Figure 3.4-5 Radial SI Pick Up Mirror Envelope Viewed at Normal Incidence

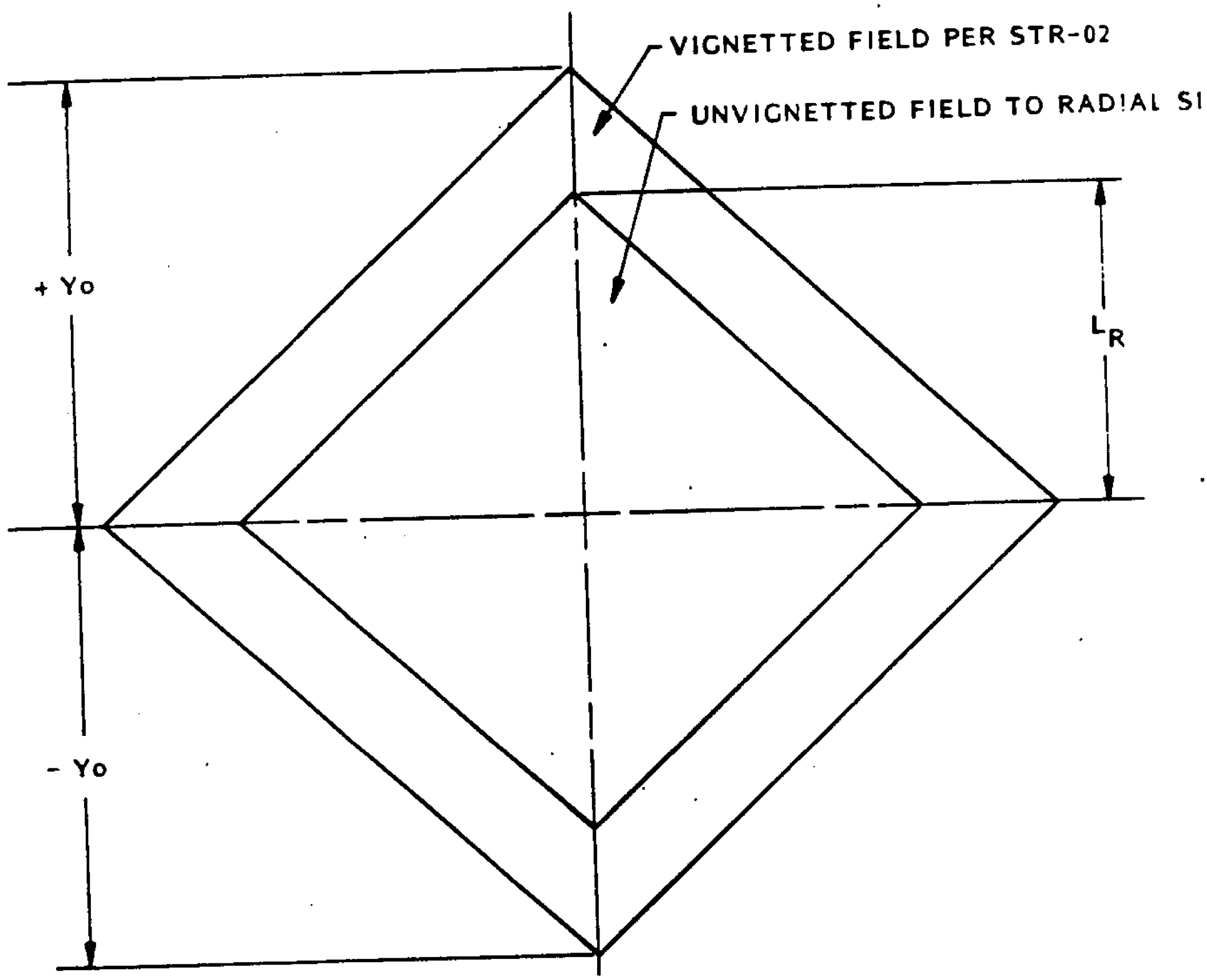

Figure 3.4-6 Unvignetted Field of View Radial SI (At Projected OTA Focal Plane)

EXAMPLE:

The location of the radial SI pick off mirror along V1 is at station 223.308. The optical axis of the radial SI is at an angle of 94° with the optical axis of the OTA. The focal plane is at station 198.44, therefore X_o = 24.868 inches or 631.647 mm, and θm = 47°.

X_o = 631.647 mm

X_t = 684.775 IRN 071

L_1 = 72.652 mm

X_b = 574.878 mm

L_2 = 77.634 mm

L_3 = 51.191 mm

L_R = 39.102 mm

LMSC RELEASED CONTROLLED

3.5 Structural Interface

3.5.1 Loads. The SI is to operate within specifications after exposure to the ground, launch, ascent, and 6 fps landing loads.

For a maintenance mission the loads environment of the SI are no greater than for initial launch, ascent, and landing in the ST.

3.5.1.1 Ground Handling Loads. The ground handling limit loads are 2g's applied at the c.g. and act in any direction.

During 1-g installation of the SI into either the ST or the SIPE, loads no greater than the loads experienced during in-orbit radial SI changeout operations are experienced by the SI mounted guiderails. IRN 071

3.5.1.2 SI Latching Loads. Not applicable

3.5.1.3 Ground Transportation Loads. While installed in either the ST or the SIPE, the SI experiences loads no greater than those given in paragraphs 3.5.1.4 and 3.5.1.7. IRN 071

3.5.1.4 Liftoff and Landing Overall Load Factors. The SI liftoff and 6 fps limit landing load factors for the SI are given in Table 3.5-1. These load factors act through the SI c.g. and must be multiplied by an applicable factor of safety to use for design analysis.

The WFC3 liftoff and 9.6 fps limit landing load factors, while mounted on SSE, are given in Table 3.5-2. These load factors act through the WFC3 center of gravity and must be multiplied by an applicable factor of safety to use for design analysis. IRN 080

3.5.1.4.1 Light Baffle Loads. The maximum total contact load between the Light Baffle and the SI, during ascent and descent, is 100 pounds. The limit load is distributed around the perimeter of the baffle such that the maximum load over one linear foot of each flexible baffle finger is less than or equal to 1.25 pounds. This limit load per running foot may be applied over any fraction of the total length, for evaluation of possible critical load combinations. The load is applied in any direction whereby the baffle fingers are deflected. There is no load between the Baffle and the SI on orbit.

3.5.1.5 Emergency Landing Overall Load Factors. The SI is to survive the emergency loads given in Table 3.5-1. These loads act through the SI c.g.

WFC3, while mounted on SSE, is to survive the emergency loads given in Table 3.5-2. These loads act through the WFC3 center of gravity. IRN 080

TABLE 3.5-1
LOAD FACTORS (g's) FOR RADIAL SCIENTIFIC INSTRUMENT

Loading Cond.	(V1)	(V2)	(V3)	Notes
Liftoff	±6.23	±2.1	±3.2	1, 2
Landing (6 Fps)	±3.6	±0.8	±3.0	1, 2
Emergency Land	-4.5 +1.5	±1.5	-4.5 +2.0	3,4,5

Admin. Changes

Notes-

1. Factors are for limit loads and are multiplied by a factor of safety to obtain ultimate loads.
2. Factors V_1, V_2, and V_3 act simultaneously.
3. All loads are ultimate.
4. Loads are directed aftward, V_1, within a 20° half cone angle.
5. The load factors operate separately in each direction.

Admin. Changes

TABLE 3.5-2
LOAD FACTORS (g's) FOR WFC3 MOUNTED ON SSE

IRN 080

Event	V1	V2	V3	RSS	Notes
Liftoff	+/- 3.3	+/- 0.6	+/- 2.6	4.24	1,2
Landing	+/- 1.3	+/- 1.2	+/- 4.2	4.56	1,2
Emergency Landing	-4.5/+1.5	1.5	-4.5/+2.0	N/A	3,4,5

Notes-

1. Factors are for limit loads and are multiplied by a factor of safety to obtain ultimate loads.
2. Factors V_1, V_2 and V_3 act simultaneously.
3. All loads are ultimate.
4. Loads are directed aftward, V_1, within a 20-degree half cone angle.
5. The load factors operate separately in each direction.

3.5.1.6 Random Mechanical Vibration. Random mechanical vibration levels at the registration interface (points A, B & C) are given in Fig. 3.5-1, and apply only to components coupled directly to these points. IRN 071

3.5.1.7 Acoustic Loads. The acoustic levels for the SI at the radiator area and within the interior of the aft shroud are given in Fig. 3.5-2.

3.5.1.8 In-Orbit Loads. For general in-orbit maintenance operations, the following loads and conditions apply.

3.5.1.8.1 Maximum EV Crewmember Loads on Handholds and Equipment Tethers. The radiator handhold and the equipment tether mounting surfaces are designed to withstand an imposed load of 300 lbs (ultimate) in any direction simultaneously with an applied moment of 75 ft lbs about any axis at the handhold and equipment tether mounting pad interface. IRN 071

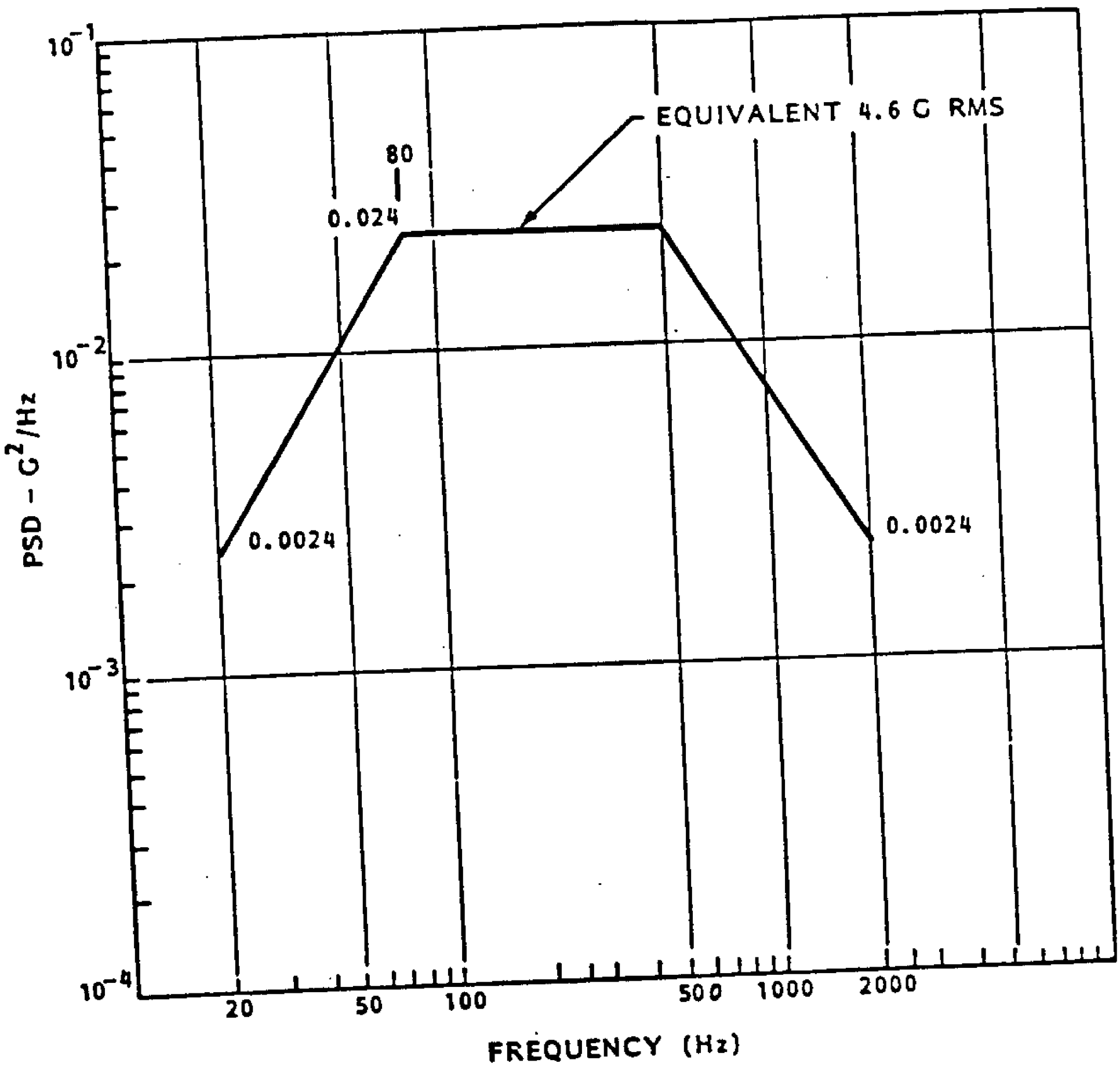

Figure 3.5-1 Mechanical Random Vibration at OTA/SI Interface

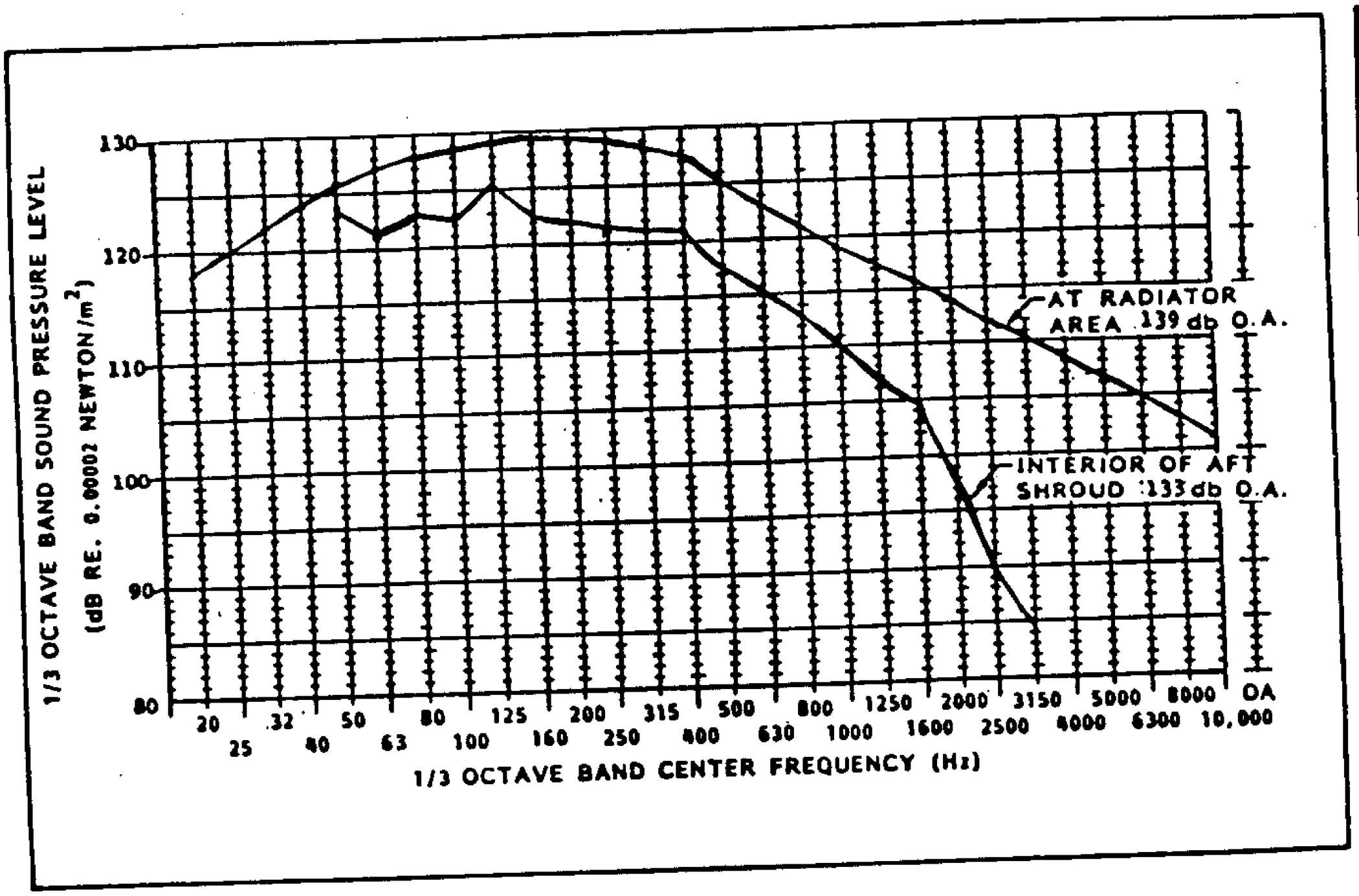

IRN 50

Figure 3.5-2 Radial SI Acoustic Levels During Ascent

(Supersedes pg. 3.5-4 dated 29 June 1984)

3.5.1.8.2 Guiderail Loads. During SI in-orbit changeout, the guiderails attached to the SI can be subjected to an inadvertent crewmember imposed load of 100 lbs (limit). IRN 043

3.5.1.8.3 SSE Equipment Tether Attachment Provision Loads. Design limit loads at interface: 200 lbs either direction in any of three axes; simultaneous with a 480 ft lbs moment in any plane about point T in Figure 3.3-12. IRN 071

3.5.1.8.4 Flight Pick-Off Mirror Cover and +V2, -V2 Handrail Loads. The flight pick-off mirror cover and the +V2, -V2 handrails shall be designed only to withstand an inadvertent maximum bump load of 100 pounds in any direction.

3.5.2 Structural Characteristics. The optical bench and exo-structure lateral stiffness is such that the generalized mass of the first two lateral modes taken individually fall below and to the right of the curve of 3.5-3. Generalized mass is defined as follows:

$$\bar{M} = \{\phi\}^T \; [M] \; \{\phi\} \; , \; \phi_{imax} = 1$$

$\{\phi\}$ = eigenvector of a given mode

$[M]$ = mass matrix of a discretized structural model

T = Superscript indicates a transposed matrix

Where the first mode is predominantly torsion (coupled in the two lateral directions) the generalized mass is defined as follows:

$$\bar{M} = \sum_i M_i \; (\phi^2_{iV2} + \phi^2_{iV3})$$

where ϕ_{iV2} and ϕ_{iV3} are the eigenvectors of the ith mass point for the nth mode (in this case the first mode) in the V2 and V3 directions. The requirements of Figure 3.5-3 apply.

Vibration modes are calculated neglecting flexibility in the latching mechanism.

LMSC RELEASED CONTROLLED

3.5.1.8.2 Guiderail Loads. During SI in-orbit changeout, the guiderails attached to the SI can be subjected to an inadvertent crewmember imposed load of 100 lbs (limit). IRN 43

3.5.1.8.3 SSE Attachment Provision Loads. Design limit loads at interface: 200 lbs either direction in any of three axes; simultaneous with a 480 ft lbs moment in any plane about point D in Figure 3.3-12.

3.5.2 Structural Characteristics. The optical bench and exo-structure lateral stiffness is such that the generalized mass of the first two lateral modes taken individually fall below and to the right of the curve of 3.5-3. Generalized mass is defined as follows:

$$\bar{M} = \{\phi\}^T \; [M] \; \{\phi\} \; , \; \phi_{imax} = 1$$

$\{\phi\}$ = eigenvector of a given mode
$[M]$ = mass matrix of a discretized structural model
T = Superscript indicates a transposed matrix

Where the first mode is predominantly torsion (coupled in the two lateral directions) the generalized mass is defined as follows:

$$\bar{M} = \sum_i M_i \; (\phi^2_{iV2} + \phi^2_{iV3})$$

where ϕ_{iV2} and ϕ_{iV3} are the eigenvectors of the ith mass point for the nth mode (in this case the first mode) in the V2 and V3 directions. The requirements of Figure 3.5-3 apply.

Vibration modes are calculated neglecting flexibility in the latching mechanism.

(Supersedes pg. 3.5-5 dated 29 June 1984)

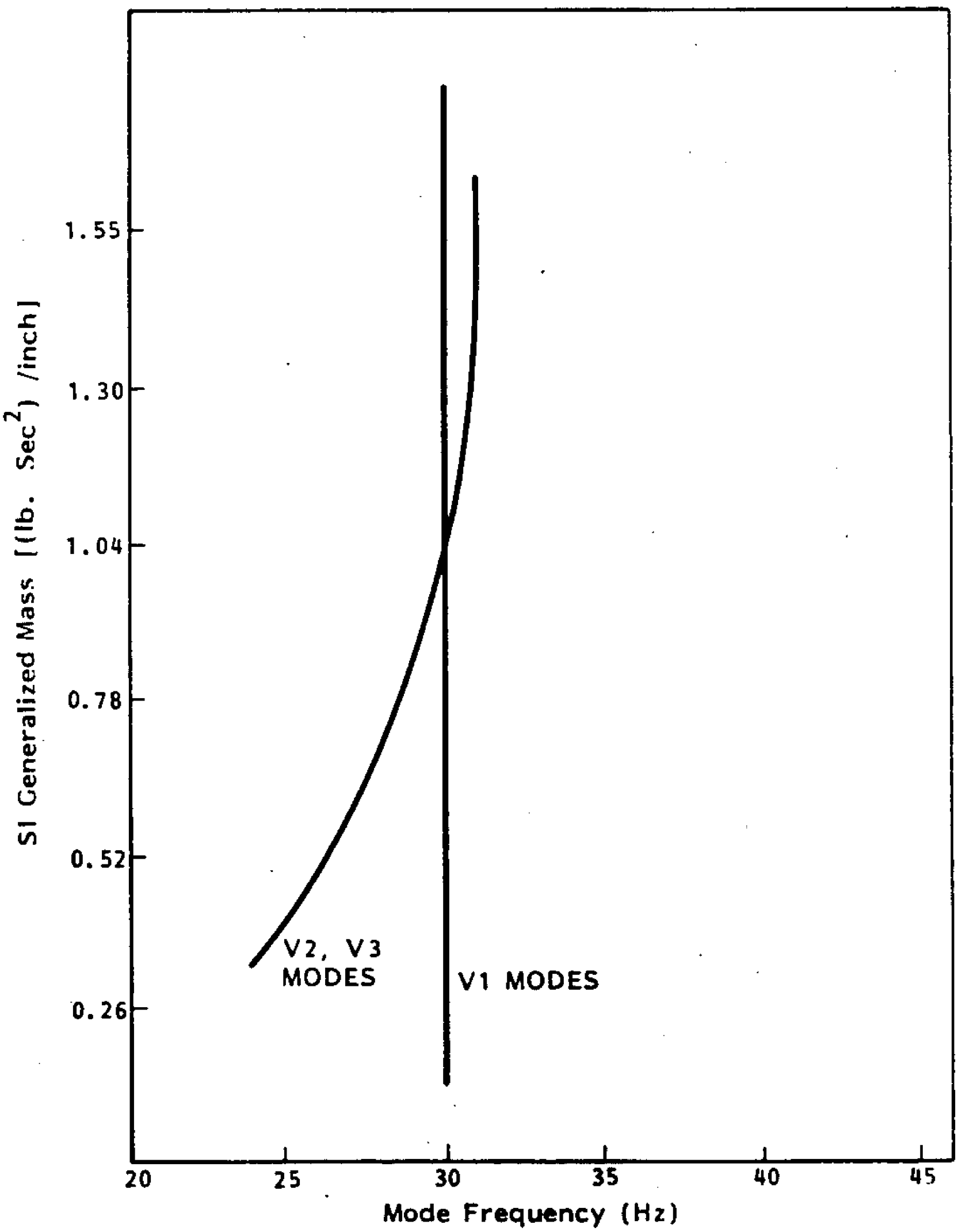

Figure 3.5-3 SI Generalized Mass vs Mode Frequency

3.5.3 Mass Properties

3.5.3.1 Weight of WFPC-I. the maximum weight of the Radial SI including the 16 lb. light baffle mounted to the external radiator is 570 lbs. The weight of the SI is determined to within ± 5 lbs. prior to installation into HST. The weight of OTA supplied hardware items which are not included within the SI weight budget but which are accounted for in the SI mass properties reporting is: IRN 056

Connectors (4 total) (includes ground strap)	.7 lbs.
Connector plate & rod assembly	5.5 lbs.
Mount Point A (Ref: Fig. 3.3-3)	3.5 lbs.
Mount Point B (Ref: Fig 3.3-4) 2 @ 7.5 lbs.	15.0 lbs.
Latch mechanism assembly	3.0 lbs.
Guiderails 2 @ 1.30 lbs.	2.6 lbs.
Purge Fitting (LMSC supplied)	0.2 lbs.
Tether Bracket (LMSC supplied)	0.3 lbs.

IRN 071

3.5.3.2 Weight of WFPC-II and Follow On ORIs. The as-delivered weight of WFPC-II and follow on ORIs (including Flight SSE Pick-off Mirror Cover, radiator handhold studs, and all GFE) prior to installation in the SIPE is not to exceed 626 lbs. The weight of the SI is determined to within ± 5 lbs by the SI contractor. Included in the 626 lb. weight are the following items of government supplied hardware which must be accounted for in the SI mass properties reporting:

Connectors (4 total) (includes ground strap)	.7 lbs.
Connector plate & rod assembly	5.5
Mount Point A (Ref: Fig 3.3-3)	3.5
Mount Point B/C (Ref: Fig. 3.3-4) 2 @ 7.5 lbs.	15.0
Latch Mechanism Assembly	3.0
Guiderails 2 @ 1.30 lbs.	2.6
Purge Fitting	0.2
Tether Bracket	0.3
Radiator Handhold Studs	1.4

LMSC RELEASED CONTROLLED

3.5.3.3 Center of Gravity. The Radial SI c.g., including all GFE items, is within the volume defined by the coordinates:

IRN 048, 071

		WFPC-I	WFPC-II & Follow on ORIs
V3	=	-51.0 ±1 inches	-49.3 ±1 inches
V2	=	+ 0.1 ±1 inches	- 0.5 ±1 inches
V1	=	+218.9 ±1 inches	+218.6 ±1 inches

The location of the c.g. for the SI is determined and marked on the ± V1 surfaces to within ± 1.0 inches of true location prior to installation within the HST or the SIPE. The c.g. marking is "⊕ CG" with block letters 1 inch high and a 1 inch diameter symbol.

LMSC RELEASED CONTROLLED

(New page created by IRN 071)

3.6 Environmental Interface. The SI environmental conditions of thermal, light leak, magnetics, contamination, ionized particle radiation, meteoroid, SSM internal pressure and humidity are specified below.

3.6.1 Thermal Interfaces.

3.6.1.1 Operational Thermal Interface. The thermal environment for in-orbit ST science mission operation is controlled by a balance between the heat generated by the combined OTA/SSM and SIs, and the heat radiated to space, either by direct radiation from the radial SI external radiator, or by radiation internal to the SSM shroud, (reference ST/SE-24 Section E.) The Radial SI requires internal and external radiators. The external radiators' heat sink is the orbit environment. The internal radiator is located on the Radial SI housing, viewing the inside of the OTA and the SSM. Admin Chang

3.6.1.1.1 Mount Point Conductance. At each of the three attachment points (A, B, C in Figure 3.3-1) the following conditions are maintained during science orbital operations:

a. The temperature at the OTA side of each attachment fitting is within the range 21°C ± 1°C.

b. The maximum effective thermal conductance of each attachment fitting as provided by the OTA is 0.050W/°C.

c. The temperature of the SI surface to which each OTA attachment fitting is mounted is within the range -20°C to 20°C, and the variation during a single exposure (or 24 hours, whichever is less) is a maximum of 1°C. IRN 45

3.6.1.1.2 Electrical Cable and Ground Strap Conductance. Cable conductance (K) does not exceed 0.1 watt/°C where heat loss (Q) is defined as:

$$Q = K (T_{SI} - \bar{T})$$

T_{SI} = SI temperature at the cable attach point

$\bar{T} = (T_{SI} + T_{sink})/2$

T_{sink} = SSM effective radiation sink temperature (-14°C max to -40°C)

Definition of ground strap effective thermal conductance is 0.1W/°C maximum. Steady state ground strap interface temperature is -35°C to -57°C.

3.6.1.1.3 Internal Radiative Heat Transfer. The radial SI has an internal view of the OTA Focal Plane Structure, the SSM aft shroud interior, SSM equipment platform, the FGS and the axial SI's.

3.6.1.1.3.1 SI Surface Temperature and Properties. The SI temperature and surface properties within the aft shroud are as specified on Figure 3.6-1.

3.6.1.1.3.2 Focal Plane Structure. The effective sink temperatures for the pick-off mirror and arm are given in Figure 3.6-2. IRN 70

3.6.1.1.3.3 SSM Aft Shroud Effective Sink Temperatures. The radiative heat transfer environment in the SSM aft shroud compartment is defined in terms of "effective sink temperatures" which combine the various thermal contributions into a single parameter which represents the temperature of a uniform thermal sink (black surface) to which the SI internal radiator emits the same radiative flux (Q) at the same radiator temperature (T). The effective sink temperature (T_{SINK}) for the internal SI radiator is defined by the relationship:

LMSC RELEASED CONTROLLED

$$Q = \varepsilon \sigma A (T^4 - T^4_{SINK})$$

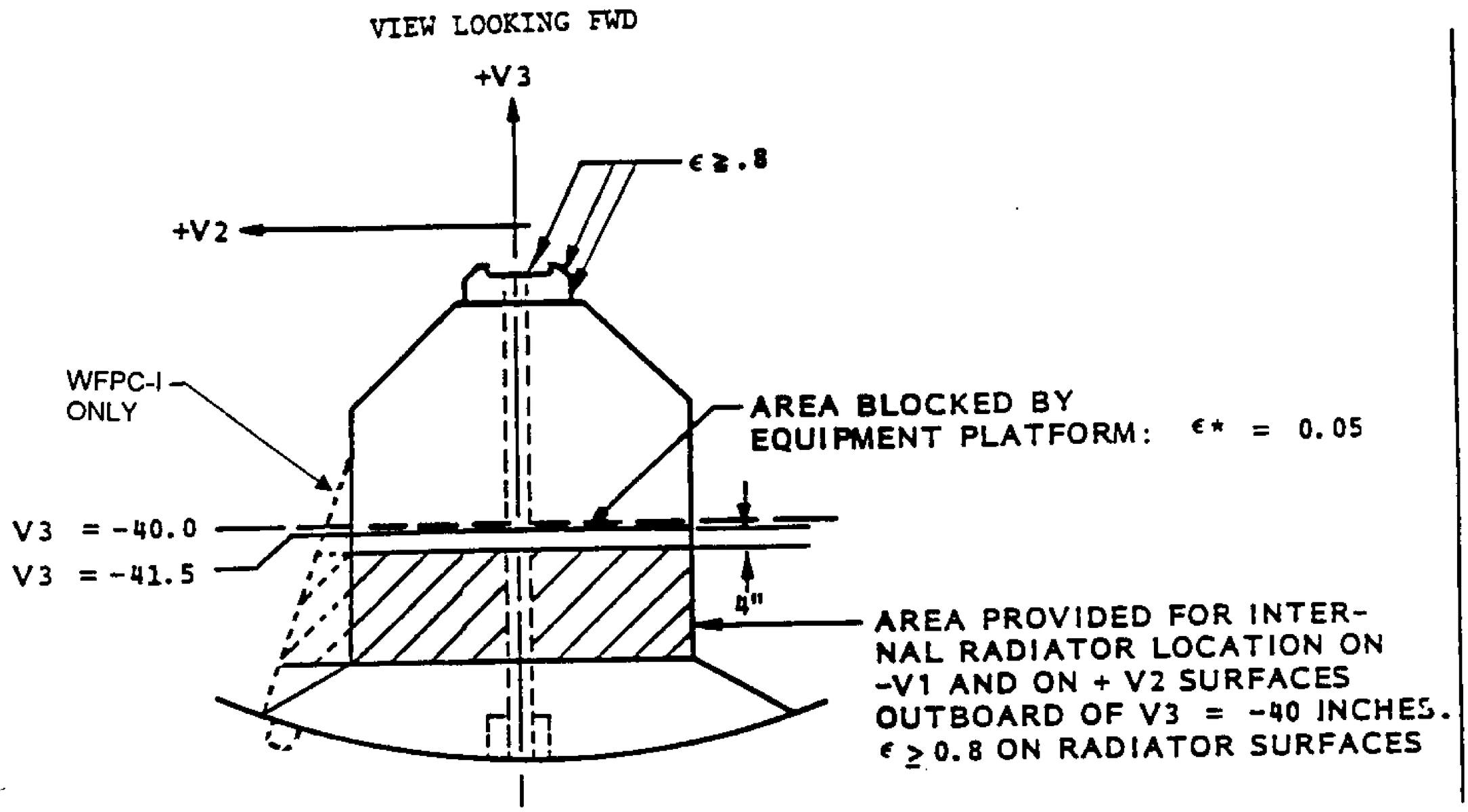

IRN 054, 071

NOTE:

1. All SI surfaces excluding radiators external surfaces have an $\alpha \geq 0.8$ an effective $\epsilon^* \leq 0.01$ and a structural operating temperature range of -20°C to +20°C.
2. The surface temperature of each internal radiator during operation is -20°C minimum to +20°C maximum.
3. Total power radiated internal to the aft shroud is limited to 45 watts maximum during hot orbits and 60 watts max during cold orbits. IRN 071

Figure 3.6-1 SI Surface Temperature and Thermal Interface Surface Properties Characteristics Located Within the Aft Shroud

(Supersedes page 3.6-3 dated 17 March 1986)

LMSC RELEASED CONTROLLED

WFPC PICKOFF SINK TEMPS (°C) / COSTAR IN THE HUB

LOCATION/NODE	HOT	COLD
PICKOFF ARM		
70257	17	8
70258	16	6
70259	15	7
70260	15	7
70261	17	9
70262	17	10
70263	18	12
70264	15	8
70265	16	9
70266	17	11
70267	17	11
70268	17	11
70269	17	11
70270	17	11
70271	17	11
70272	17	11
70273	18	13
70274	18	12
70275	17	11
70282	18	13
70283	17	12
70284	17	11

LOCATION/NODE	HOT	COLD
PICKOFF MIRROR		
70285	15	7
70286	15	7
70287	14	7
70288	15	7
70289	14	7
70290	14	6
70291	14	7
70292	14	6
70293	14	6
BACKSIDE OF MIRROR		
70295	18	13

Notes:

1. Surface in ( ) denotes opposite side
2. Max rate of change is ≤1°C/hr
3. Average over orbit

IRN 70

LMSC RELEASED CONTROLLED

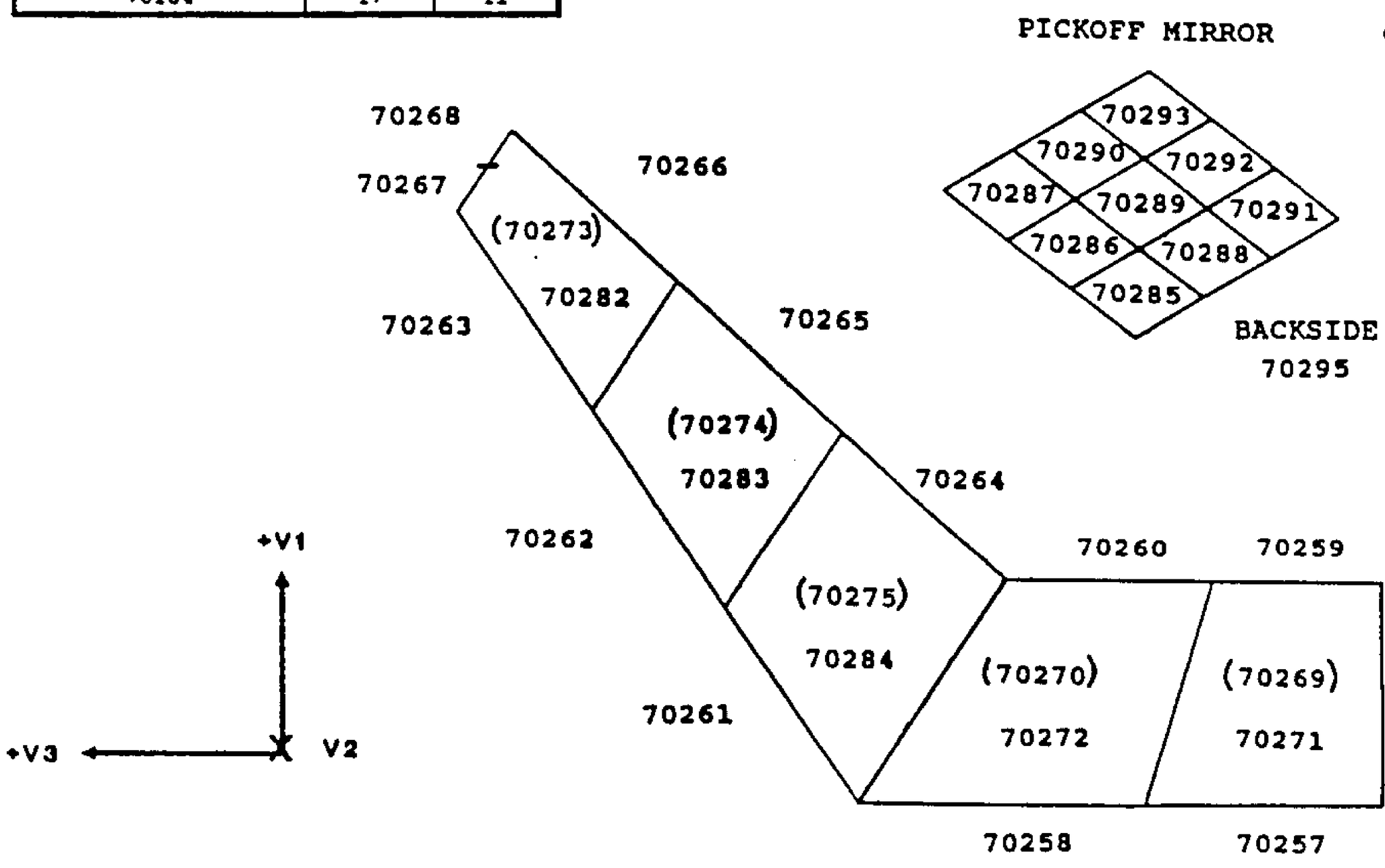

Figure 3.6-2 Pickoff-Arm/Mirror Effective Sink Temperatures

(Supersedes page 3.6-4 dated 29 June 1984)

Where ε and A are the emissivity and area of the ST node surface, and σ is the Stefan-Boltzmann constant.

The effective sink temperature ranges for the radial SI in the Operational, and Hold Modes are defined in Fig. 3.6-3. The numbers shown in Fig. 3.6-3 represent the orbital average effective sink temperature for each SI node.

The Hold temperatures represent the cold case temperatures with the power distributions of the remaining SIs selected so as to minimize T_{HOLD}. For a constant power dissipation from each SI (constant vs time and distribution) the orbital fluctuation for the average effective sink temperatures is less than ±4°C. For time varying power dissipations up to the maximum SI power levels defined in section 3.6.1.1.5 (20% over orbital average, 50% duty cycle) the orbital fluctuation for the average effective sink temperatures are less than ±8°C.

IRN 70

For a constant power dissipation from each SI (constant vs time and distribution) the orbital fluctuation in the individual effective sink temperatures is less than ±6°C. For time varying power dissipations up to the maximum SI power levels defined in section 3.6.1.1.5 (20% over orbital average, 50% duty cycle) the orbital fluctuation in the individual effective sink temperatures are less than ±10°C.

3.6.1.1.4 External Ground Strap Radiation. The external ground strap, paragraph 3.3.9.2, has surface thermal properties of $\alpha \leq 0.1$, $\varepsilon \geq 0.75$. Admin

3.6.1.1.5 Thermal Power. The SI has three different thermal power modes during ST science mission operations (Operate, Hold, and SI failed). The power levels for each mode are given in paragraph 3.7.

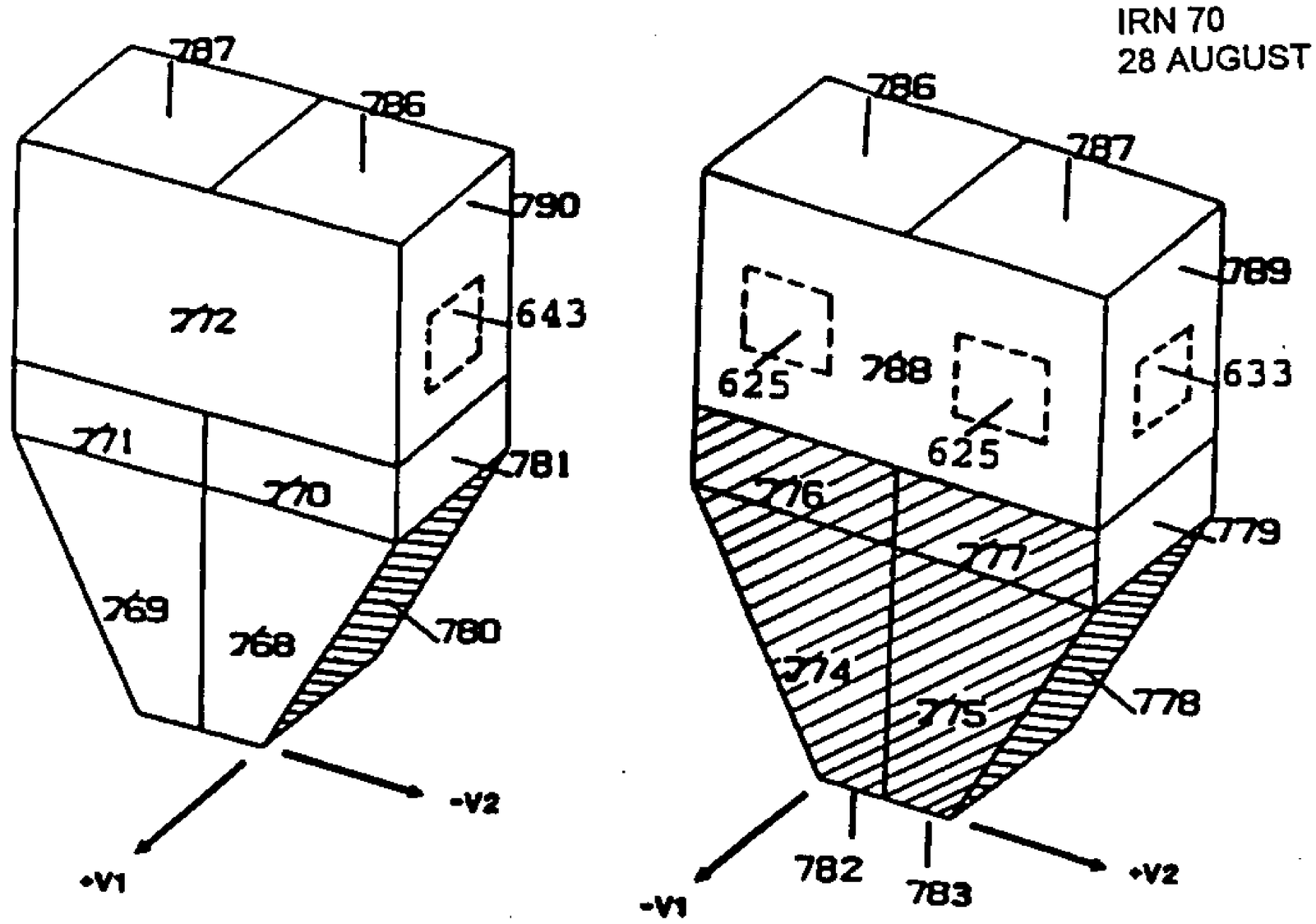

Notes:
1) Cross hatched areas view black MLI covering 21°C surfaces.
2) Dashed lines represent cut outs in the WF/PC MLI.
3) Surface 625 is under MLI surface 788
4) Surface 643 is under MLI surface 790
5) Surface 633 is under MLI surface 789

IRN 70

EFFECTIVE SINK TEMPERATURES (°C)

	NODE NUMBER	HOT OP/HOT HOLD	COLD OP/COLD HOLD
-V1	768	4	-9
	769	4	-9
	770	-2	-16
	771	-2	-16
	772	-7	-23
-V1	625	-4	-21
	776	-3	-19
	777	-3	-19
	788	-4	-21
-V2	633	-7	-23
	779	-5	-20
	789	-7	-23
-V2	643	-7	-22
	781	-4	-19
	790	-7	-22
-V3	782	21	21
	783	21	21
-V3	786	-7	-23
	787	-7	-23

NOTES: 1. Shaded area view black MLI covering 21°C surfaces.
2. Orbital fluctuation ≤ ±4°C.

Figure 3.6-3 Effective Sink Temperature Distribution for SI Operating and in Hold Mold.

(Supersedes page 3.6-6 dated 29 June 1984)

3.6.1.1.5.1 Thermal Power Mode Definitions. The SI power modes are defined as follows:

POWER MODE	THERMAL DEFINITIONS
Operational	SI components within operating temperature limits and preserve interface temperatures.
Hold	SI components are capable of scientific operation in less than 2 orbits and preserve interface temperatures.

3.6.1.1.5.2 Normal Science Mission Thermal Power Configuration. The aft shroud compartment radiative heat transfer is based on a normal science mission configuration for the SIs which consists of:

One axial SI at operational power
Three axial SIs at hold power
One radial SI at operational power

3.6.1.1.5.3 Orbital Heat Fluxes for External Radiator Thermal Design. The SSM is designed to operate in a nominal circular earth orbit, at orbital altitudes of from 398 to 593 km at 28.5 inclination. IRN 063

HEAT FLUX (W/m^2)	CONDITION	
	HOT ($+3\sigma$)	COLD (-3σ)
SOLAR	1440	1264
ALBEDO	605	228
EARTH	272	197

3.6.1.1.5.4 Solar Array and HGA Obscurations. The Solar Array and High Gain Antenna geometry, surface properties, and temperatures are given in Figure 3.6-4.

3.6.1.1.6 Radiation from SSM to SI External Radiator. The net heat transfer from SSM to SI external radiator across the Light Baffle is a maximum of 20 watts.

LMSC RELEASED CONTROLLED

3.6.1.2 Non-Operational Thermal Interfaces. The non-operational modes are defined as when no science mission operations are being conducted; however the SI must be able to be returned to an operate condition. There is no requirement for the SI to maintain the interface temperatures. The OTA and SI interface temperatures are greater than -20°C except for safing when the OTA and SI interface temperatures are greater than -25°C.

3.6.1.2.1 Pre-Flight. The pre-flight environments include transportation, storage, pre-launch, and ground testing.

3.6.1.2.1.1 Transportation and Storage. Ref.: IRD STR-02.

3.6.1.2.1.2 Prelaunch and Ground Testing. Ref.: IRD STR-02.

3.6.1.2.2 Flight. The non-operational flight modes are defined as launch, ascent, initial deployment, unscheduled maintenance, retrieval, scheduled maintenance, orbiter re-entry and return to earth, post landing and safing.

3.6.1.2.2.1 Launch and Ascent Temperatures. Lift-off effective sink temperatures are between 21°C and 25°C.

3.6.1.2.2.2 Initial Deployment. In initial deployment, power to the SIs is available within 7 hours from launch. The ST is removed from the Orbiter Cargo bay 26 hours after launch. The minimum effective sink temperatures with time are given in the list on Table 3.6-1.

IRN 58 IRN 071

3.6.1.2.2.3 Retrieval. The SI effective sink temperatures during ST retrieval are between -50°C and 0°C. SIs are limited to hold power during retrieval. Maximum time power is off is 3 hours.

LMSC RELEASED CONTROLLED

IRN 071

TABLE 3.6-1

SINK TEMPERATURES (°C)

Time (Hours)	Second Day
0	21.1
1.0	21.1
2.0	1.1
3.0	-5.9
4.0	-10.6
5.0	-13.1
6.0	-15.0
7.0	-17.2
8.0	-18.0
9.0	-19.6
10.0	-20.9
11.0	-21.2
12.0	-22.6
13.0	-22.9
14.0	-23.5
15.0	-24.7
16.0	-24.4
17.0	-25.4
18.0	-25.9
19.0	-25.7
20.0	-26.7
21.0	-26.7
22.0	-27.0
23.0	-27.9
24.0	-27.4
25.0	-28.2
26.0	-28.4
27.0	-35.5
28.0	-38.9
29.0	-40.9
30.0	-42.7
31.0	-44.3
32.0	-45.3
33.0	-46.3
34.0	-46.8

IRN 58

LMSC RELEASED CONTROLLED

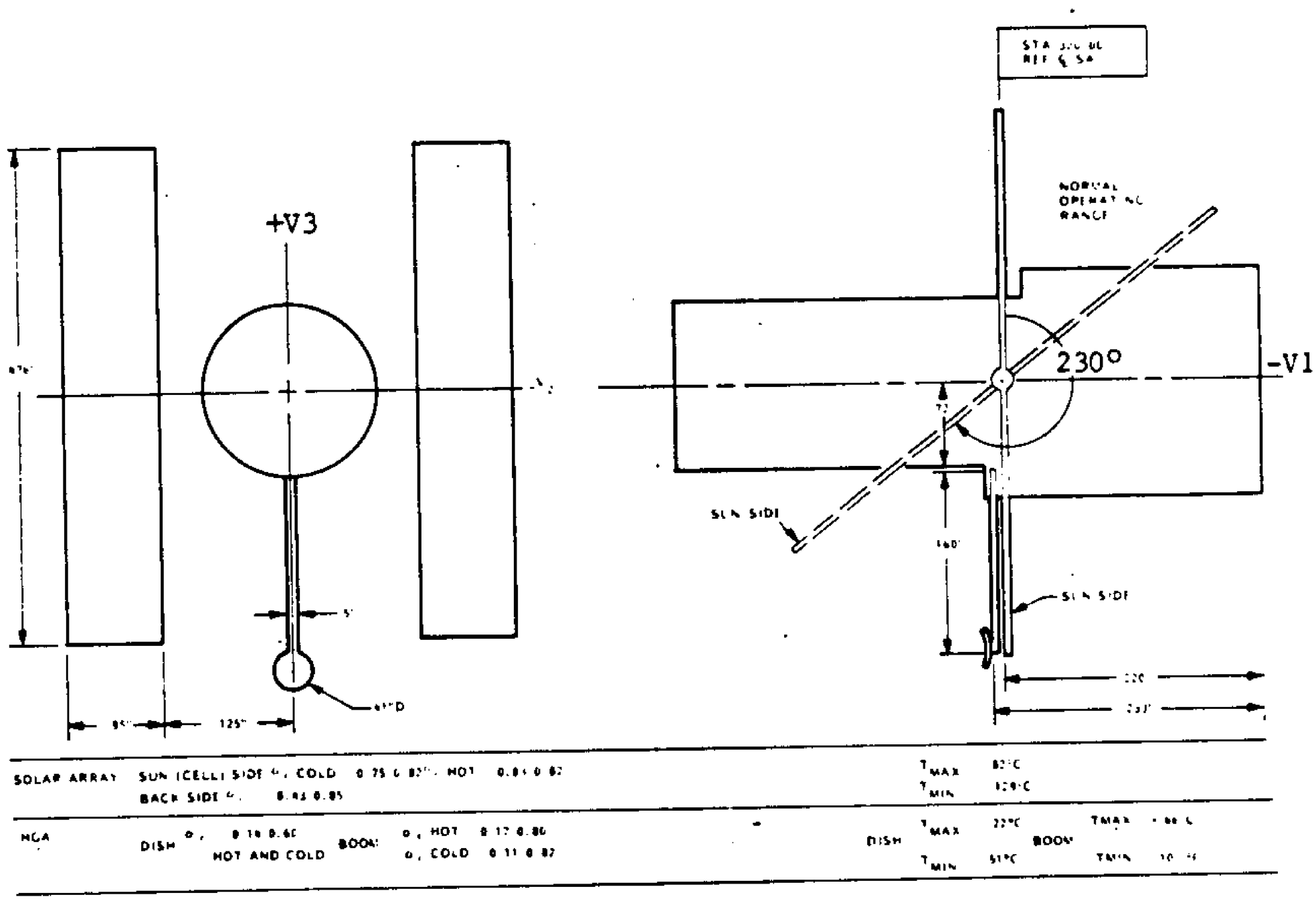

Figure 3.6-4 Solar Array and High Gain Antenna Obscuration, Surface Properties, and Temperatures

3.6.1.2.2.4 Scheduled Maintenance. The SI effective sink temperatures during ST maintenance are between -30°C and -5°C. During maintenance when power is available the power provided will be Hold Mode power. Additional power is provided to prevent damage. The maximum time power is off is 6 hours. The time power is on prior to the power off period is 18 hours. IRN 70

LMSC RELEASED CONTROLLED

IRN 70

3.6.1.2.2.5 Safing. The SI effective steady state sink temperatures during ST safing condition (ST in sun pointing orientation) are between -50°C to -20°C. During the transition from hold or operate mode to safe mode, the effective sink temperature will be equal to or less than the temperature defined by:

$$\frac{T - T_o}{T_s - T_o} = 1 - e^{-\sqrt{0.25t}}$$

where T = sink temperature at time t
T_o = sink temperature at time t = o (Ref Fig 3.6-3)
T_s = sink temperature in safe mode
t = elapsed time from entering safe mode (Hr)

SIs are limited to hold power during safing. SI electronic boxes are a minimum of -40°C prior to being turned on after safing.

3.6.1.2.2.6 Entry. The SI effective sink temperatures inside the SSM are between -50C and 0°C at the start of entry and between 0°C and 50°C prior to post-landing. The effective sink temperatures for the external radiator are between -50°C and 35°C at the start of entry and between 0°C and 105°C prior to post-landing. The entry period is a maximum of 45 minutes.

3.6.1.2.2.7 Post Landing. The SI effective sink temperatures during Post-Landing are between 10°C and 32°C after 4 hours from start of entry.

3.6.1.3 Contingency Retrieval. Contingency retrieval is a mode after which the SI is not required to be returned to science mission operations. The SI effective sink temperatures during contingency retrieval are between -65°C and -40°C. SI's are limited to hold power. The contingency mode is limited to 45 days.

3.6.2 Magnetic Environment. The cumulative magnetic field on radial instrument is obtained by adding the fields given below.

3.6.2.1 Magnetic Fields. All radial SI components are subjected to the following magnetic fields without any degradation in their performances:

a. The earth's magnetic field which is composed of a maximum time varying component of 0.33 gauss and a constant component of 0.21 gauss with a subtended angle of 65 degrees.

b. A time varying magnetic field generated by magnetization of soft magnetic materials and by electromagnetic devices within the ST as given in Fig. 3.6-5. This field is in addition to the earth's field.

3.6.2.2 SSM and SI Magnetic Field Intensity. The maximum magnetic field caused by the SI in any orientation at the SI envelope does not exceed 0.8 gauss. The maximum total magnetic field caused by the SSM in any orientation within the SIs volume shall not exceed 0.2 gauss.

3.6.2.3 OTA Magnetic Field Intensity. The maximum magnetic field generated by the OTA at any ST attitude orientation when operating in the earth's magnetic field does not exceed the levels specified below.

a. A level of 2.0 gauss time-varying field at the boundary of the envelope allocated to the Radial SI as shown in Fig. 3.3-1.

b. A level of 0.1 gauss constant magnetic field at the boundary of the envelope allocated to the radial SI as shown in Fig. 3.3-1.

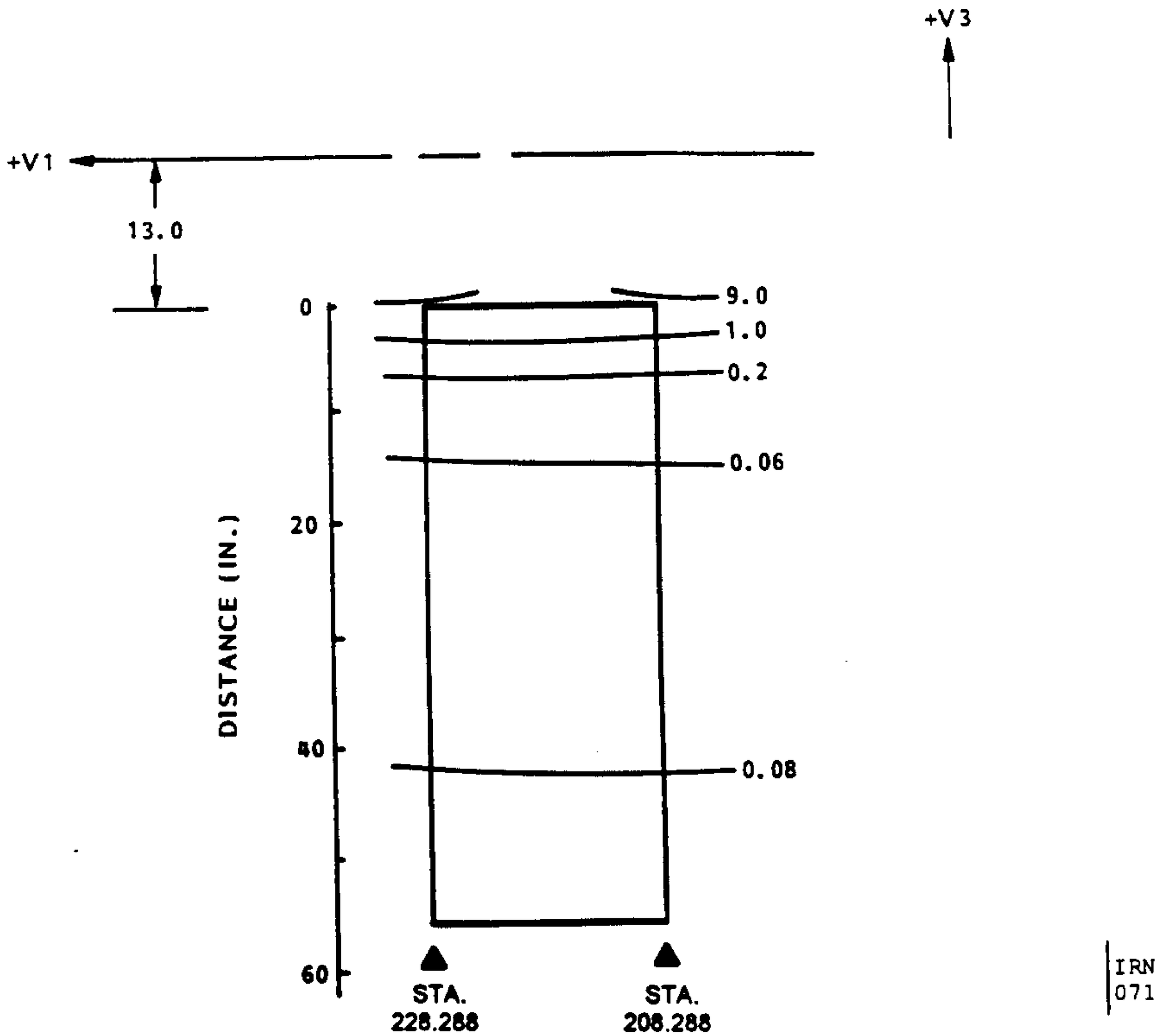

Figure 3.6-5 Varying Magnetic Field at Radial SI Due to ST Sources

LMSC
RELEASE
CONTROLLED

(Supersedes page 3.6-13 dated 29 June 1984)

3.6.3 Contamination Control.

3.6.3.1 Volumetric Cleanliness. The contamination environment to which the SIs are subjected during all ground operations and during ascent and orbital operations is class 10K volumetric cleanliness per Figure 3.6-6. This cleanliness requirement does not apply during reentry and landing.

3.6.3.2 Surface Cleanliness. Surface cleanliness shall be in accordance with paragraph 3.2 of STR-29.

3.6.3.3 Material Outgassing. Materials selected for use on the SI shall be in accordance with paragraph 3.1 of STR-29. IRN 071

3.6.3.4 Molecular Outgassing Requirements. Molecular outgassing shall be in accordance with section 3.4 of STR-29.

3.6.4 Ionizing Particle Radiation. The external ionizing particle radiation environment, to which the outside surface of the radial SI radiator is exposed, is summarized in Table 3.6-2. The omni-directional ionizing particle environment within the aft shroud is summarized in Table 3.6-3. IRN 071

3.6.4.1 Galactic Cosmic Environment. Electronic parts used shall meet full performance in the galactic cosmic environment specified herein. A plot of the integral flux versus Linear Energy Transfer (LET) of the various energetic ions is shown in Figure 3.6-8 as a function of several shielding thicknesses. All electronic components (CCDs, electro-optical devices, integrated circuits, discrete semiconductors etc.) that support scientific measurements shall operate through the galactic cosmic environment without impacting system operation. IRN 076

All designs shall attempt to select parts with LET threshold greater than 25 MeVcm2/mg. However, if an LET threshold of greater than 25 MeVcm2/mg can not be achieved, the following approach shall be taken. Due to the sharp drop in the integral flux intensity of the environment at an LET of 1.5 MeVcm2/mg, all electronic parts must have an LET threshold greater than 3 MeVcm2/mg. Applications where parts with less than 25 MeVcm2/mg, such as opto-couplers (<1 MeVcm2/mg), Dynamic Random Access Memory (DRAM) or Static Random Access Memory (SRAM) (1 - 4 MeVcm2/mg) must be used, such applications shall employ hardening techniques to mitigate the possibility of single event effects. An analysis shall be performed to determine the system risk and the rate of the single event effect to the system.

3.6.5 Meteoroid Environment. The SSM aft shroud and the radial SI external radiator provides a 0.95 probability of protection for the radial SI against loss of functional capability due to impacts by meteoroids for periods up to two years.

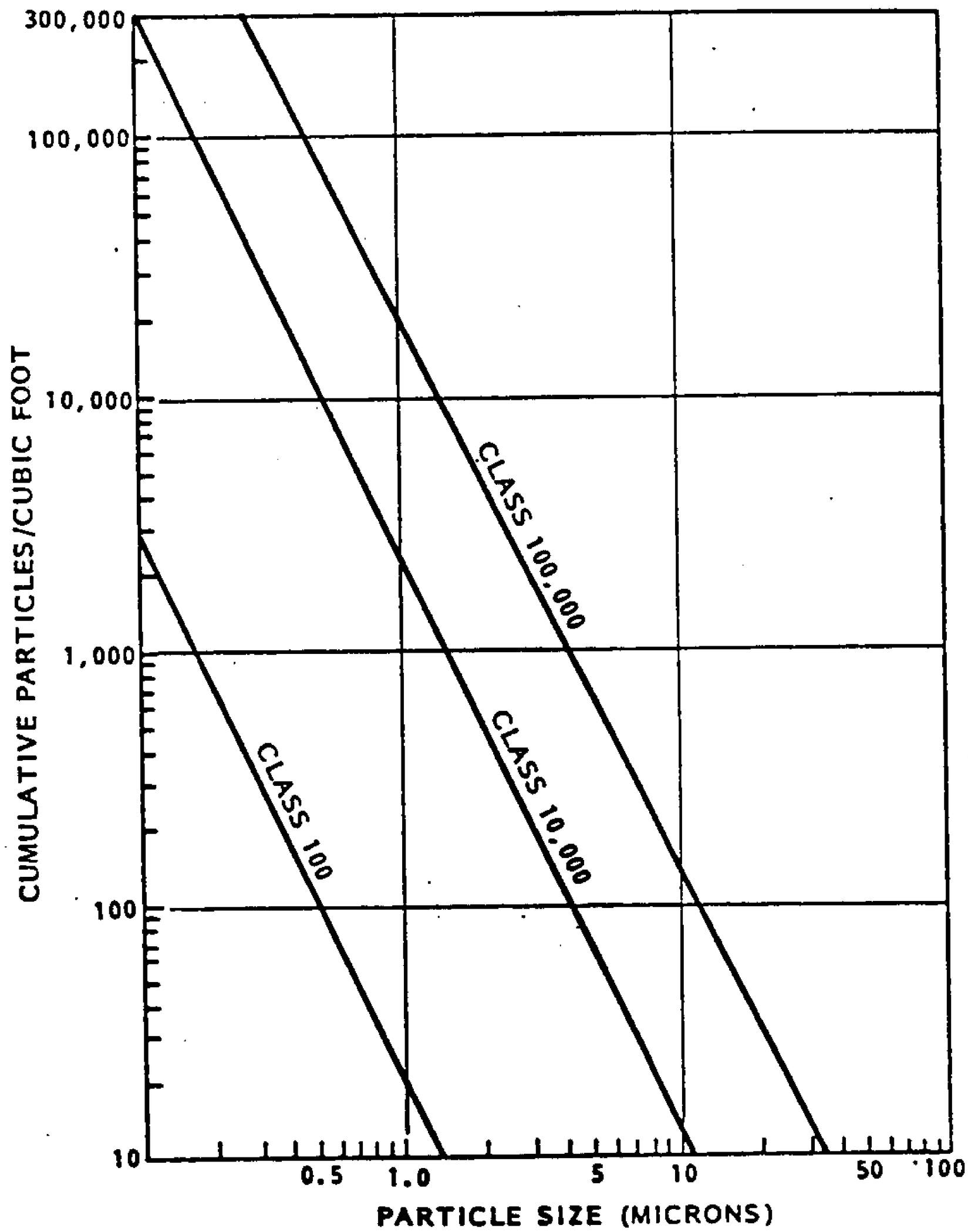

Figure 3.6-6 Particle Size Distribution Curves

IRN 071

TABLE 3.6-2

MAXIMUM EXTERNAL IONIZING PARTICLE RADIATION

Trapped Electrons		
Cumulative Fluence:	4.6×10^{11} e/cm^2:	E > 0.5 MeV
	6×10^{10}	1
	1×10^{10}	2
	7.7×10^{8}	3
	3.4×10^{6}	4
Maximum Electron Flux:	1.5×10^{5} e/cm^2-sec:	E > 0.5 MeV
Trapped Protons		
Cumulative Fluence:	2.8×10^{10} p/cm^2:	E > 4 MeV
	2.6×10^{10}	10
	2.4×10^{10}	20
	2×10^{10}	40
	1.2×10^{10}	100
Maximum Proton Flux:	3.8×10^{3} p/cm^2-sec:	E > 4 MeV
Solar Flare Protons		
Cumulative Fluence:	negligible	4 MeV < E > 100 MeV
Maximum Flux:	negligible	E > 4 MeV
Solar Wind:	negligible	
Auroral Protons:	negligible	
Cosmic Rays: 0.5 Particles/c^{m2} sec	E = 1 to 10^6 BeV (85% Protons, 13% Alphas)	

NOTE: The above values represent the ST external radiation environment during periods of minimum solar activity (Solar Minimum), as predicted for the 5-year period 1984 through 1988, taking into account the effects of the South Atlantic geomagnetic anomaly. During periods of maximum solar activity (Solar Maximum), e.g., 1990 through 1994, the predicted radiation levels for trapped protons will be less than shown above by approximately 50 percent.

LMSC RELEASED CONTROLLED

IRN 071

TABLE 3.6-3

MAXIMUM INTERNAL IONIZING PARTICLE RADIATION

Trapped Electrons

Cumulative Fluence:	1.2×10^{10} e/cm^2:	E > 0.5 MeV
	6.3×10^{9}	1
	1.2×10^{9}	2
	1.95×10^{8}	3
	2.08×10^{6}	4

Trapped Electron Ionizing Dose: 6.5×10^{2} rads(Si)
Maximum Electron Flux: 1.35×10^{4} e/cm^2-sec: E > 0.5 MeV
Maximum Dose Rate: 7.3×10^{-4} rads(Si)/sec

Trapped Protons

Cumulative Fluence:	2.2×10^{10} p/cm^2:	E > 4 MeV
	2.03×10^{10}	10
	1.91×10^{10}	20
	1.78×10^{10}	40
	1.12×10^{10}	100

Trapped Proton Ionizing Dose: 4.3×10^{3} rads(Si)
Maximum Proton Flux: 3.6×10^{3} p/cm^2-sec: E >4 MeV
Maximum Dose Rate: 7×10^{-4} rads(Si)

Total Trapped Proton plus Trapped Electron Ionizing Dose: 4.95×10^{3} rads(Si)

NOTES:

(1) The values stated above are based on predicted external radiation conditions during Solar Minimum for the 5-year period 1984 through 1988.

(2) The total ionizing dose stated above is an integrated value for the 5-year (Solar Minimum) period 1984 through 1988. For SIs, ORUs, and GRUs to be flown only through a 5-year Solar Maximum period, e.g., 1990 through 1994, the total ionizing dose for 5 years may be considered as 57 per cent of the value stated above. For exposure periods which do not coincide with either a 5-year Solar Minimum or a 5-year Solar Maximum, the total dose may be determined, by prorating the 5-year dose for each condition and summing the prorated dose values as applicable.

(3) For components to be used over the lifetime of the ST, the total dose will be 2.57 times the 5-year (Solar Minimum) dose stated above.

(4) The maximum dose rates are calculated for traversals through the South Atlantic geomagnetic anomaly.

LMSC RELEASED CONTROLLED

3.6.6 SSM Pressure Environment and SI Differential Pressure. The operational pressure environment within the SSM varies from 16.0 psia at launch to less than 1 x 10^{-6} torr in orbit. The pressure within the Aft Shroud will not exceed the profile given in Figure 3.6-6A. The SI maximum differential pressure during ascent and descent is shown in Figure 3.6-7. The maximum pressure differential between the interior of the external radiator and the Orbiter Cargo Bay is 0.1 PSI. IRN 59

3.6.7 Humidity. During all ground, transportation, storage and prelaunch operations the relative humidity is 0 to 50 percent maximum inside the SSM.

During entry, descent, and landing the humidity of the air on entering the SSM is uncontrolled. All SI surfaces which are at temperatures below the dew point of the incoming air are subject to condensation. After touchdown, a post-landing purge maintains the absolute humidity of the cargo bay at less than 34 grains of water vapor per pound of air.

IRN 59

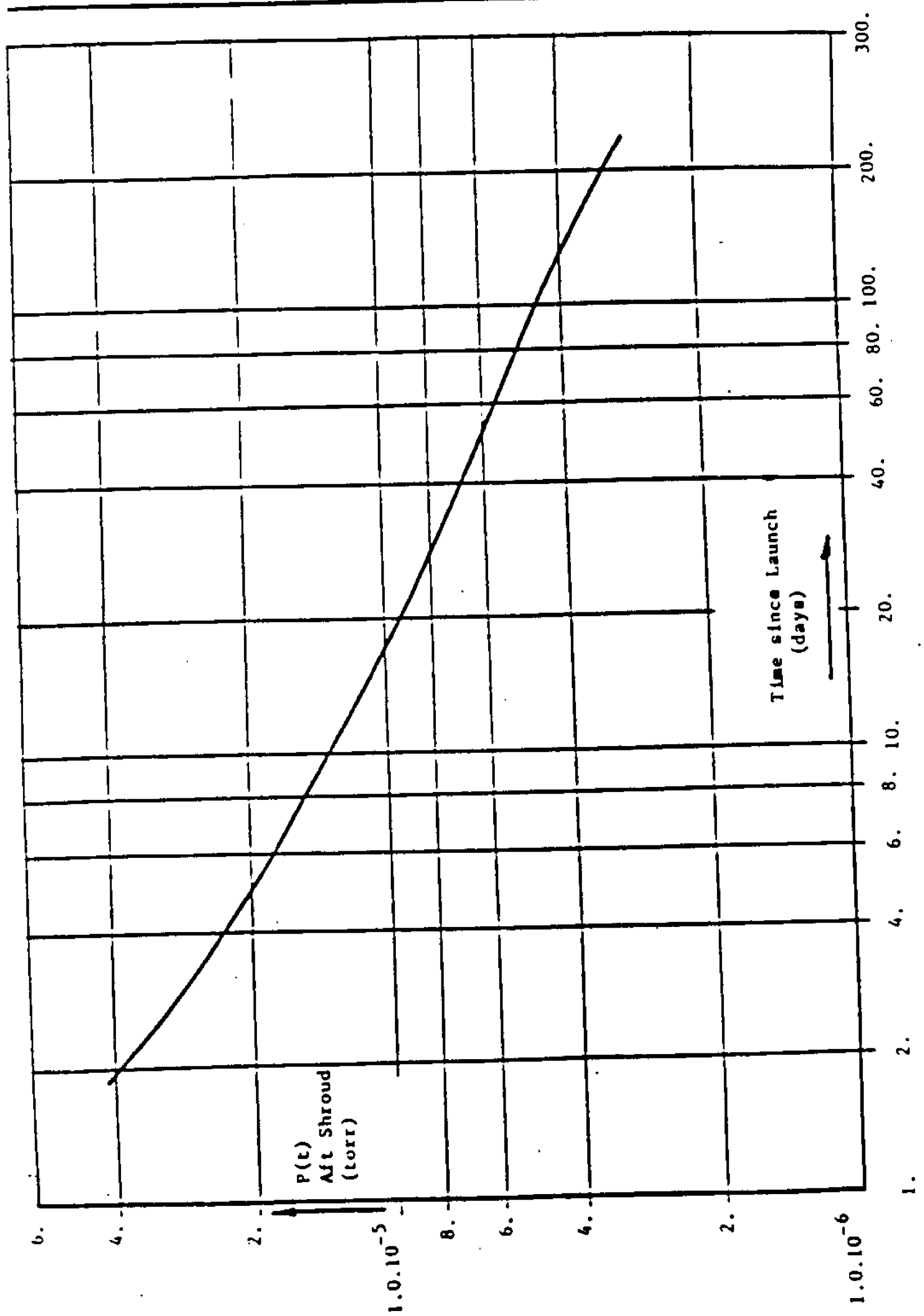

* Based on T/V Test correlated predictions for the following prelaunch timeline:
- Interior at 40% relative humidity for 13 months following thermal vacuum test
- Interior at 15% relative humidity to launch minus 2 days
- Interior at 40% relative humidity for 2 days prior to launch

Figure 3.6-6a Aft Shroud Orbiter Pressure Profile

(New Page created by IRN 59)

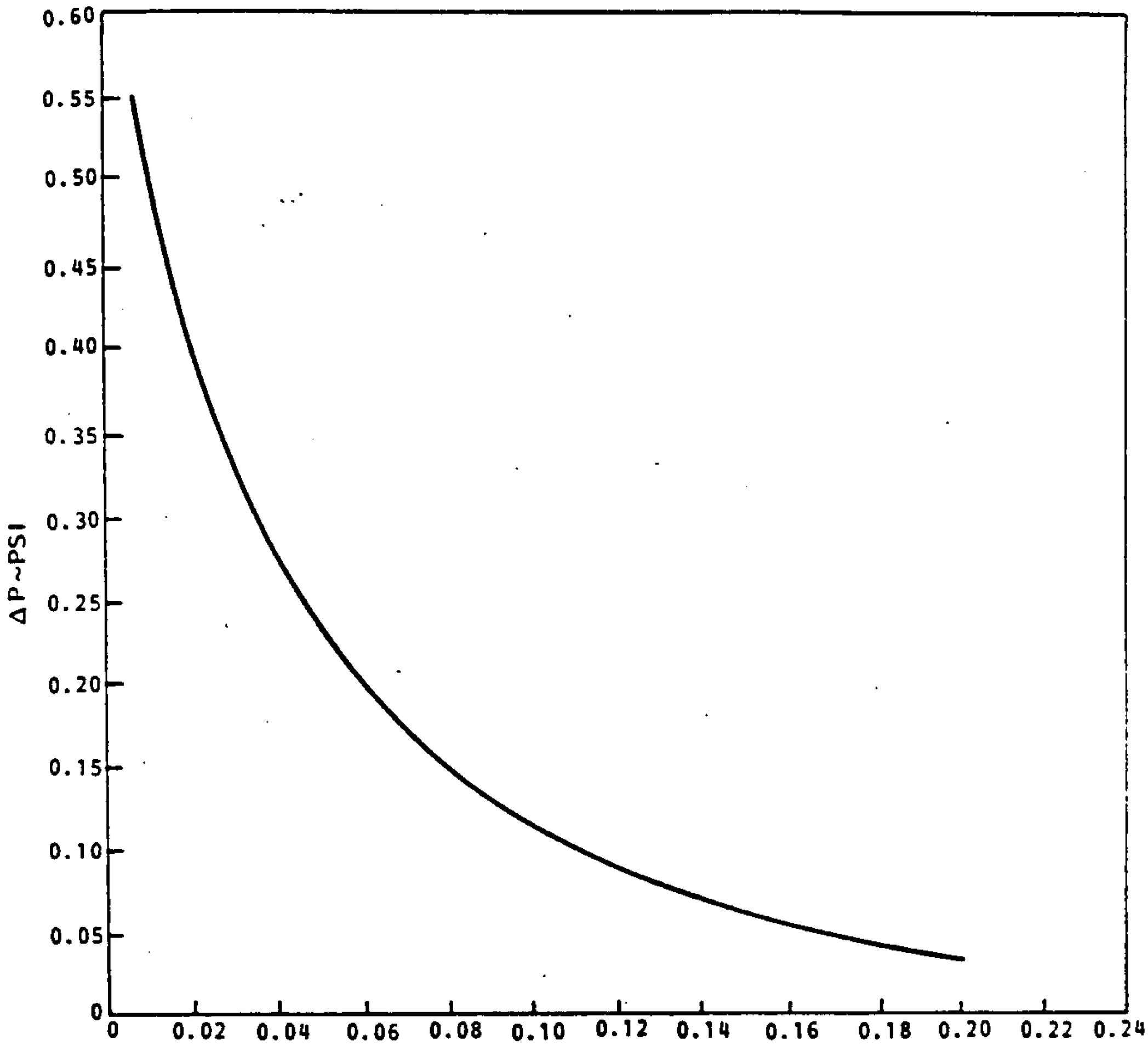

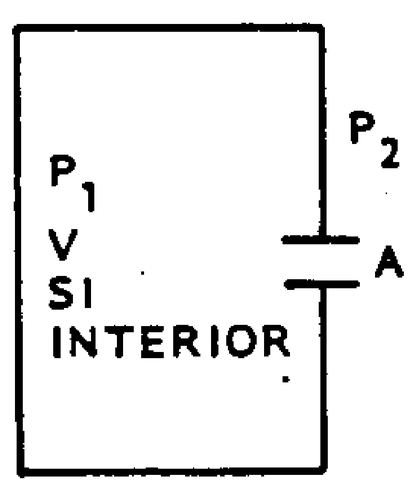

$A/V \sim IN^2/FT^3$

$\Delta P = P_1 - P_2$ - PSI

A = SI VENT AREA -IN^2 (UNFILTERED)

V = SI COMPARTMENT VOLUME - FT^3

NOTE: FOR A FILTERED OPENING, THE VENT AREA (A) IS EQUAL TO THE EFFECTIVE AREA OF THE FILTER

Figure 3.6-7 Maximum SI Wall Differential Pressure Versus a Ratio of Vent Area to Volume

IRN 076

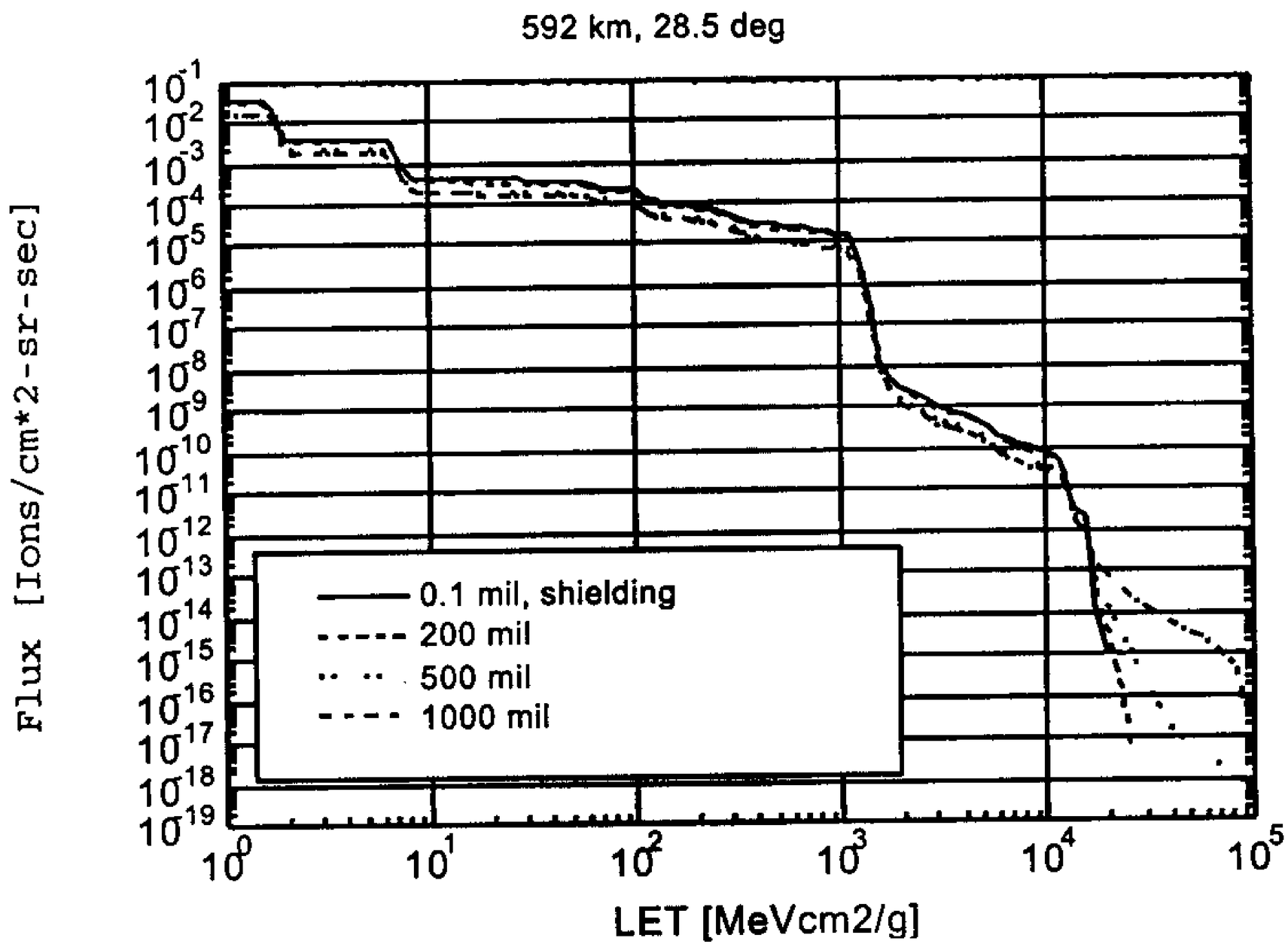

Figure 3.6-8 Galactic Cosmic Environment

3.7 Electrical Power. The power consumed by the SI, including any power required by the SI C&DH Remote Module (RM) mounted in the SI, and any peak power excursion, shall not exceed the following values. In normal operate mode the power averaged over one orbit shall not exceed 189 watts. In hold mode the power averaged over one orbit shall not exceed 93 watts. Peak power of 262 watts for 2 minutes per orbit is permitted as long as the thermal constraints of 3.6.1 are not exceeded. IRN 053, 071

3.7.1 Power Buses. The SSM supplies the SI two switched power buses for SI operating power and two switched buses for the RM power as shown in Fig. 3.7-1. Each bus conforms to the requirements specified in the following paragraphs. Under normal operating conditions the SSM powers all power buses simultaneously. The SI ensures that all primary power returns are isolated from structure and returned through the interface connector to the SSM negative return bus.

3.7.2 Fusing. Each power bus is fused in the SSM EPS to protect harnessing and other ST equipment from shorts occurring in SI equipment. The SSM fuse size is selected to ensure that steady state current, surge current and inrush currents have no deleterious effects on fuse operation. Fuse size and characteristics are as shown in Fig. 3.7-1 and Table 3.7-1. The input filter capacitance in the RM is limited to a maximum of 500 micro farads to keep from blowing the three ampere fuse.

3.7.3 Switching. SSM switching devices used for control of the primary and redundant buses are capable, as a minimum, of switching currents up to the fuse rating to ensure "soft shorts" below the fuse rating can be isolated from the SSM power buses. Each switch contact is capable of switching the rated current shown in Table 3.7-1. The internal SI power control is capable of switching in-rush currents and turn on voltage transients.

LMSC RELEASED CONTROLLED

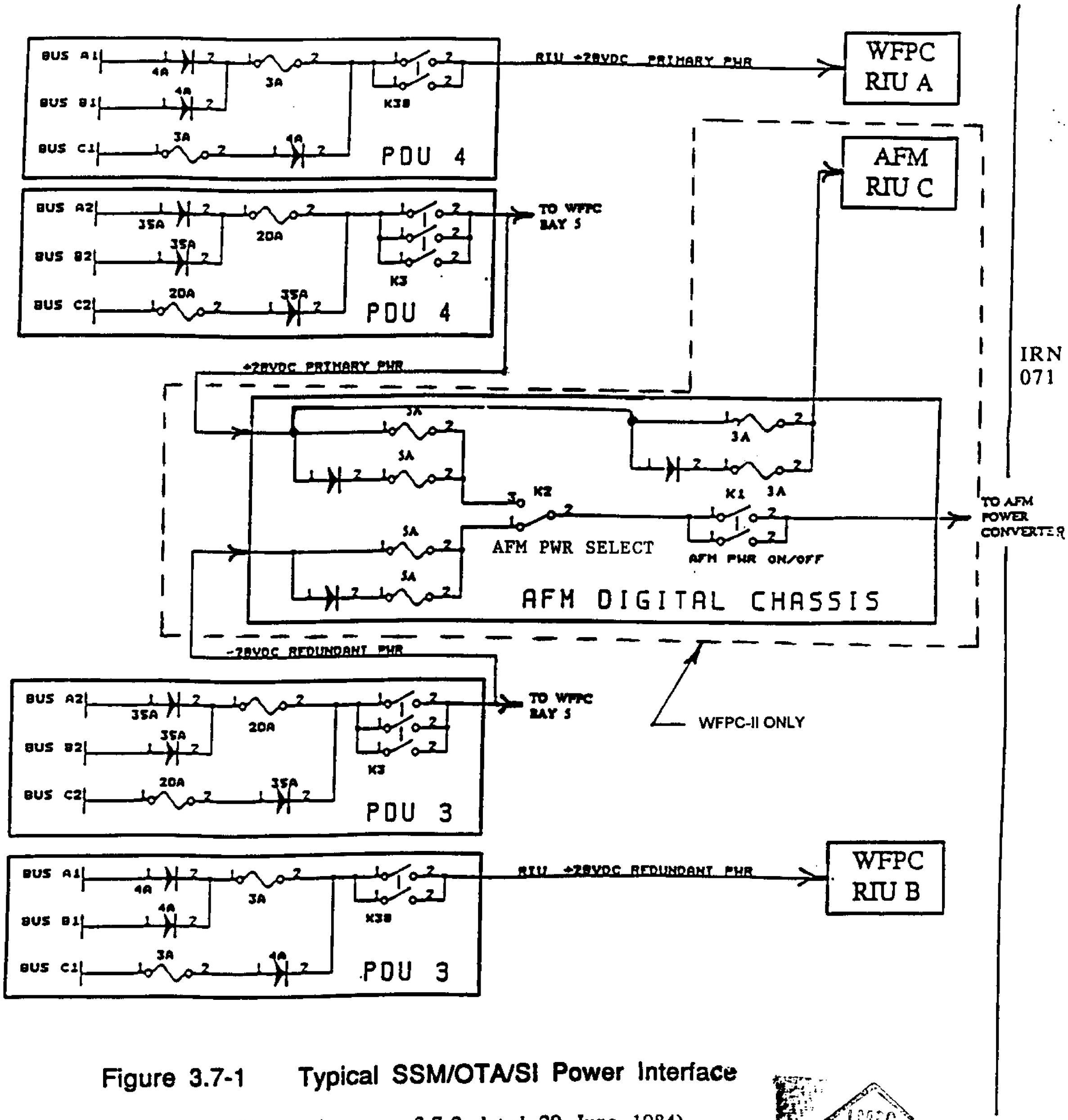

Figure 3.7-1 Typical SSM/OTA/SI Power Interface

(Supersedes page 3.7-2 dated 29 June 1984)

LMSC
RELEASED
CONTROLLED

Table 3.7-1
CIRCUIT PROTECTION

Blow Time	Rated Fuse Size (Amps)	Blow Current (Amps)
0.1 sec *	3	8.3
0.1 sec *	20	72

* Fuse blow current based on -55°C and a maximum rating factor of 110%.

3.7.4 Operating Voltage. The SSM supplies to each SI power interface connector a nominal operating voltage of +24 to +32 Vdc under maximum load conditions. Each SI is capable of surviving, but is not required to operate within specification, during application of voltages of +21 to +24 and +32 to +35 Vdc.

3.7.5 Bus Control Circuit. No single point failure within an SI will simultaneously blow both primary and redundant bus fuses.

3.7.6 Section not used.

3.7.7 Grounding of SIs to ST Structure. The SI enclosures are bonded to the ST through short copper bonding straps connected to the SIs. The bonding straps are removable for in-orbit maintenance. The bonding resistance between the bonding strap and each end connection to structure does not exceed 2.5 milliohms. The bond strap dimensions are 18.7 in. max. x 1.25 in. min. x 0.010 in. The bond strap resistance does not exceed 2.0 milliohms and the inductance does not exceed 0.4 microhenries when determined by analysis in accordance with the following formula:

$$L - .00508\ 1\ (2.303 \log \frac{2\ 1}{w + t} + 0.5 + .2235 \frac{w + t}{1})$$

Where:

l = length in inches betwen attach points

w = width in inches

t = thickness in inches

L = Inductance in microhenries

3.7.7.1 Mount Point Fitting Resistance. Minimum resistance of each mount point fitting is 1k ohm.

3.7.7.2 Multi-Layer Insulation (MLI). For multi-layer insulation forming an exterior surface, all the conductive MLI layers are grounded to each other and the SI structure to prevent static charge buildup. The resistance between the MLI ground connection and the outer conductive MLI layer is 100 K ohms or less. The measurement is from the ground connection to a point 1 inch distant on the MLI. The resistance from the ground connection to the SI structure ground is 1.0 ohm or less.

3.7.8 EMC. The SI is electromagnetically compatible with the SSM as specified in the following paragraphs.

3.7.8.1 Dynamic Impedance. The impedance of the power lines (Fig. 3.7-1) as seen by the SI is shown in Fig. 3.7-2. These values include the bus impedance and the cable impedance between the SSM Power Distribution Unit and the SI connector.

3.7.8.2 In-Rush Current. With power applied, the SI limits in-rush currents on any single bus during turn-on and during switching events to values within the envelope shown in Figure 3.7-3. Rate of rise does not exceed 6 amps/usec. These values apply at 30 ± 0.5 Vdc.

3.7.8.3 SI Generated Ripple & Noise. The SI does not generate ripple and noise on any single power bus in excess of the values shown in figure 3.7-4. These values apply at 30 ± 0.5 Vdc.

3.7.8.4 Ripple and Noise Susceptibility. The SI is not susceptible to ripple and noise on the power lines. Susceptibility limits are shown in Figure 3.7-5. These values apply at 24 ± 0.1 Vdc.

3.7.8.5 Transient Susceptibility. The SI is not susceptible to transients that may appear on the power lines, and between power line return and structure. Figure 3.7-6 defines the transient waveforms. These values apply at 24 ± 0.1 Vdc.

3.7.8.6 Survival. The SI survives power interruptions for up to 500 milliseconds duration, assuming diode isolation between power source and SI.

3.7.8.7 Radiated Susceptibility (E-Field)(Peak Field Strengths). The SI shall not be degraded in performance when subjected to the following radiated fields: IRN 071, 076

14 KHz to 35 MHz:	1 volt/meter CW (continuous wave)
35 MHz to 1 GHz:	1 volt/meter AM (modulation peak amplitude)
1 GHz to 3 GHz:	5 volts/meter AM (modulation peak amplitude)
*1.8 GHz to 2.3 GHz:	10 volts/meter ("S" band)
*14.5 GHz to 15.5 GHz:	35 volts/meter ("KU" band)

Modulation 30 to 100 percent at 1.0 KHz (square wave)

* These requirements apply only during servicing operations with the shuttle.

3.7.8.8 Radiated Electric Field Emissions. The SI shall not produce radiated electric field emissions, both narrow band and broad band in excess of the limits shown in Figures 3.7-8 and 3.7-9. Test method will be in accordance with MIL-STD-462, Method RE02. IRN 046

3.7.9 6.144 MHz Clock Interface. Redundant sine wave clock signals are wired from the DMS redundant master oscillators to the Radial SI ORU signal connector. The clock signal is a 6.144 MHz ± 0.0001 percent sine wave with a phase jitter of less than 0.01 percent and an amplitude of 1.3 ± 0.3 vrms, as measured at the SI ORU connector. The clock interface circuits are shown in Figure 3.7-7. The transformer located in the radial SI matches the 75 ohm impedance of the twisted shielded pair lines with the 50 ohm impedance of the Radial SI clock circuit. The transformer will be provided GFE to the SI Contractor, if required. IRN 076

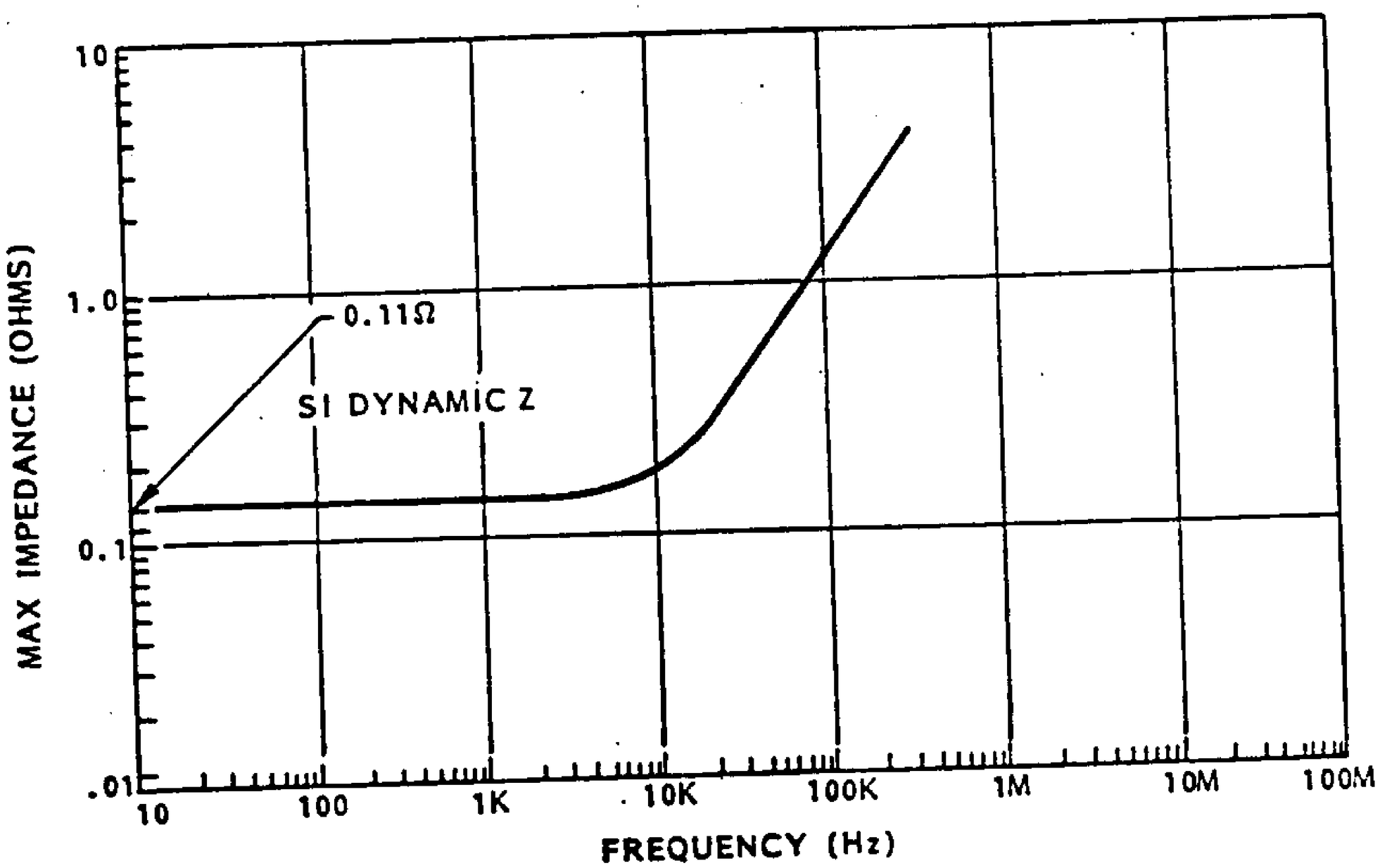

Figure 3.7-2 ST Power Dynamic Impedance at SI Connector

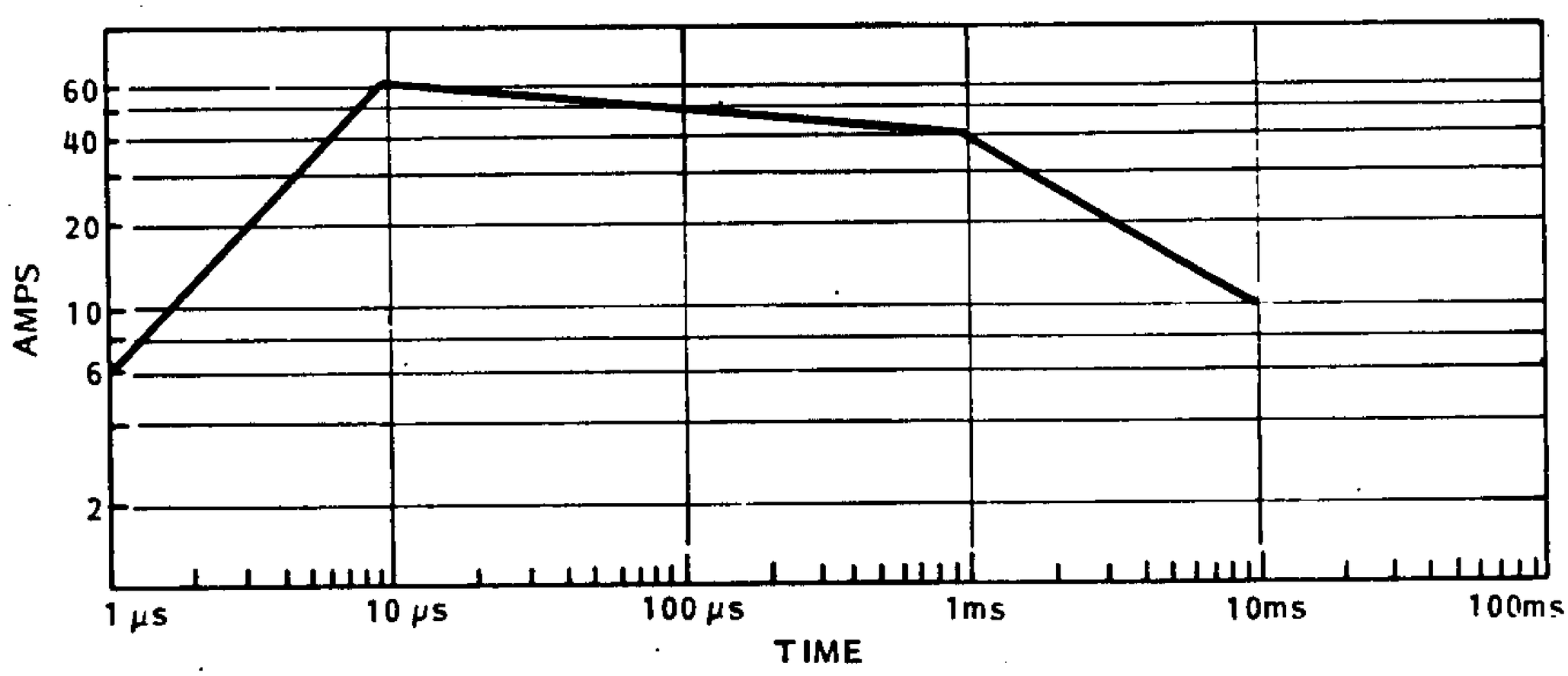

Figure 3.7-3 In-Rush Time Current Profile

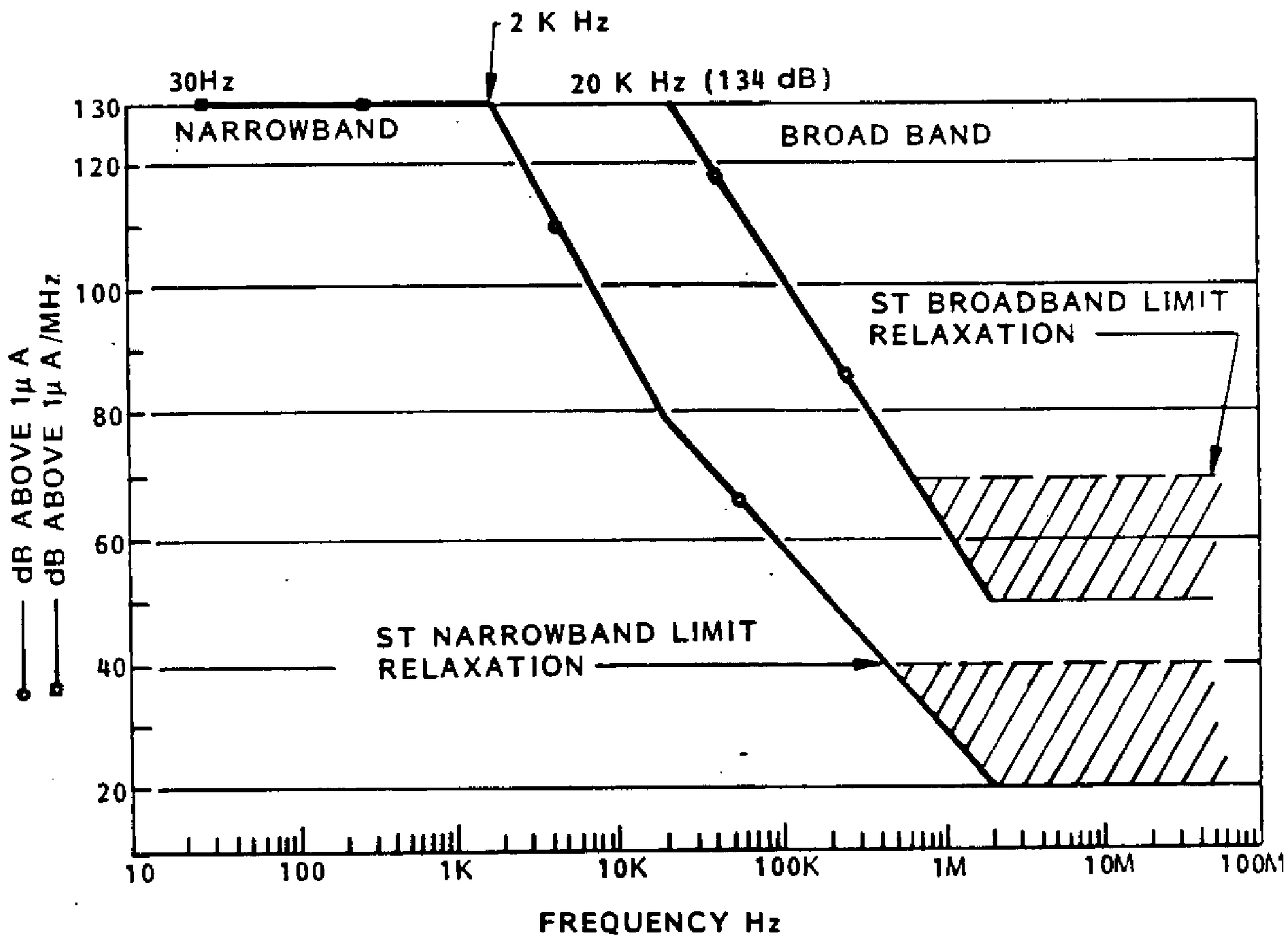

Figure 3.7-4 SI Generated Ripple and Noise Limits

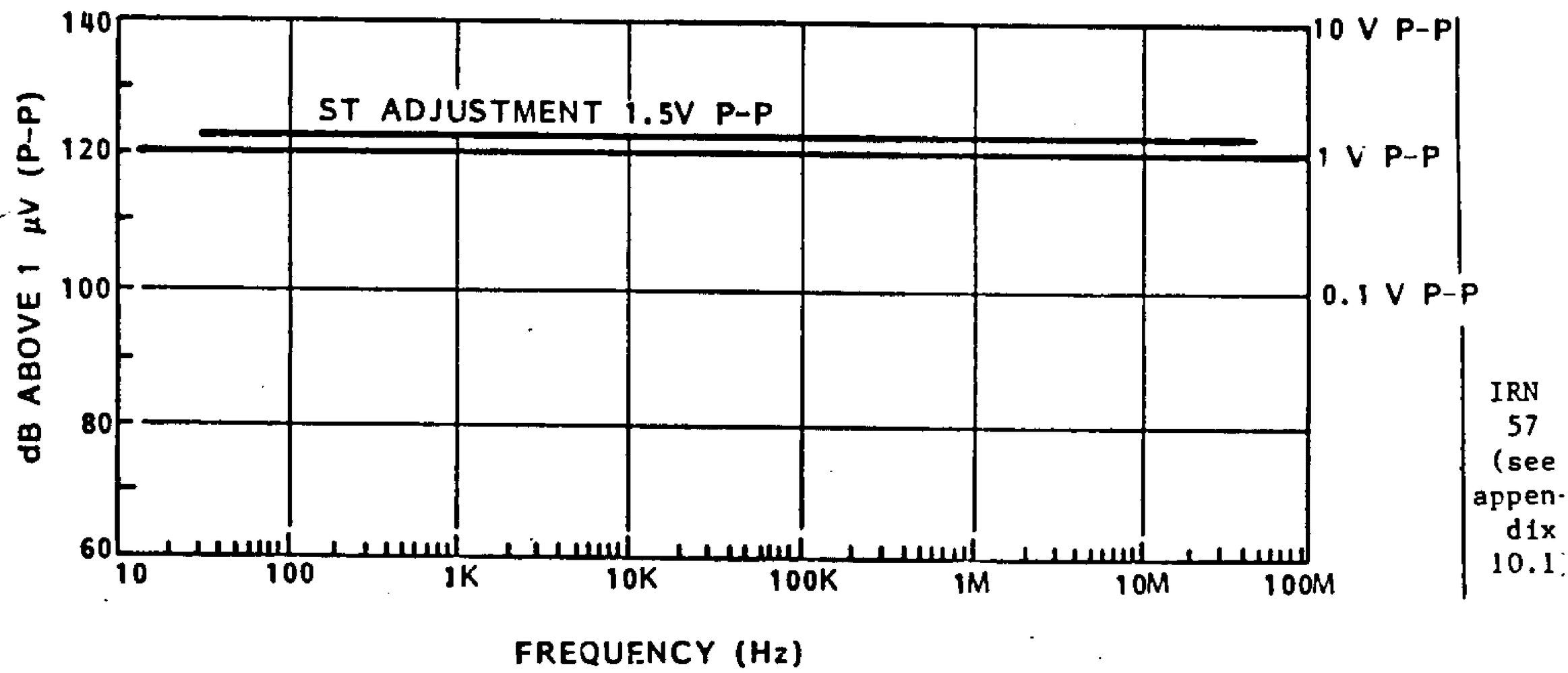

Figure 3.7-5 SI Equipment Ripple and Noise Susceptibility

(Supersedes pg. 3.7-9 dated 29 June 1984)

IRN 076

PLUS TO RETURN:

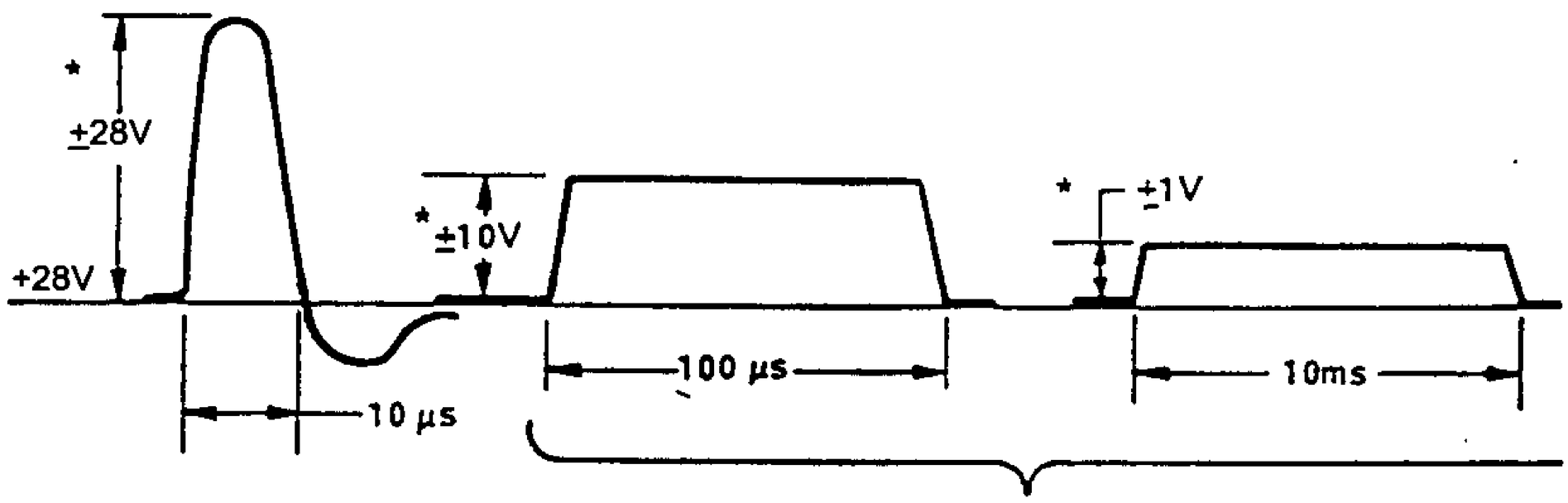

TRAPEZOIDAL - RISE AND FALL TIMES 20% OF TOTAL DURATION

RETURN TO STRUCTURE:

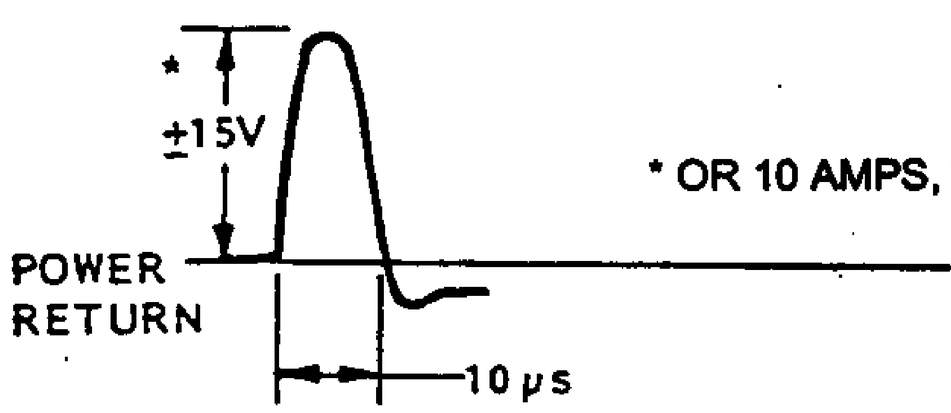

* OR 10 AMPS, WHICHEVER OCCURS FIRST

Figure 3.7-6 Transient Susceptibility Test Waveforms

(Supersedes page 3.7-10 dated 29 June 1984)

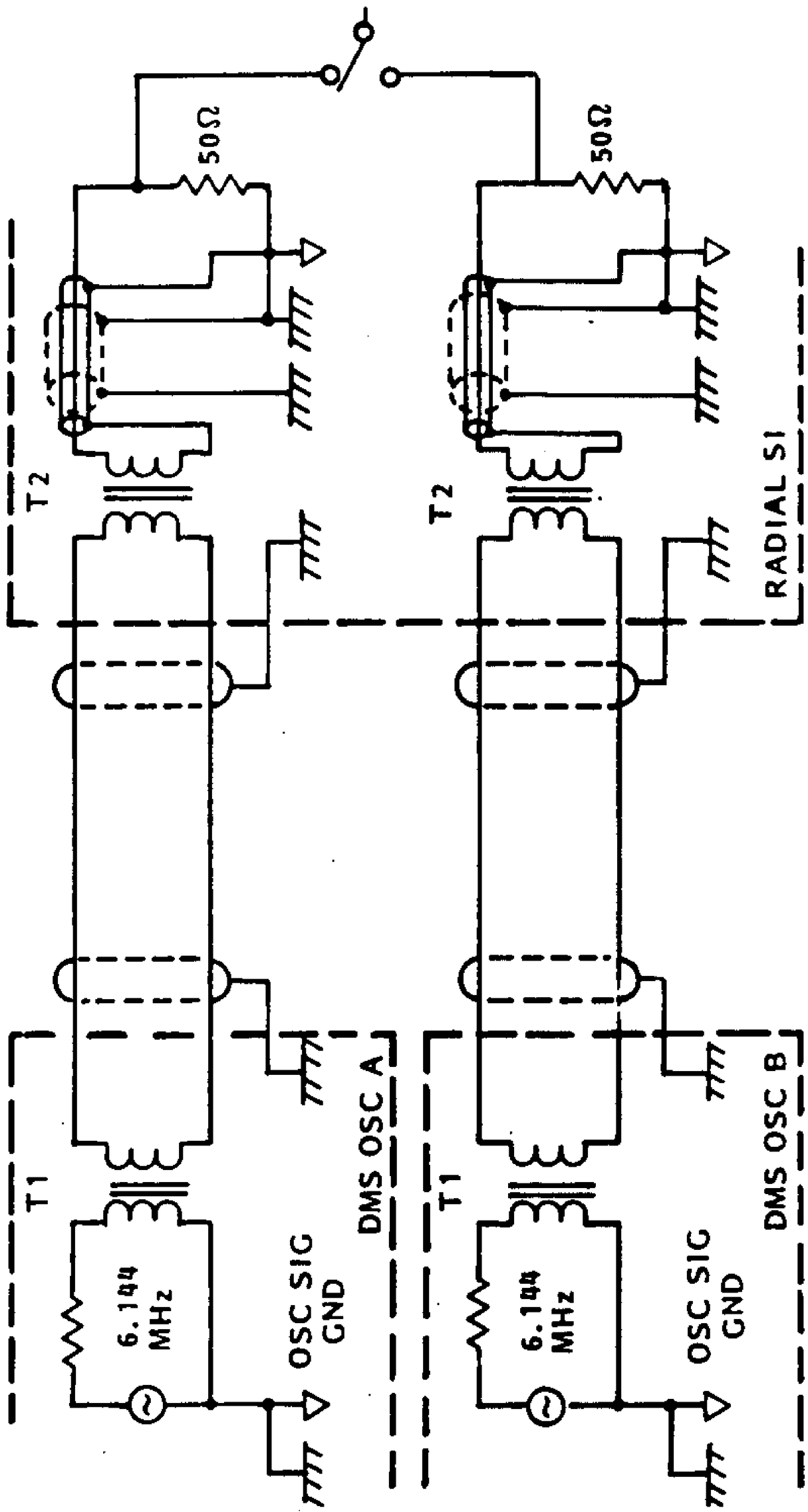

Figure 3.7-7 6.144 MHz Clock I/F

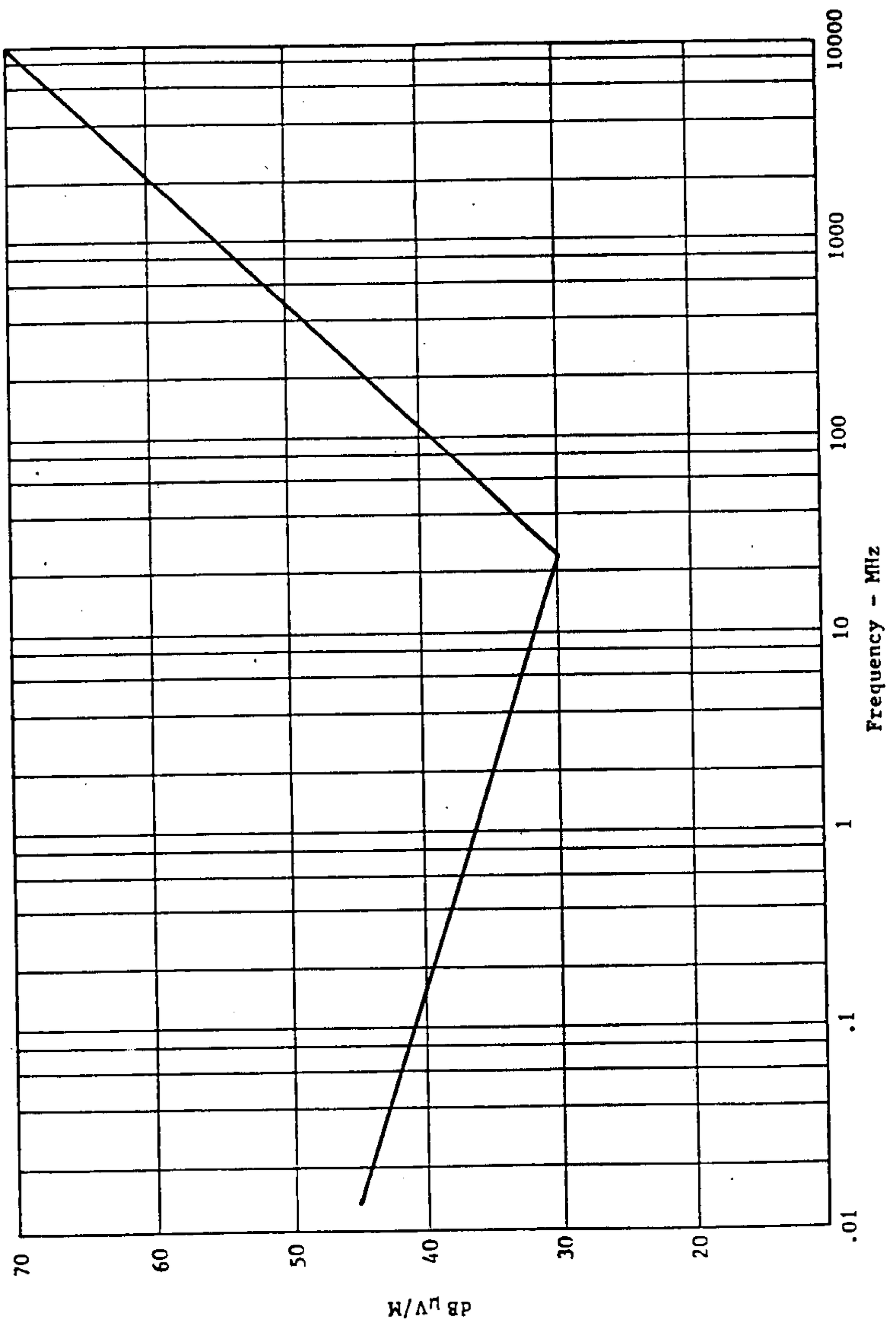

Figure 3.7-8 - Limit for RE02 Narrow Band Radiated Emission

IRN 46

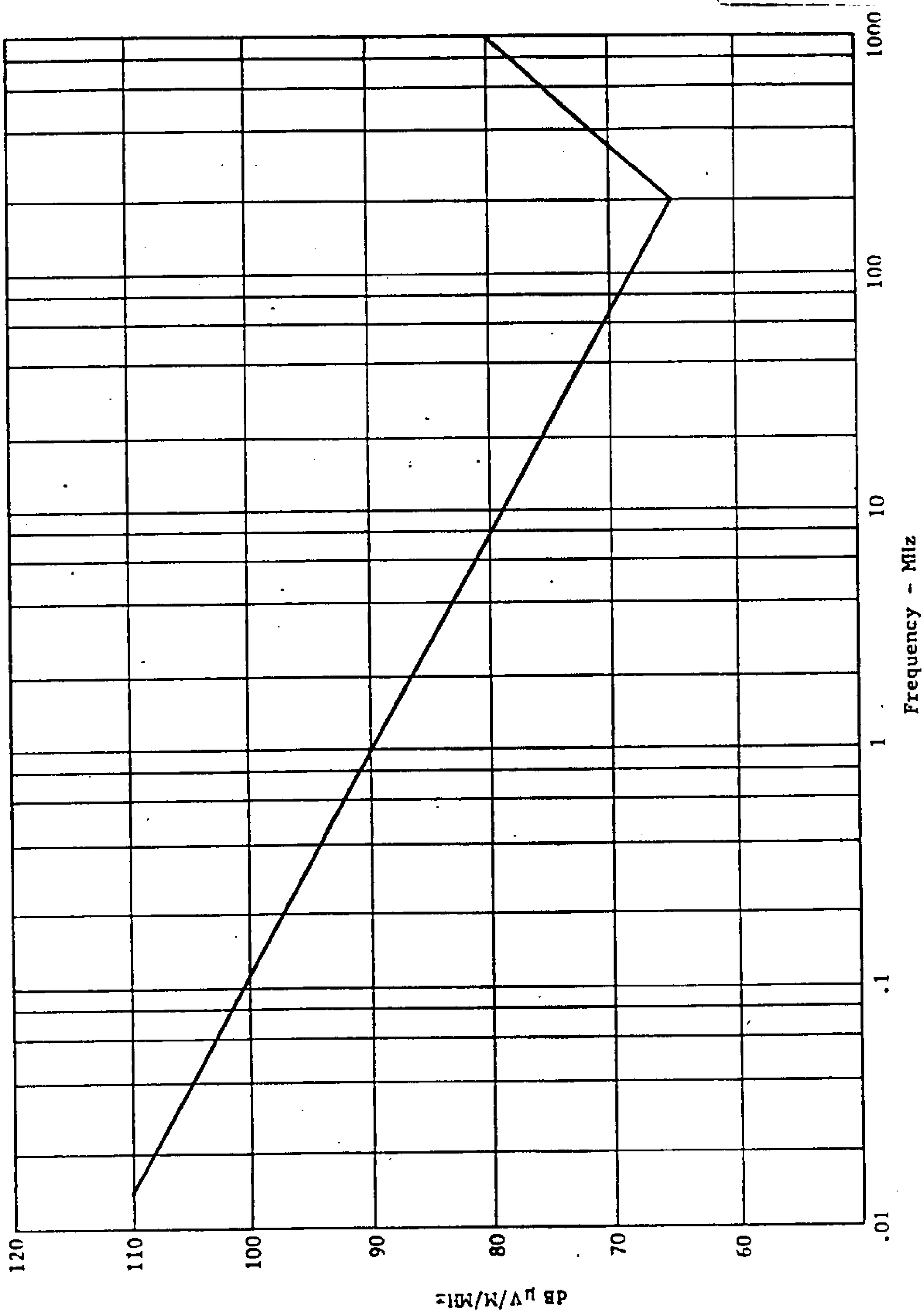

Figure 3.7-9 - Limit for RE02 Broad Band Radiated Emission

IRN 46

(New Page created by IRN 46)

3.8 Pointing Control. The ST Pointing Control System (PCS) has a functional interface with the SIs via the SI C&DH. This interface includes the peak-up mode, Mode II target acquisition and verification, and the scan request flag in the Processor Interface Table (PIT).

The ST PCS has a functional interface with the SI via the Space Telescope Operations Control Center (STOCC). This interface includes fine pointing, Modes I and III target acquisition and verification, scans, maneuvers, and solar system object tracking.

3.8.1 Fine Pointing. The SSM shall position stars in the FGS's field of view such that the target star is located in an entrance aperture of any SI with an accuracy of 0.01 arc sec. IRN 076

3.8.2 Modes I, II and III Target Acquisition and Verification. The following modes of operation are required: IRN 076

Mode I (GENSLEW) - The SI C&DH will transmit an image of the target field via the SSM to the ground control system where offset pointing corrections are computed based on the analysis of the scene and transmitted to the SSM. Real-time operation is presumed although delays in transmission can be accommodated on an infrequent basis.

Mode II (PEAKUP or INSTRUMENT ACQUISITION) - The SSM shall point the ST to a predetermined target position. The SI C&DH subsystem shall determine the exact location of the target in the SI aperture and transmit an offset correction (with respect to the SI coordinate system) to reposition the telescope. Command and data request message formats shall be established between the SSM and SI C&DH computers to insure positive control over this mode of operation.

Mode III (Type 3 "T3" Slew) - Pointing of the telescope is based on the program target coordinates alone. The locations of each aperture with respect to the field coordinates as defined by the FGSs are updated on an infrequent basis by a calibrating search scheme involving the positive acquisition of the target star by the instrument sensor.

3.8.3 Scans. The SSM PCS has capability for performing three scan modes: linear scan, continuous scan, and dwell scan. These modes are used for target acquisition and verification and for science observations.

3.8.3.1 Linear Scan. A linear scan is a slew of the ST optical axis from point A to point B on the celestial sphere at a constant commanded rate. The ST scan begins before point A and continues after point B to attain and maintain a constant rate between A and B. Pointing accuracy during linear scans is given in Fig. 3.8-1.

3.8.3.2 Continuous Scan. A continuous scan (same as serpentine or raster scan) consists of a series of linear scans alternating in direction and offset from one another by a commanded small-angle separation (see Figure 3.8-2). The principal scan direction is arbitrary with respect to the ST axes. There is a "dead-time" at the end of each linear scan line during the turn around (decelerate, small angle maneuver, accelerate). Turn-around times are given in Fig. 3.8-1.

Scan Rate (arc sec/sec)	+ST Single Axis Pointing Accuracy (arc sec rms)	Turn-around Time (sec)
0.0 - 0.02	0.020	20
0.02 - 0.21	0.030	20
0.21 - 20	* 0.2	20
20 - 40	* 1.0	60

\+ Pointing Accuracy is defined relative to the commanded ST orientation. All values do not include effects of orbit ephemeris error contributions or parallax.

* Includes Attitude Reference Drifts for scan duration of 60 sec.

Control Device	Error Contribution
FGS	0.007 sec stability (24 hours) rms
RGA	0.030 arc sec/sec drift rate rms

Figure 3.8-1 Pointing Accuracy and Stability During Scans

3.8.3.3 Dwell Scan. The dwell scan pattern is shown on Fig. 3.8-2. The basic unit of a dwell scan is a commanded incremental maneuver and a commanded dwell (integration) time. This basic unit is repeated until the number of increments is completed. A small-angle maneuver is then commanded to offset the ST optical axis to the next line where a series of basic units is repeated in the opposite direction. A dwell scan of one line only is also permitted. The science observation occurs at the dwell points.

The time required to move between dwell points as a function of angle between dwell points is given in Fig. 3.8-3.

3.8.3.4 Scan Control Parameters. The following typical parameters are provided to the SI in the downlink data.

For a linear scan, start and stop time of data collection region of each line

For a dwell scan, arrival and departure time for each dwell point for data integration purposes.

A scan must be commanded to and is executed by, the SSM computer.

3.8.3.5 Scan Times. Total scan time is composed of two parts: time spent within the scan field and turn-around time. Time within the field is determined by the scan rate for continuous scans. For dwell scans, time is determined by the integration time at each dwell point, the number of dwell points, and the distance and rate between dwell points as given in Figs. 3.8-3 and 3.8-4.

Turn-around times are given in Fig. 3.8-1.

The line change in a dwell scan is done by a small-angle maneuver with times given in Figures 3.8-3 and 3.8-4.

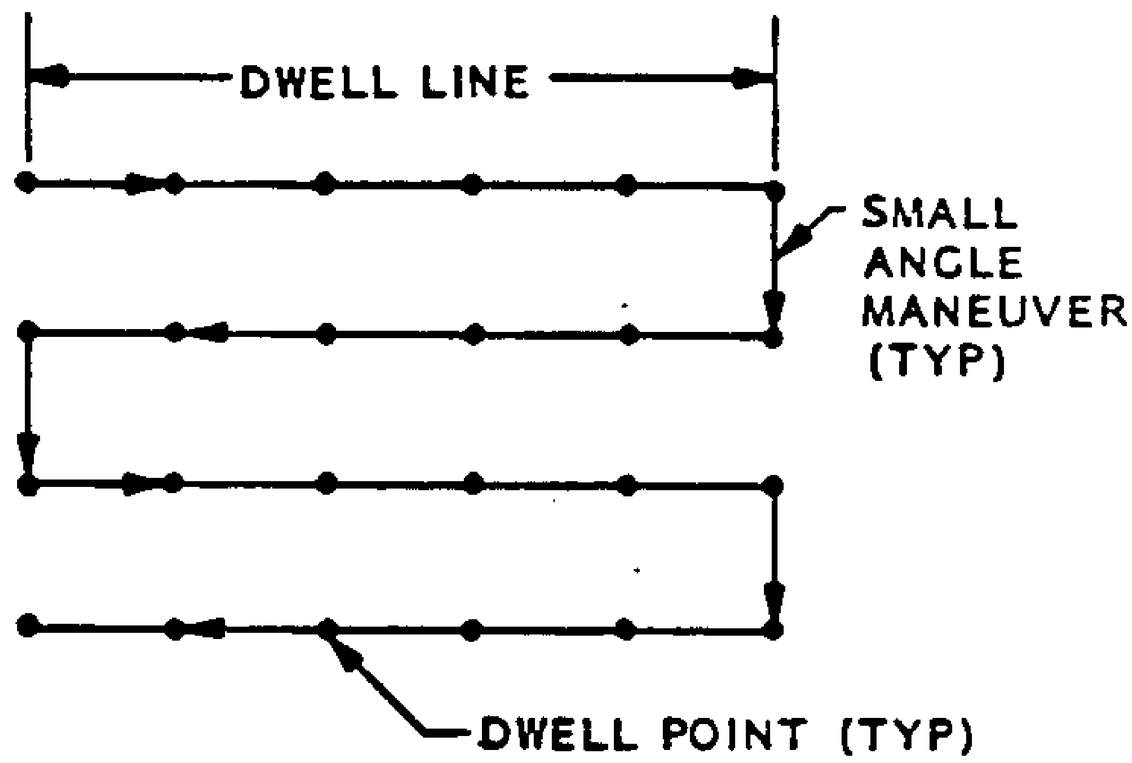

DWELL SCAN

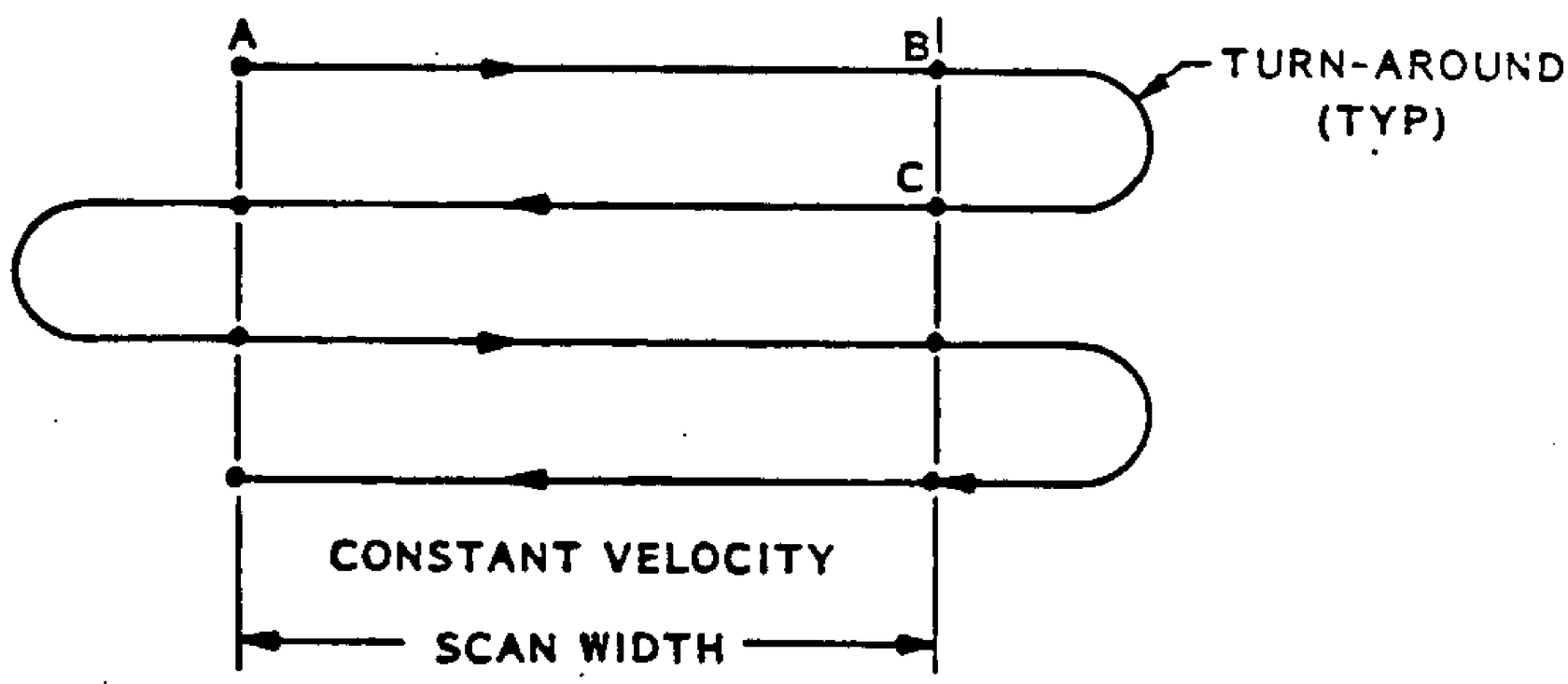

CONTINUOUS SCAN

Figure 3.8-2 Scan Patterns

3.8.3.6 Peak-up Mode. A peak-up scan consists of any scan followed by a peak-up slew. The peak-up slew is commanded by passing a time word from the SI (SI C&DH) to the SSM to identify the position of peak intensity within the scan as determined by the SI.

The SSM stores or maintains an algorithm by which to locate the equivalent of 400 points uniformly distributed within the scan.

3.8.4 Solar System Object Tracking. Solar system object tracking is the same mode as a linear scan (para. 3.8.3.1).

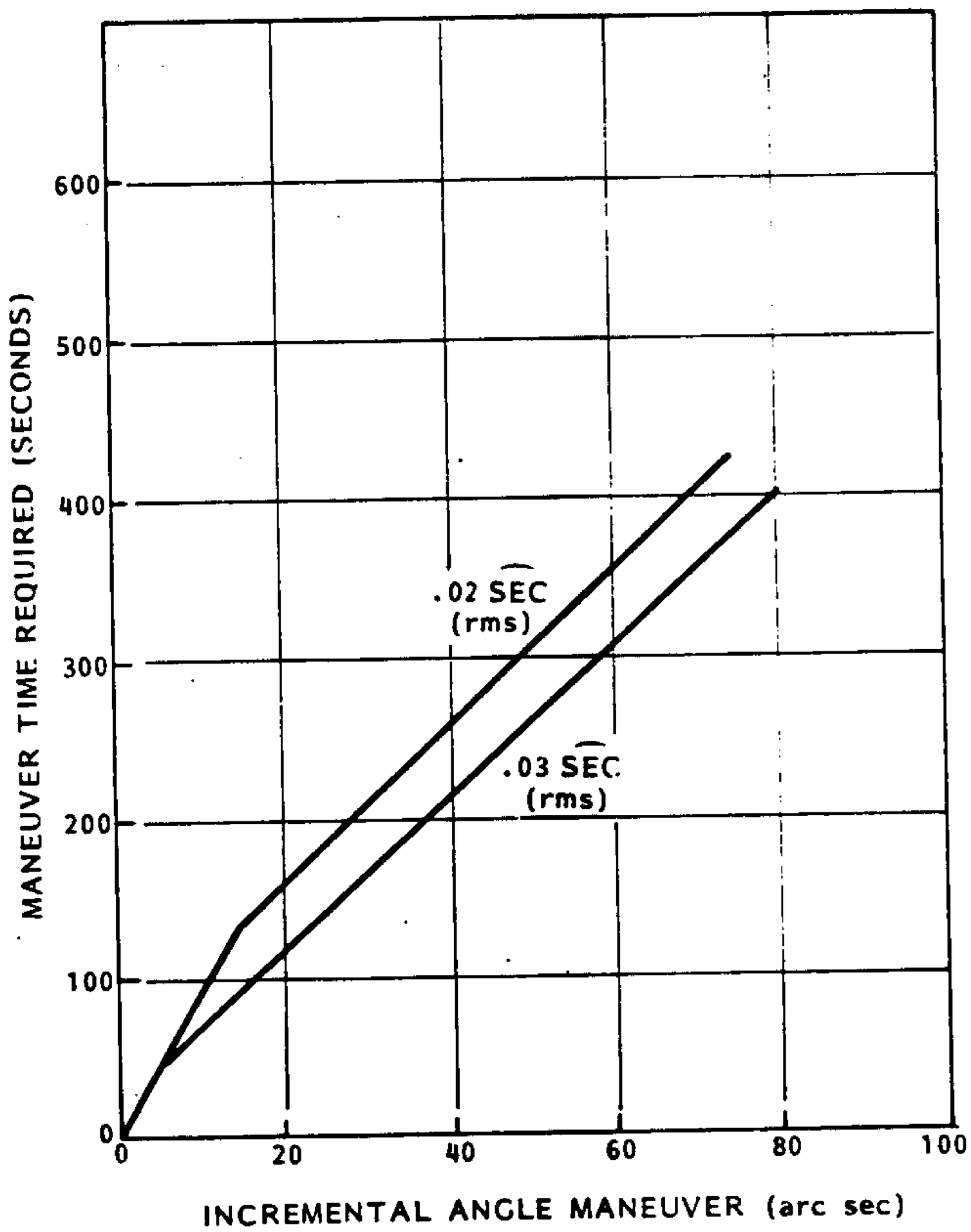

Figure 3.8-3 Maneuver Time Required To Limit Rate To 0.21 arc sec/sec

Small-Angle Maneuver (Arcsec)	Maneuver Time (Sec)
0 - 1	7
1 - 60	20
60 - 90	60

Figure 3.8-4 Preliminary Small-Angle Maneuver Times

3.9 Maneuver Characteristics. Small-angle maneuvers are for rotations of 900 arc sec or less. Time for small-angle maneuvers under RGA control are given in Fig. 3.8-4.

Time as a function of angle is given in Fig. 3.9-1 for large-angle maneuvers (greater than 900 secs).

The ST position command word resolution for all maneuvers is less than 0.002 arc sec.

The maneuver curves given apply to any axis, including roll.

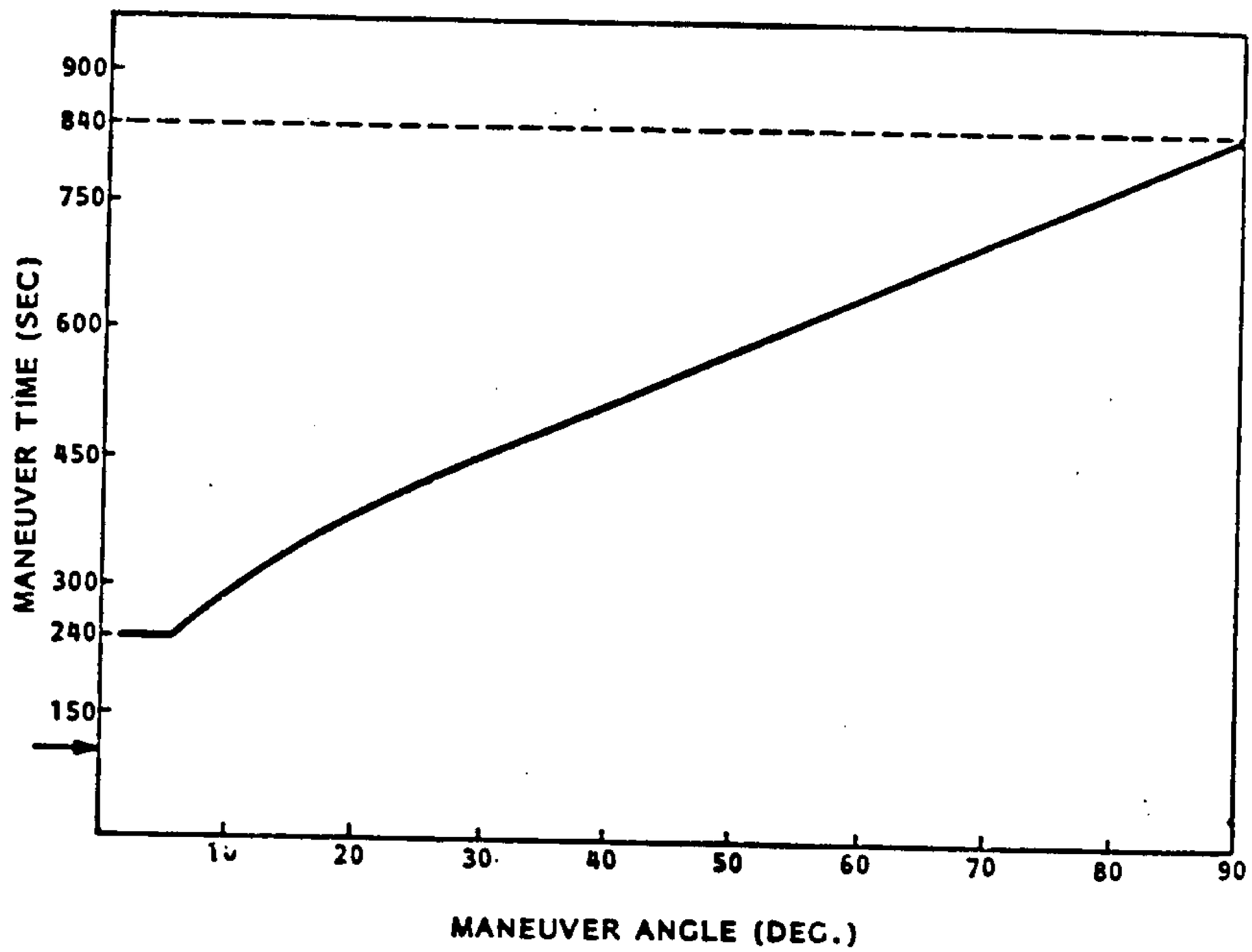

Figure 3.9-1 Maneuver Time Profile

3.10 Alignment Stability of SIs/Uncompensated Momentum. The stability of each SI (treated as a rigid body) shall be controlled by the OTA structure such that the HST image stability and pointing repeatability are obtainable. IRN 076

The requirements are:

Image stability for periods up to 24 hours = 0.007 arc sec rms. HST pointing repeatability for periods up to 100 hours = 0.01 arc sec.

These HST requirements, in terms of line of sight (LOS) errors, are allocated to the SI as shown below:

SI Stability Requirements

	Pointing Repeatability (arc sec for 100 hours)	Image Stability (arc sec rms for 24 hrs)
SI*	0.002	0.002

* NOTE: SI values are requirements only to the extent that the SI needs to take advantage of full HST capability.

The SI portion of the budgets shown in the table represent the image motion introduced within the SI by thermal/structural deformation.

SIs shall not generate dynamic disturbances which produce image stability error in excess of those required by the primary observing SI.

The boundaries of the field of view for each SI shall be defined by each SI contractor, in the SI coordinate system, to an accuracy of 0.5 mm.

The science observation may be interrupted for the movement of mechanisms internal to an SI which will induce HST pointing errors greater than 0.0007 arc sec (rms). Non-primary SIs must obtain the approval of the primary SI before performing such mechanism movements. If the HST pointing error produced by the activation of a mechanism is less than 0.0007 arc sec (rms) no approval is required.

3.11 Interface Connectors and Pin Assignments.

3.11.1 Connectors. OTA SCD No. 679-6003* (power) and 679-6010 (signal) for SIs are provided by the government and are supplied with loose contacts (10% overage) and insertion tools. Each set consists of: IRN 071

2 power receptacles,
"A" 1-Deutsch MS 3424E 27-5P (-101), containing 19 pin 16awg contacts
"B" 1-Deutsch MS 3424E 27-5PW (-102)
2 signal receptacles,
"A" 1-Deutsch DS00-37-13P (-101) containing 30 pins 20awg contacts and one coax
"B" 1-Deutsch DS00-37-13PY (-102)
1-Coax Pin contact: 0106-003-001

One pin in each radial SI harness connector to be made available for use with a visual indicator in order to provide verification that each of the radial SI connectors have been correctly re-mated during in-orbit changeout operations.

MATING PLUGS (for flight configuration cables)*

2 Power Connectors
"A" MS 3446 E27-5S (-201)
"B" MS 3446 E27-5SW (-202)
2 Signal Connectors
"A" DS09-37-13S (-201)
"B" DS09-37-13SY (-202)
Test (N/A)

*Reference only - not supplied to SI Contractors.

LMSC RELEASED CONTROLLED

3.11.2 Pin Assignments. Each redundant power connector contains the connections as indicated in Tables 3.11-1 and 3.11-2.

Each redundant signal/command connector contains the connections as indicated in Tables 3.11-3 and 3.11.4.

TABLE 3.11-1

POWER CONNECTOR "A"

Function	Pin List
POWER BUS	1
POWER RETURN	2
POWER BUS	3
POWER RETURN	4
REMOTE INTERFACE UNIT PWR BUS	5
REMOTE INTERFACE UNIT PWR RETURN	6
REMOTE INTERFACE UNIT PWR BUS	7
REMOTE INTERFACE UNIT PWR RETURN	8
SPARE	9
SPARE	10
SPARE	11
SPARE	12
SPARE	13
SPARE	14
SPARE	15
SPARE	16
SPARE	17
SPARE	18
SHORTING WIRE TO CONTACT 19 IN POWER CONNECTOR B	19

TABLE 3.11-2

POWER CONNECTOR "B"

Function	Pin List
POWER BUS	1
POWER RETURN	2
POWER BUS	3
POWER RETURN	4
REMOTE INTERFACE UNIT PWR BUS	5
REMOTE INTERFACE UNIT PWR RETURN	6
REMOTE INTERFACE UNIT PWR BUS	7
REMOTE INTERFACE UNIT PWR RETURN	8
SPARE	9
SPARE	10
SPARE	11
SPARE	12
SPARE	13
SPARE	14
SPARE	15
SPARE	16
SPARE	17
SPARE	18
SHORTING WIRE TO CONTACT 19 IN POWER CONNECTOR A	19

TABLE 3.11-3

SIGNAL/COMMAND "A" CONNECTOR

Function	Pin Assignment
Signal Ground	1
Science Data Ready True	2
Science Data Ready Complement	3
Science Data Gate True	4
Science Data Gate Complement	5
Science Data Clock True	6
Science Data Clock Complement	7
Science Data True	8
Science Data Complement	9
Line Start True	10
Line Start Complement	11
Frame Start True	12
Frame Start Complement	13
Common Shield	14
Supervisory Bus "A" True	15
Supervisory Bus "A" Complement	16
Supervisory Bus "A" Shield	17
Reply Bus "A" True	18
Reply Bus "A" Complement	19
Reply Bus "A" Shield	20
Spares	21
Spares	22
Spares	23
Spares	24
Spares	25
Common Shield	26
6.144 MHz Clock Return	27
6.144 MHz Clock	28
Common Shield	29
Shorting Wire to Contact 30 in Signal/Command Connector B	30
Spare (coax)	31

TABLE 3.11-4

SIGNAL/COMMAND "B" CONNECTOR

Function	Pin Assignment
Signal Ground	1
Science Data Ready True	2
Science Data Ready Complement	3
Science Data Gate True	4
Science Data Gate Complement	5
Science Data Clock True	6
Science Data Clock Complement	7
Science Data True	8
Science Data Complement	9
Line Start True	10
Line Start Complement	11
Frame Start True	12
Frame Start Complement	13
Common Shield	14
Supervisory Bus "B" True	15
Supervisory Bus "B" Complement	16
Supervisory Bus "B" Shield	17
Reply Bus "B" True	18
Reply Bus "B" Complement	19
Reply Bus "B" Shield	20
Spares	21
Spares	22
Spares	23
Spares	24
Spares	25
Common Shield	26
6.144 MHz Clock Return	27
6.144 MHz Clock	28
Common Shield	29
Shorting Wire to Contact 30 in Signal/Command Connector A	30
Spare (coax)	31

3.12 SI Math Models.

3.12.1 Structural Math Models. The SI structural models provided by SI Contractors to the HST Project shall be simplified representations of the detailed models used by SI Contractors in the design, development and performance analysis of the instruments.

The first lateral and torsion modes determined from these simplified models shall agree within ± 3 %, with those predicted by the more detailed models. Agreement is determined by comparing natural frequency and modal effective weight properties.

The simplified models shall be a reduced model using, for example, NASTRAN ASET reduction technique. The simplified model shall consist of up to 900 degrees of freedom. The model must be able to predict motion of major mass items and all elements in the optical path(s). Data shall be transmitted by magnetic tape (9-track, 1600 BPI, fixed record format, logical record length = 80, blocksize = 800). IRN 071

In addition, the output data from the more detailed model shall be supplied for comparison to the simplified model data.

3.12.2 Thermal Math Models. The SI thermal models provided by SI Contractors to the HST Project shall be simplified representations of the detailed models used by SI Contractors in the design, development and performance analysis of the instruments.

The simplified thermal models shall be in SINDA format snd shall consist of a maximum of 100 nodes including one node for each of the 3 FPS attachment point interfaces. The models shall be transmitted in the form of a diskette with a listing of the bulk data, a nodal schematic and a sample analysis output. Temperature dependent functions such as heaters, louvers, etc., shall be clearly indicated. The model represents all the power modes of section 3.6.1.1.5; Operational, and hold as a minimum.

In addition, the output data from the more detailed model shall be supplied for comparison to the simplified model data.

DISC RELEASED CONTROLLED

10 APPENDIX

10.1 WF/PC Deviations and Waivers. The Wide Field and Planetary Camera (WFPC), STE-08, is relieved from the requirements of this ICD to the extent shown on the NASA approved Jet Propulsion Laboratory (JPL) deviations and waiver requests listed below and included on the following pages.

The Wide Field and Planetary Camera II (WFPC-II), STE-26, is relieved from the requirements of this ICD to the extent shown on the NASA approved JPL deviation and waiver requests listed below and included on the following pages. IRN 078

The Wide Field Camera 3 (WFC3), STE-66, is relieved from the requirements of this ICD to the extent shown on the NASA approved deviation and waiver requests listed below and included on the following pages.

10.1.1	Holes for Tools in External Radiator, Deviation No. WF/PC-002	10.1-2	
10.1.2	Random Mechanical Vibration & Acoustic Loads, Deviation No. WF/PC-004	10.1-3	
10.1.3	Acoustic Loads - External Radiator, Deviation No. WF/PC-005	10.1-5	
10.1.4	WF/PC EMC Requirements, Deviation No. WF/PC-008	10.1-7	IRN 047
10.1.5	WF/PC EMC Requirements Waiver	10.1-9	IRN 051
10.1.6	WF/PC Radiated Susceptibility, Deviation No. WF/PC-010	10.1-10	IRN 052
10.1.7	WF/PC Power Allocation Increase, Deviation No. LMSC-139	10.1-12	IRN 053
10.1.8	WF/PC UV Flooding Mass Increase Waiver	10.1-13	IRN 056
10.1.9	WF/PC EMC Requirements	10.1-14	IRN 057
10.1.10	WF/PC Power Allocation	10.1-16	IRN 060
10.1.11	WF/PC Power Allocation	10.1-30	IRN 062
10.1.12	WF/PC Multi-layer Insulation Deviation (JPL-DAR-016)	10.1-48	IRN 065
10.1.13	WF/PC Power Allocation DAR 015	10.1-50	IRN 066
10.1.14	WF/PC-2 Shear Pin Hole Diameter DAR-017	10.1-67	IRN 069
10.1.15	WF/PC-II EMC Requirements DAR-018	10.1-72	IRN 072
10.1.16	WF/PC-II Magnetic Requirements DAR-019	10.1-73	IRN 072
10.1.17	WF/PC-II EMC Requirements DAR-020	10.1-74	IRN 072
10.1.18	WF/PC-II Static Envelope DAR-021	10.1-75	IRN 072
10.1.19	WF/PC-II Peak Power DAR-023	10.1-79	IRN 074
10.1.20	WFC3 Weight Waiver (WFC3-W-002)	10.1-88	IRN 078
10.1.21	WFC3 Thermal Coating Waiver (WFC3-W-004)	10.1-89	IRN 079

DEVIATION APPROVAL REQUEST PIRN 3110 SHEET 1 OF 1

(1 of 1)

ST-ICD-03F
29 June 1984

1. FOR: [X] DEVIATION [ ] SUMMARY OF MINOR NONCONF

2. FROM CONTRACTOR: JPL (Wide Field/Planetary Camera)

3. CONTRACT NUMBER: NAS 7-100

4. REQUEST NUMBER: 002

5. NOMENCLATURE: CM-08 Radial SI to OTA and SSM

6. NUMBER: ST-ICD-03 LMSC 4171774

7. REVISION: D

8. DATE: 8-5-80

9. NONCONFORMANCE: [ ] MINOR [X] MAJOR

10. MRB ACTION NO.: N/A

11. SERIAL NUMBER(S): N/A

12. LOT NUMBER: N/A

13. QUANTITY: N/A

14. SUPPLIER OR SUBCONTRACTOR (GIVE NAME AND ADDRESS): Je. Propulsion Laboratory, 4800 Oak Grove Drive, Pasadena, California 91103

15. SPECIFIED REQUIREMENTS:

Figure 3.3-5 Latching mechanism interface,

Figure 3.3-13 Radial SI Electrical

Connector Bracket Interface:

Requirement for 1.5" Diameter Hole for

Tool Lead-In.

16. DESCRIPTION OF DEPARTURE FROM REQUIREMENTS:

Change hole diameters to 1.00" (Figure 3.3-5) and 1.13" (Figure 3.3-13)

17. REASON FOR REQUEST AND/OR CORRECTIVE ACTION TAKEN:

Current WF/PC design does not permit larger lead-in holes through radiator

18. REMARKS:

Design was completed prior to definition of requirement for 1.5" hole. Redesign will have significant cost and schedule impact.

19. CONTRACTOR CERTIFICATION: THE CONTRACTOR HEREBY CERTIFIES THAT THE ABOVE DESCRIBED DEVIATION IS A DEPARTURE FROM THE CONTRACTUAL REQUIREMENTS IN THE QUANTITIES AND/OR CONDITIONS AS STATED ABOVE.

[ ] _____ COST ADJUSTMENT (EXPLAIN)

[X] NO COST ADJUSTMENT

WF/PC Project Manager — TITLE

SIGNATURE OF AUTHORIZED REPRESENTATIVE — DATE 8/5/80

20. GOVERNMENT QUALITY ASSURANCE REPRESENTATIVE COMMENTS:

TITLE — SIGNATURE — DATE

21. MSFC REVIEW:

ORGANIZATION SYMBOL	REPRESENTATIVE	CONCURRENCE	NON-CONCURRENCE	DATE

22. CONTRACTING OFFICER'S REPRESENTATIVE OR OTHER DULY DELEGATED AUTHORITY:

[ ] DISAPPROVAL (RECOMMENDED)

[ ] APPROVAL (RECOMMENDED) (WITH) (WITHOUT) PRICE ADJUSTMENT. $ _____

SIGNATURE — DATE

23. CONTRACTING OFFICER:

[ ] APPROVED

[ ] DISAPPROVED

[ ] SUBJECT TO CONDITIONS STATED ON MSFC FORM _____-1.

SIGNATURE — DATE

MSFC-[illegible] (Rev Mar 1969)

ORIGINAL

DEVIATION APPROVAL REQUEST

ST-ICD-03F

1. FOR: [X] DEVIATION [ ] SUMMARY OF MINOR NONCONFORMANCES

29 June 1984

FROM CONTRACTOR:	3. CONTRACT NUMBER:	4. REQUEST NUMBER:
JPL (Wide Field / Planetary Camera)	NAS 7-100	004

5. NOMENCLATURE:	6. NUMBER:	7. REVISION:	8. DATE:
CM 08 Radial SI to OTA and SSM	ST ICD-03 LMSC 4171774	D	05-16-80

9. NONCONFORMANCE:	10. MRB ACTION NO.:	11. SERIAL NUMBER(S):	12. LOT NUMBER:	13. QUANTITY:
[ ] MINOR [X] MAJOR	N/A	N/A	N/A	N/A

14. SUPPLIER OR SUBCONTRACTOR (GIVE NAME AND ADDRESS):

Jet Propulsion Laboratory, 4800 Oak Grove Drive, Pasadena, California 91103

15. SPECIFIED REQUIREMENTS:

Para. 3.5.1.6 and Fig. 3.5-1:
Random Mechanical Vibration

Para. 3.5.1.7 and Fig. 3.5-2:
Acoustic Loads

16. DESCRIPTION OF DEPARTURE FROM REQUIREMENTS:

Use the Acoustic and Random Vibration Values listed on the attached sheets in place of those listed in the ICD.

17. REASON FOR REQUEST AND/OR CORRECTIVE ACTION TAKEN:

Based on the analysis performed at JPL, the attached curves are more nearly correct for the WF/PC environment.

REMARKS:

The rationale for this request is documented in JPL IOM 3576-80-40, which was transmitted to GSFC on 15 April 1980 (DFM #462). JPL has proceeded in its Environmental Qualification program using these levels. While the overall acoustic levels are actually

19. CONTRACTOR CERTIFICATION: THE CONTRACTOR HEREBY CERTIFIES THAT THE ABOVE DESCRIBED DEVIATION IS A DEPARTURE FROM THE CONTRACTUAL REQUIREMENTS IN THE QUANTITIES AND/OR CONDITIONS AS STATED ABOVE.

[ ] _____ COST ADJUSTMENT (EXPLAIN)

[X] NO COST ADJUSTMENT

Dir Mgr. — TITLE

SIGNATURE OF AUTHORIZED REPRESENTATIVE

Feb 6 1981 — DATE

20. GOVERNMENT QUALITY ASSURANCE REPRESENTATIVE COMMENTS:

TITLE SIGNATURE DATE

21. MSFC REVIEW:

ORGANIZATION SYMBOL	REPRESENTATIVE	CONCURRENCE	NON-CONCURRENCE	DATE

22. CONTRACTING OFFICER'S REPRESENTATIVE OR OTHER DULY DELEGATED AUTHORITY:

[ ] DISAPPROVAL (RECOMMENDED)

[ ] APPROVAL (RECOMMENDED)(WITH) (WITHOUT) PRICE ADJUSTMENT. $ _____

SIGNATURE DATE

23. CONTRACTING OFFICER:

[ ] APPROVED

[ ] DISAPPROVED

[ ] SUBJECT TO CONDITIONS STATED ON MSFC FORM _____-1.

10.1-3

5

SIGNATURE DATE

18. Remarks (continued)

higher than the ICD, the change in spectral distribution results in significantly lower levels for critical assemblies within the Instrument. With respect to the random vibration at the attach fittings, the overall level (as well as the high frequency level) is lower. In addition the levels originally supplied by JPL included a 4 dB design margin, which was not intended to be used in the ICD.

It is assumed, in requesting approval of these new environments, that the instrument will not be subjected to higher levels during the ST System Environmental Test.

If this Deviation Request is disapproved, there will be a major impact on the WF/PC Program, including re-test and possible re-design of several subassemblies.

TABLE I

Revised Random Vibration Input at WF/PC Attachment Fittings

Frequency (Hz)	Level
20 - 80	+ 5 dB/Octave
80 - 300	0.008 G^2/Hz
300 - 2000	- 9 dB/Octave
Overall	1.8 G rms

DEVIATION APPROVAL REQUEST

SHEET 1 OF ___

ST-ICD-03F

1. FOR: [X] DEVIATION [ ] SUMMARY OF MINOR NONCONFORMANCES

29 June 1984

ROM CONTRACTOR:	3. CONTRACT NUMBER:	4. REQUEST NUMBER:
JPL (Wide Field/Planetary Camera)	NAS 7-100	005

5. NOMENCLATURE:	6. NUMBER:	7. REVISION:	8. DATE:
CM 08 Radial SI OTA and SSM	ST ICD 03 LMSC 4171774	D	5-16-80

9. NONCONFORMANCE:	10. MRB ACTION NO.:	11. SERIAL NUMBER(S):	12. LOT NUMBER:	13. QUANTITY:
[ ] MINOR [X] MAJOR				

14. SUPPLIER OR SUBCONTRACTOR (GIVE NAME AND ADDRESS):

Jet Propulsion Laboratory, 4800 Oak Grove Drive, Pasadena, California 91103

15. SPECIFIED REQUIREMENTS:

Para. 3.5.1.7 and Fig. 3.5-2

Acoustic Loads

16. DESCRIPTION OF DEPARTURE FROM REQUIREMENTS:

Use the Acoustic Environment specified in Attachment (1) in place of those listed in the ICD.

17. REASON FOR REQUEST AND/OR CORRECTIVE ACTION TAKEN:

Reduced acoustic levels for the external radiator will result in lower hardware risk during WF/PC System Level Acoustic Test.

18. REMARKS:

See also DAR 004. This DAR (005) requests an additional change to the Acoustic levels for the External Radiator only. No change to the internal levels or the mechanical vibration is requested.

19. CONTRACTOR CERTIFICATION: THE CONTRACTOR HEREBY CERTIFIES THAT THE ABOVE DESCRIBED DEVIATION IS A DEPARTURE FROM THE CONTRACTUAL REQUIREMENTS IN THE QUANTITIES AND/OR CONDITIONS AS STATED ABOVE.

[ ] _____ COST ADJUSTMENT (EXPLAIN)

[X] NO COST ADJUSTMENT

Project Manager — TITLE

SIGNATURE OF AUTHORIZED REPRESENTATIVE

16 Feb. 1981 — DATE

20. GOVERNMENT QUALITY ASSURANCE REPRESENTATIVE COMMENTS:

TITLE — SIGNATURE — DATE

21. MSFC REVIEW:

ORGANIZATION SYMBOL	REPRESENTATIVE	CONCURRENCE	NON-CONCURRENCE	DATE

22. CONTRACTING OFFICER'S REPRESENTATIVE OR OTHER DULY DELEGATED AUTHORITY:

[ ] DISAPPROVAL (RECOMMENDED)

[ ] APPROVAL (RECOMMENDED)(WITH) (WITHOUT) PRICE ADJUSTMENT. $ _____

SIGNATURE — DATE

23. CONTRACTING OFFICER:

[ ] APPROVED

[ ] DISAPPROVED

[ ] SUBJECT TO CONDITIONS STATED ON MSFC FORM _____-1.

10.1-5

SIGNATURE — DATE

TABLE II

(Reflecting combined DAR 004 & 005 acoustic levels.)

1/3 Octave Band Center Frequency (Hz)	Sound Pressure Level (dB) Ref. 2×10^{-5} N/m^2 Radiator External Radiator Only (Acceptance)	Interior of AFT Shroud (Acceptance)
31.5	131.5	122
40	133.5	127
50	135.5	128
63	137	129
80	137	129
100	135	129
125	133	128
160	133	128.5
200	133	129
250	133	128
315	133	126
400	133	124.5
500	131.5	122.5
630	130.5	121
800	129	118.5
1000	127.5	116
1250	126.5	114.5
1600	125.5	111
2000	124	105
2500	122.5	100
3150	121.5	94.5
4000	120.5	89.5
5000	119	85
6300	117.5	-
8000	116.5	-
10000	115	-
Overall	146.0	139

ST-ICD-03F
20 November 198-
IRN 47

DEVIATION APPROVAL REQUEST

FCR: [XX] DEVIATION [ ] SUMMARY OF MINOR NONCONFORMANCES

1. FROM CONTRACTOR:	3. CONTRACT NUMBER:	4. REQUEST NUMBER:
JPL - WF/PC	ST-ICD-03 E SSM/OTA/SI	008

5. NOMENCLATURE:	6. NUMBER:	7. REVISION:	8. DATE:
WF/PC EMC Requirements	ST-ICD-03 SSM/OTA/SI	E	5/30/84

9. NONCONFORMANCE:	10. MRB ACTION NO.:	11. SERIAL NUMBER(S):	12. LOT NUMBER:	13. QUANTITY:
[XX] MINOR [ ] MAJOR	N/A	N/A	N/A	N/A

14. SUPPLIER OR SUBCONTRACTOR (GIVE NAME AND ADDRESS):

JPL, 4800 Oak Grove Drive, Pasadena, CA

15. SPECIFIED REQUIREMENTS:

ST-ICD-03

Para. 3.7.8.3 SI Generated Ripple and Noise

16. DESCRIPTION OF DEPARTURE FROM REQUIREMENTS:

See Sheet 2 for deviation.

APPROVAL LIMITED TO CONDUCTED EMISSIONS ONLY

17. REASON FOR REQUEST AND/OR CORRECTIVE ACTION TAKEN:

See Sheet 2.

18. REMARKS:

WF/PC design has been modified to include an EMC filter on the input power lines. Any other corrective action would require significant resources to correct.

19. CONTRACTOR CERTIFICATION: THE CONTRACTOR HEREBY CERTIFIES THAT THE ABOVE DESCRIBED DEVIATION IS A DEPARTURE FROM THE CONTRACTUAL REQUIREMENTS IN THE QUANTITIES AND/OR CONDITIONS AS STATED ABOVE.

[ ] _____ COST ADJUSTMENT (EXPLAIN)

[XX] NO COST ADJUSTMENT

TITLE _____ SIGNATURE OF AUTHORIZED REPRESENTATIVE /s/ DATE 6-1-84

20. GOVERNMENT QUALITY ASSURANCE REPRESENTATIVE COMMENTS:

Retyped by MSFC for clarity

TITLE _____ SIGNATURE _____ DATE _____

21. MSFC REVIEW:

ORGANIZATION SYMBOL	REPRESENTATIVE	CONCURRENCE	NON-CONCURRENCE	DATE

22. CONTRACTING OFFICER'S REPRESENTATIVE OR OTHER DULY DELEGATED AUTHORITY:

[ ] DISAPPROVAL (RECOMMENDED)

[ ] APPROVAL (RECOMMENDED)(WITH) (WITHOUT) PRICE ADJUSTMENT. $ _____

SIGNATURE _____ DATE _____

23. CONTRACTING OFFICER:

[ ] APPROVED

[ ] DISAPPROVED

[ ] SUBJECT TO CONDITIONS STATED ON MSFC FORM _____-1.

(NEW PAGE CREATED BY IRN 47)

SIGNATURE _____ DATE _____

DAR #008

16. Description of Departure from Requirements

ST-ICD-03 Limits	WF/PC Test Results
Para. 3.7.8.3 SI Generated Ripple and Noise Fig. 3.7-4 (Page 3.7-8)	o WF/PC conducted emissions exceed ICD narrowband specification at 1.3 MHz by 10 db. Meets broadband limits.

17. Reason for Request

The approval of the above deviations will result in no change to WF/PC flight hardware, other than that presently planned for the EMC filter box. Generated emissions are not considered degrading to the WF/PC. However, other ST elements should be considered. The conducted susceptibility thresholds are only out of specification by a few db and are not considered significant. EMC testing during A & V should resolve any incompatibilities.

(NEW PAGE CREATED BY IRN 47)

ST-ICD-03F
29 June 1984
IRN 51
28 August 1985

DEVIATION APPROVAL REQUEST

FOR: [XX] ~~XXXXXXXX~~ Waiver [ ] SUMMARY OF MINOR NONCONFORMANCES

1. FROM CONTRACTOR:	3. CONTRACT NUMBER:	4. REQUEST NUMBER:
D.L. Fortna, GSFC Code/302	ST-ICD-03 SSM/OTA/SI	CCR 1165 PIRN 3177

5. NOMENCLATURE:	6. NUMBER:	7. REVISION:	8. DATE:
WFPC EMC Requirements	ST-ICD-03 SSM/OTA/SI	PCN AN1469	12-3-84

9. NONCONFORMANCE:	10. MRB ACTION NO.:	11. SERIAL NUMBER(S):	12. LOT NUMBER:	13. QUANTITY:
[ ] MINOR [XX] MAJOR	N/A	N/A	N/A	N/A

14. SUPPLIER OR SUBCONTRACTOR (GIVE NAME AND ADDRESS):

JPL, 4800 Oak Grove Drive, Pasadena, Calif.

15. SPECIFIED REQUIREMENTS:

ST-ICD-03
Para. 3.7.8.8 Radiated Electric Field Emissions (PCN-AN1469)

16. DESCRIPTION OF DEPARTURE FROM REQUIREMENTS:

BB radiated emissions exceeded the ICD limits from 6.2 to 25 MHz by 7 db.
NB radiated emissions exceeded the ICD limits from 22 KHz to 32 KHz by 10 db and from 5.6 MHz to 25 MHz by 28 db at 5.5 MHz and declining in amplitude to 8 db above space limits at 25 MHz.

17. REASON FOR REQUEST AND/OR CORRECTIVE ACTION TAKEN: Corrective action would require major disassembly of the instrument to modify cable harnesses and components to add additional cable shielding [illegible] EMI filters. This effort would be very expensive and cause long delays in the availi- b[illegible]y of the instrument for integration into the ST spacecraft.

18. REMARKS:

19. CONTRACTOR CERTIFICATION: THE CONTRACTOR HEREBY CERTIFIES THAT THE ABOVE DESCRIBED DEVIATION IS A DEPARTURE FROM THE CONTRACTUAL REQUIREMENTS IN THE QUANTITIES AND/OR CONDITIONS AS STATED ABOVE.

[ ] _____ COST ADJUSTMENT (EXPLAIN)
[ ] NO COST ADJUSTMENT

TITLE _____ SIGNATURE OF AUTHORIZED REPRESENTATIVE _____ DATE _____

20. GOVERNMENT QUALITY ASSURANCE REPRESENTATIVE COMMENTS:

TITLE _____ SIGNATURE _____ DATE _____

21. MSFC REVIEW:

ORGANIZATION SYMBOL	REPRESENTATIVE	CONCURRENCE	NON-CONCURRENCE	DATE

CONTRACTING OFFICER'S REPRESENTATIVE OR OTHER DULY DELEGATED AUTHORITY:

[ ] DISAPPROVAL (RECOMMENDED)
[ ] APPROVAL (RECOMMENDED)(WITH) (WITHOUT) PRICE ADJUSTMENT. $ _____

SIGNATURE _____ DATE _____

23. CONTRACTING OFFICER:

[ ] APPROVED
[ ] DISAPPROVED
[ ] SUBJECT TO CONDITIONS STATED ON MSFC FORM _____-1.

(New Page created by IRN 51)

SIGNATURE _____ DATE _____

ST-ICD-03F
29 June 1984
IRN 52
06 September 1985

DEVIATION APPROVAL REQUEST

☐ SUMMARY OF MINOR NONCONFORMANCES

2: [XX] DEVIATION

FROM CONTRACTOR:	3. CONTRACT NUMBER:	4. REQUEST NUMBER:
JPL - WF/PC	ST-ICD-03E SSM/OTA/SI	010

5. NOMENCLATURE:	6. NUMBER:	7. REVISION:	8. DATE:
WF/PC EMC Requirements	ST-ICD-03 SSM/OTA/SI	E	5/30/84

9. NONCONFORMANCE:	10. MRB ACTION NO.:	11. SERIAL NUMBER(S):	12. LOT NUMBER:	13. QUANTITY:
[XX] MINOR ☐ MAJOR	N/A	N/A	N/A	N/A

14. SUPPLIER OR SUBCONTRACTOR (GIVE NAME AND ADDRESS):

JPL, 4800 Oak Grove Drive, Pasadena, CA

15. SPECIFIED REQUIREMENTS:	16. DESCRIPTION OF DEPARTURE FROM REQUIREMENTS:
ST-ICD-03 Para. 3.7.8.7 Radiated Susceptibility	See Sheet 2 for deviation

17. REASON FOR REQUEST AND/OR CORRECTIVE ACTION TAKEN:

See Sheet 2

18. REMARKS:

WF/PC design has been mocified to include an EMC filter on the input power lines. Any other corrective action would require significant resources to correct.

19. CONTRACTOR CERTIFICATION: THE CONTRACTOR HEREBY CERTIFIES THAT THE ABOVE DESCRIBED DEVIATION IS A DEPARTURE FROM THE CONTRACTUAL REQUIREMENTS IN THE QUANTITIES AND/OR CONDITIONS AS STATED ABOVE.

☐ _____ COST ADJUSTMENT (EXPLAIN)
☐ NO COST ADJUSTMENT

_____ TITLE /s/ SIGNATURE OF AUTHORIZED REPRESENTATIVE 6/1/84 DATE

20. GOVERNMENT QUALITY ASSURANCE REPRESENTATIVE COMMENTS:

Retyped by MSFC for clarity

_____ TITLE _____ SIGNATURE _____ DATE

21. MSFC REVIEW:

ORGANIZATION SYMBOL	REPRESENTATIVE	CONCURRENCE	NON-CONCURRENCE	DATE

CONTRACTING OFFICER'S REPRESENTATIVE OR OTHER DULY DELEGATED AUTHORITY:

☐ DISAPPROVAL (RECOMMENDED)
☐ APPROVAL (RECOMMENDED)(WITH) (WITHOUT) PRICE ADJUSTMENT. $ _____

_____ SIGNATURE _____ DATE

23. CONTRACTING OFFICER:

☐ APPROVED (New Page created by IRN 52)
☐ DISAPPROVED
☐ SUBJECT TO CONDITIONS STATED ON MSFC FORM _____-1.

/s/ Elizabeth Anstin SIGNATURE 1/16/85 DATE

MSFC Form 443 (Rev. May 1968)

DAR #010

16. Description of Departure from Requirements

ST-ICD-03 Limits	WF/PC Test Results
Para. 3.7.8.7 Radiated Susceptibility	o WF/PC is susceptible to 0.25 volts/meter at 52.6 to 53.7 MHz; 0.5 volts/meter at 80 to 85 MHz. (Spec. in these ranges is 1 volt/meter); and 5 volts/meter from 2 GHz to 3 GHz. (Spec. limit is 5 volts/meter.)

17. Reason for Request

The approval of the above deviations will result in no change to WF/PC flight hardware, other than that presently planned for the EMC filter box. Generated emissions are not considered degrading to the WF/PC. However, other ST elements should be considered. The conducted susceptibility thresholds are only out of specification by a few db and are not considered significant. EMC testing during A & V should resolve any incompatibilities.

(New Page created by IRN 52)

DEVIATION APPROVAL REQUEST

1. FOR: [XX] DEVIATION [ ] SUMMARY OF MINOR NONCONFORMANCES

2. FROM CONTRACTOR: LMSC

3. CONTRACT NUMBER:

4. REQUEST NUMBER: LMSC-139

5. NOMENCLATURE: WF/PC Power Allocation Increase

6. NUMBER:

7. REVISION:

8. DATE: Nov. 11, 1985

9. NONCONFORMANCE: [XX] MINOR [ ] MAJOR

10. MRB ACTION NO.:

11. SERIAL NUMBER(S):

12. LOT NUMBER:

13. QUANTITY:

14. SUPPLIER OR SUBCONTRACTOR (GIVE NAME AND ADDRESS):

15. SPECIFIED REQUIREMENTS: ST-ICD-03F

3.7 The power consumed by the SI, including any peak power excursions, does not exceed 150 watts (average over one-orbit period).

16. DESCRIPTION OF DEPARTURE FROM REQUIREMENTS:

The power consumed by the WF/PC, including any peak power excursions, shall be allowed to exceed 150 watts, to a maximum of 173 watts, subject to the availability of sufficient HST electrical power and operational considerations.

17. REASON FOR REQUEST AND OR CORRECTIVE ACTION TAKEN:

Required power for the WF/PC is increased, due to the need to operate both cameras simultaneously and the need for thermal-electric cooling to maintain "UV conditioned" performance of the instrument.

18. REMARKS:

Without a power allocation increase, the continuous cooling cannot be maintained. The UV "conditioned" status of the instrument will degrade more rapidly, requiring more frequent UV exposure (manipulation of the spacecraft).

19. CONTRACTOR CERTIFICATION: THE CONTRACTOR HEREBY CERTIFIES THAT THE ABOVE DESCRIBED DEVIATION IS A DEPARTURE FROM THE CONTRACTUAL REQUIREMENTS IN THE QUANTITIES AND/OR CONDITIONS AS STATED ABOVE.

[ ] _____ COST ADJUSTMENT (EXPLAIN)

[XX] NO COST ADJUSTMENT

TITLE _____ SIGNATURE OF AUTHORIZED REPRESENTATIVE _____ DATE _____

20. GOVERNMENT QUALITY ASSURANCE REPRESENTATIVE COMMENTS:

Retyped by MSFC for clarity

TITLE _____ SIGNATURE _____ DATE _____

21. MSFC REVIEW:

ORGANIZATION SYMBOL	REPRESENTATIVE	CONCURRENCE	NON-CONCURRENCE	DATE

22. CONTRACTING OFFICER'S REPRESENTATIVE OR OTHER DULY DELEGATED AUTHORITY:

[ ] DISAPPROVAL (RECOMMENDED)

[ ] APPROVAL (RECOMMENDED)(WITH) (WITHOUT) PRICE ADJUSTMENT. $ _____

SIGNATURE _____ DATE _____

23. CONTRACTING OFFICER:

[ ] APPROVED

[ ] DISAPPROVED

[ ] SUBJECT TO CONDITIONS STATED ON MSFC FORM _____-1.

(New Page created by IRN 53)

SIGNATURE _____ DATE _____

MSFC - Form 841 (Rev. May 1969)

DEVIATION APPROVAL REQUEST

SHEET 1 OF ____

FOR: [XX] DEVIATION [ ] SUMMARY OF MINOR NONCONFORMANCES

1. FROM CONTRACTOR:	3. CONTRACT NUMBER:	4. REQUEST NUMBER:
JPL		

5. NOMENCLATURE:	6. NUMBER:	7. REVISION:	8. DATE:
WF/PC Mass Increase	JPL 10084-800-1	F	

9. NONCONFORMANCE:	10. MRB ACTION NO.:	11. SERIAL NUMBER(S):	12. LOT NUMBER:	13. QUANTITY:
[XX] MINOR [ ] MAJOR				

14. SUPPLIER OR SUBCONTRACTOR (GIVE NAME AND ADDRESS):

Jet Propulsion Lab

15. SPECIFIED REQUIREMENTS:

ST-ICD-03 Radial SI to OTA & SSM
Section 3.5.3.1 Weight. The maximum weight of the Radial SI including the 16 lb light baffle mounted to the external radiator is 570 lb.

16. DESCRIPTION OF DEPARTURE FROM REQUIREMENTS:

Allow the weight of WF/PC to be 592 lb.

17. REASON FOR REQUEST AND OR CORRECTIVE ACTION TAKEN:

The addition of an optical UV light channel assembly to WF/PC for the QEH solution is caused a mass increase.

18. REMARKS:

Center of gravity of the new mass is within the coordinate tolerances specified in Section 3.5.3.2

19. CONTRACTOR CERTIFICATION: THE CONTRACTOR HEREBY CERTIFIES THAT THE ABOVE DESCRIBED DEVIATION IS A DEPARTURE FROM THE CONTRACTUAL REQUIREMENTS IN THE QUANTITIES AND/OR CONDITIONS AS STATED ABOVE.

[ ] _____ COST ADJUSTMENT (EXPLAIN)

[XX] NO COST ADJUSTMENT

TITLE	SIGNATURE OF AUTHORIZED REPRESENTATIVE	DATE
	/s/	1/14/86

20. GOVERNMENT QUALITY ASSURANCE REPRESENTATIVE COMMENTS:

Retyped by MSFC for clarity

TITLE	SIGNATURE	DATE

21. MSFC REVIEW:

ORGANIZATION SYMBOL	REPRESENTATIVE	CONCURRENCE	NON-CONCURRENCE	DATE

2. CONTRACTING OFFICER'S REPRESENTATIVE OR OTHER DULY DELEGATED AUTHORITY:

[ ] DISAPPROVAL (RECOMMENDED)

[ ] APPROVAL (RECOMMENDED)(WITH) (WITHOUT) PRICE ADJUSTMENT. $ _____

SIGNATURE _____ DATE _____

23. CONTRACTING OFFICER:

[ ] APPROVED

[ ] DISAPPROVED

[ ] SUBJECT TO CONDITIONS STATED ON MSFC FORM _____-1.

(New page created by IRN 56)

SIGNATURE _____ DATE _____

MSFC - Form 841 (Rev. May 1969)

ST-ICD-03F
29 June 1986
IRN 57
01 December 1986

DEVIATION APPROVAL REQUEST

1. FOR: [X] DEVIATION [ ] SUMMARY OF MINOR

2. FROM CONTRACTOR:	3. CONTRACT NUMBER:	4. REQUEST NUMBER:
JPL - WF/PC	NAS7-100	009, Rev. B

5. NOMENCLATURE:	6. NUMBER:	7. REVISION:	8. DATE:
WF/PC EMC Requirements	ST-ICD-03 (SSM/OTA/SI)	Rev. F	6/3/86

9. NONCONFORMANCE:	10. MRB ACTION NO.:	11. SERIAL NUMBER(S):	12. LOT NUMBER:	13. QUANTITY:
[X] MINOR [ ] MAJOR	N/A	N/A	N/A	N/A

14. SUPPLIER OR SUBCONTRACTOR (GIVE NAME AND ADDRESS):

JPL, 4800 Oak Grove Drive, Pasadena, CA 91109

15. SPECIFIED REQUIREMENTS:

ST-ICD-03F, para. 3.7.8.4:
"Ripple and Noise Susceptibility. The SI is not susceptible to ripple and noise on the power lines. Susceptibility limits are shown in Figure 3.7-5...."

Figure 3.7-5 shows a 1.5 Volt p-p limit for a frequency range of 30 Hz to 50 MHz.

16. DESCRIPTION OF DEPARTURE FROM REQUIREMENTS:

WF/PC is susceptible to conducted noise in the 150 Hz range. The 1.5 Volt p-p spec level corresponds to an amplitude of < 0.2 DN (1.5 e-) in the CCD imaging data, based on 12/85 EMC test results for conducted susceptibility (with the WF/PC EMC filter fix incorporated).

17. REASON FOR REQUEST AND/OR CORRECTIVE ACTION TAKEN:

Above noise spec is acceptable to WF/PC, per J. Westphal letter of 5/9/86 (see sheet 2). WF/PC design was modified and retested to include an EMC filter in the input power lines. Any further rework would require significant resources.

18. REMARKS:

The 12/85 EMC testing (conducted susceptibility) was done for the low frequency range only (30 Hz to 50 kHz), since previous EMC testing show no measurable susceptibility at higher frequencies.

19. CONTRACTOR CERTIFICATION: THE CONTRACTOR HEREBY CERTIFIES THAT THE ABOVE DESCRIBED DEVIATION IS A DEPARTURE FROM THE CONTRACTUAL REQUIREMENTS IN THE QUANTITIES AND/OR CONDITIONS AS STATED ABOVE.

[ ] _____ COST ADJUSTMENT (EXPLAIN)
[X] NO COST ADJUSTMENT

WF/PC Project Manager /s/ 6/7/86
TITLE SIGNATURE OF AUTHORIZED REPRESENTATIVE DATE

20. GOVERNMENT QUALITY ASSURANCE REPRESENTATIVE COMMENTS:

RETYPED BY MSFC FOR CLARITY

TITLE SIGNATURE DATE

21. MSFC REVIEW:

ORGANIZATION SYMBOL	REPRESENTATIVE	CONCURRENCE	NON-CONCURRENCE	DATE

22. CONTRACTING OFFICER'S REPRESENTATIVE OR OTHER DULY DELEGATED AUTHORITY:

[ ] DISAPPROVAL (RECOMMENDED)
[ ] APPROVAL (RECOMMENDED)(WITH) (WITHOUT) PRICE ADJUSTMENT. $ _____

SIGNATURE DATE

23. CONTRACTING OFFICER:

[X] APPROVED
[ ] DISAPPROVED
[ ] SUBJECT TO CONDITIONS STATED ON MSFC FORM _____-1.

(New Page created by IRN 57)

/s/Elizabeth Austin 4/15/86
SIGNATURE DATE

MSFC - Form 841 (Rev. May 1988)

DAR 009, Rev B
Sheet 2

CALIFORNIA INSTITUTE OF TECHNOLOGY

ST WIDE FIELD/PLANETARY CAMERA PROJECT

May 9, 1986

To: Dave Rodgers

From: Jim Westphal

Subject: DAR009

With the preTV5 modification to the WF/PC input power filter I agree that we can live with the ICD specification of 1.5 volts p-p. It is comforting that the measured value in the ST is 0.05 volts p-p!

(New Page created by IRN 57)

DEVIATION APPROVAL REQUEST

ST-ICD-03F
29 June 1984
IRN 60
15 March 1988

1. FOR: [XX] DEVIATION [ ] SUMMARY OF MINOR NONCO.

FROM CONTRACTOR:	3. CONTRACT NUMBER:	
JPL - WF/PC	NAS 7-100	WF/PC DAR-011

NOMENCLATURE:	6. NUMBER:	7. REVISION:	8. DATE.
WF/PC-I Power Allocation	ST-ICD-03 (ST/CM-08)	Rev. F	6-29-87

9. NONCONFORMANCE:	10. MRB ACTION NO.:	11. SERIAL NUMBER(S):	12. LOT NUMBER:	13. QUANTITY:
[XX] MINOR [ ] MAJOR	N/A	N/A	N/A	N/A

14. SUPPLIER OR SUBCONTRACTOR (GIVE NAME AND ADDRESS):

JPL, 4800 Oak Grove Drive, Pasadena, CA 91109

15. SPECIFIED REQUIREMENTS:

ST-ICD-03F, Paragraph 3.7, Electrical Power. The power consumed by the SI,...(see sheet 2).

16. DESCRIPTION OF DEPARTURE FROM REQUIREMENTS.

The WF/PC power usage exceeds the ICD power allocation due to previously approved desig changes (QEH fix, M1 heater operation fix). For details, see sheet 2.

17. REASON FOR REQUEST AND/OR CORRECTIVE ACTION TAKEN:

See sheet 2.

18. REMARKS:

ithout the power allocation increase, continuous cooling for both cameras cannot be aintained. Also, without the power allocation increase, the M1 Assembly may get contaminated, and hence prevent the WF/PC instrument from adequately flooding the CCDs with UV ligh

19. CONTRACTOR CERTIFICATION: THE CONTRACTOR HEREBY CERTIFIES THAT THE ABOVE DESCRIBED DEVIATION IS A DEPARTURE FROM THE CONTRACTUAL REQUIREMENTS IN THE QUANTITIES AND/OR CONDITIONS AS STATED ABOVE.

[ ] _____ COST ADJUSTMENT (EXPLAIN)

[XX] NO COST ADJUSTMENT

Project Manager — TITLE

SIGNATURE OF AUTHORIZED REPRESENTATIVE — 10/22/87 DATE

20. GOVERNMENT QUALITY ASSURANCE REPRESENTATIVE COMMENTS:

TITLE — SIGNATURE — DATE

21. MSFC REVIEW:

ORGANIZATION SYMBOL	REPRESENTATIVE	CONCURRENCE	NON-CONCURRENCE	DATE

22. CONTRACTING OFFICER'S REPRESENTATIVE OR OTHER DULY DELEGATED AUTHORITY:

[ ] DISAPPROVAL (RECOMMENDED)
[ ] APPROVAL (RECOMMENDED)(WITH) (WITHOUT) PRICE ADJUSTMENT. $ _____

SIGNATURE — DATE

23. CONTRACTING OFFICER:

[ ] APPROVED
[ ] DISAPPROVED
[ ] SUBJECT TO CONDITIONS STATED ON MSFC FORM _____

(New page created by IRN 60)

MSFC - Form 847 (Rev May 1969)

15. SPECIFIED REQUIREMENTS:

This DAR applies to the SI power allocations as stated in the Radial SI to OTA and SSM Interface Control Document for the HST; ST-ICD-03F (ST/CM-08), dated 6/29/87, paragraph 3.7.

> "3.7 Electrical Power. The power consumed by the SI, including any peak power excursions, does not exceed 150 watts (averaged over one orbit period). Hold mode power not to exceed 58 watts average per orbit including remote module. This 150 watt allocation includes any power required by the SI C&DH Remote Module (RM) mounted in the SI. A peak power of 250 watts for 2 minutes per orbit is permitted as long as the thermal constraints of 3.6.1 are maintained."

16. DESCRIPTION OF DEPARTURE FROM REQUIREMENTS:

The power consumed by the WF/PC instrument will exceed the 150 watts power allocation as shown in Tables 1 and 2 (sheet 3). Table 1 gives the maximum power usage for a nominal bus voltage of 28 Volts at the SI interface. Table 2 gives the maximum power usage for a bus voltage of 32 Volts. The "maximum usage" power shown in Tables 1 and 2 reflect worst-case WF/PC thermal environment and power regulation efficiencies.

Attached to this DAR is a copy of the WF/PC-1 Power Summary Report. This report gives a break down of the WF/PC-1 power usage for various operating modes and given various worst-case WF/PC thermal environments, bus voltages, and WF/PC power regulation efficiencies. Pages 7 and 8 in that report highlight the modes and conditions under which WF/PC will exceed the ICD power allocation.

17. REASON FOR REQUEST AND/OR CORRECTIVE ACTION TAKEN:

The power consumed by the WF/PC instrument has increased, for the following reasons: With the Quantum Efficiency Hesteresis (QEH) fix both sets of TECs (WFC & PC) are required to be powered on during normal operations to keep the CCDs cooled. If the CCDs are allowed to warm-up, QEH will reappear and UV-Flooding will be required. Secondly, there is a need to provide continuous heat to the UV pick-off mirror to boil-off contaminants from the M1/L1 optics during the first year of operations.

(New page created by IRN 60)

TABLE 1 - WF/PC POWER ALLOCATION/USAGE AT 28V

WF/PC MODE	ICD-03 ALLOCATION	FIRST YEAR ** MAX POWER USAGE	SECOND YEAR ** MAX POWER USAGE
OPERATE	150 W	197 W	175 W *
HOLD MODE	58 W	88 W	60 W
PEAK POWER	250 W	267 W	245 W *

* - For Pre UV-flood operations only. Normal operational power is 169 Watts (Maximum) and 239 Watts (Peak).

** - Only on an as HST power is available. When all other HST power requirements are satisfied.

TABLE 2 - WF/PC POWER ALLOCATION/USAGE AT 32V

WF/PC MODE	ICD-03 ALLOCATION	FIRST YEAR ** MAX POWER USAGE	SECOND YEAR ** MAX POWER USAGE
OPERATE	150 W	205 W	200 W *
HOLD MODE	58 W	97 W	60 W
PEAK POWER	250 W	275 W	270 W *

* - For Pre UV-flood operations only. Normal operational power is 169 Watts (Maximum) and 239 Watts (Peak).

** - Only on an as HST power is available. When all other HST power requirements are satisfied.

(New page created by IRN 60)

JET PROPULSION LABORATORY

TO: Distribution

FROM: D. Allestad/K. Leschly

SUBJECT: WF/PC-1 Power Summary Report

REFERENCE: IOM, "WF/PC Power/Mode Definition", From D. Swenson, To Distribution, 9 March 1984.

The purpose of this IOM is to document/revise the WF/PC-1 power modes, given the CCD icing fixes (per ECR 19146) and the independent operation of the M1 and heat pipe heaters (per ECR 19149).

The power consumption data is based on previously documented data (see referenced IOM) and recent tests with the WF/PC brass board. Final verification of total instrument power usage for each power mode will be done as part of TV-6.

Section 1 (and Table 1) of this IOM defines the nine WF/PC-1 power modes showing the ON/OFF state for each of the WF/PC power supplies/loads. Section 2 (and Tables 2A and 2B) summarizes the total WF/PC average/maximum power consumption for each power mode, as a function of orbital condition and bus voltage. Section 3 (and Tables 3A and 3B) provides the detail subassembly average/maximum/peak power dissipation for each of the main power supplies/loads, as a function of orbital condition and bus voltage. Finally, section 4 (and Table 4) contain the power consumption and power-on duration for each of the WF/PC mechanisms and lamps.

1. WF/PC-1 POWER MODES

The power ON/OFF states for each WF/PC power supply/load are shown in Table 1, as a function of power mode. The power modes are defined as follows.

MODE 1: HOLD (HLD)

The Hold mode has the RIUs and the LVPS powered on. During the first year in orbit, the M1 heaters will also be powered on (when HST power is available), to prevent contamination of the M1/L1 optics. This mode provides full command and telemetry capability.

(New page created by IRN 60)

MODE 2: CONDITIONAL OPERATE (COP)

The Conditional Operate mode has the RIUs, the LVPS, and the Mechanism Power Supply powered on. During the first year in orbit, the M1 heaters will also be powered on (when HST power is available), to prevent contamination of the M1/L1 optics. The conditional operate mode is used as a transition mode from safe or hold modes to either of the three operate modes (Full Operate, Operate-1, and Operate-2).

MODE 3: FULL OPERATE (FOP)

The Full Operate mode has the RIUs, the LVPS, the Mechanisms Power Supply, and both WFC and PC Thermal Electric Coolers (TECs) powered on. During the first year in orbit, the M1 heaters will also be powered on (when HST power is available), to prevent contamination of the M1/L1 optics. Following the OV-phase and initial UV-flood, WF/PC-1 is expected to remain in full operate mode during all normal HST operations.

MODE 4: OPERATE-1 (OP1)

The Operate-1 mode has the RIUs, the LVPS, the Mechanisms Power Supply, and WFC TECs powered on. During the first year in orbit, the M1 heaters will also be powered on (when HST power is available), to prevent contamination of the M1/L1 optics.

MODE 5: OPERATE-2 (OP2)

The Operate-2 mode has the RIUs, the LVPS, the Mechanisms Power Supply, and PC TECs powered on. During the first year in orbit, the M1 heaters will also be powered on (when HST power is available), to prevent contamination of the M1/L1 optics.

MODE 6: SAFE (SAF)

The Safe mode has the RIUs and the Replacement Heaters powered on. During the first year in orbit, the M1 heaters will also be powered on (when HST power is available), to prevent contamination of the M1/L1 optics. This mode is used to maintain WF/PC-1 in a thermally safe state during HST safing operations. This mode will provide limited command and telemetry via the RIUs.

(New page created by IRN 60)

MODE 7: OUTGASSING (OUT)

The instrument outgassing mode has the RIUs, the LVPS, the Heat Pipe heaters, and the M1 heaters powered on. This mode is used during early on-orbit operations to ensure adequate outgassing of the instrument following launch.

MODE 8: PRE UV-FLOOD (PUV)

The Pre UV-flood mode has the RIUs, the LVPS, the Mechanism Power Supply, the heat pipe heaters, and the M1 heaters powered on. This mode reflects the maximum power required during the UV-flooding operations.

MODE 9: PRE/POST-DEPLOYMENT (PPD)

The Pre/Post-deployment mode has the RIUs, the replacement heaters, the heat pipe heaters, and the M1 heaters powered on. This mode is used while in the Shuttle Payload Bay (pre-deployment) and following HST and SA deployment (post-deployment), to keep the radiator and M1/L1 optics free of contaminants.

2. INSTRUMENT POWER CONSUMPTION SUMMARY

Tables 2A and 2B gives the power summary for WF/PC-1. Both tables give the power summary for all nine modes at different orbital conditions (hot/cold), at different power levels (average/maximum), and at different bus voltages (24 V, 28 V, 32 V). Table 2A gives the power summary for the first year's operations (with M1 heaters on). Table 2B gives the power summary for operations during the second year and beyond (with M1 heaters off in 7 of the 9 modes).

NOTE

The two orbital conditions used in tables 2A and 2B, assumes a WF/PC hot orbit and a WF/PC cold orbit. Note that these conditions do not coincide with HST hot and cold orbits. In a WF/PC hot orbit, the TECs will use about 1.1 Amps. In a WF/PC cold orbit, the TECs will use about 0.6 Amps. Only the TEC subassemblies and their power supplies are effected by this change in amps.

(New page created by IRN 60)

The two power levels referred to in Tables 2A and 2B reflect average power and maximum power for steady state operations of durations longer than 2 minutes per orbit. Average power is the power consumption averaged over an orbit and with power supplies at average efficiency. Maximum power reflects an increase in power (i.e. 5% above average) due to thermal control and worst-case efficiency of the power supplies. The increase in power for thermal control affects bays 2 and 5 only. Variations in the power supply efficiency affect only the power supplies.

Peak power is the maximum power consumption with a duration less than 2 minutes per orbit, not including turn-on translent power levels. Peak power reflects maximum power plus any additional power required to operate a mechanism. Peak power is shown in Tables 3A and 3B only (see section 3 below).

The HST provides unregulated power from the spacecraft bus to the WF/PC power interface. The voltage from this unregulated bus can vary from 24 volts to 32 volts (ICD limits). Nomlnal voltage is 28 volts. Tables 2A and 2B show the instrument total power consumption for 24, 28, and 32 volts.

3. WF/PC-1 SUBASSEMBLY POWER DISSIPATION

Tables 3A and 3B show the power dissipation for each subassembly. Tables 3A and 3B show the average/maximum/peak power dissipation for WF/PC hot and cold orbits respectively, at three different bus voltages (24V/28V/32V).

In Tables 3A and 3B, there is a dummy power load associated with the Mech/Bay 5 load. This dummy load is a replacement load that is switched on when the WFC TECs are powered off. The load is a constant 5 watt resistive load. Therefore the subassembly power consumption tables will have two different subtotals for the mechanism depending on whether the WFC TECs are on or off.

(New page created by IRN 60)

4. MECHANISM POWER CONSUMPTION

Table 4 shows the power consumption for various mechanisms and lamps. These loads must be added to the maximum power to get the peak power consumption for durations shorter than 2 minutes per orbit (ICD definition of peak power). The pyramid mechanism which has the highest power consumption is used in Tables 3A and 3B for peak power.

(New page created by IRN 60)

TABLE 1: WF/PC-1 POWER MODES

LOADS	HLD (1)	COP (2)	FOP (3)	OP1 (4)	OP2 (5)	SAF (6)	OUT (7)	PUV (8)	PPD (9)
RIU	ON	ON	ON	ON	ON	ON	ON	ON	ON
LVPS	ON	ON	ON	ON	ON	OFF	ON	ON	OFF
MECHANISM	OFF	ON	ON	ON	ON	OFF	OFF	ON	OFF
TEC-PC	OFF	OFF	ON	OFF	ON	OFF	OFF	OFF	OFF
TEC-WF	OFF	OFF	ON	ON	OFF	OFF	OFF	OFF	OFF
REPLACEMENT HEATERS	OFF	OFF	OFF	OFF	OFF	ON	OFF	OFF	ON
HEAT PIPE HEATERS	OFF	OFF	OFF	OFF	OFF	OFF	ON	ON	ON
M1 HEATERS (1st yr)	ON	ON	ON	ON	ON	ON	ON	ON	ON
M1 HEATERS (after 1st yr)	OFF	OFF	OFF	OFF	OFF	OFF	ON	ON	NA

MODES

(1) HLD - HOLD
(2) COP - CONDITIONAL OPERATE
(3) FOP - FULL OPERATE
(4) OP1 - OPERATE (WF ONLY)
(5) OP2 - OPERATE (PC ONLY)
(6) SAF - SAFE
(7) OUT - OUTGASSING
(8) PUV - PRE UV-FLOOD
(9) PPD - PRE/POST-DEPLOYMENT

(New page created by IRN 60)

TABLE 2A: WF/PC-1 POWER SUMMARY (FIRST YEAR OPERATIONS)

WFPC ENVIRONMENT ~~ORBIT~~	POWER	S/C BUS (VOLTS)	HLD (1)	COP (2)	FOP (3)	OP1 (4)	OP2 (5)	SAF (6)	OUT (7)	PUV (8)	PPD (9)
HOT	AVERAGE (WATTS)	24	74.5	86.0	177.6	129.3	134.3	64.1	129.2	140.7	118.8
		28	81.9	93.4	185.0	136.7	141.7	86.1	156.3	167.8	160.5
		32	90.4	101.9	193.5	145.2	150.2	111.0	181.1	192.6	201.7
	MAXIMUM (WATTS)	24	80.8	92.6	189.0	138.3	143.3	64.1	135.5	147.3	118.2
		28	88.2	100.0	196.4	145.7	150.7	86.1	162.6	174.4	160.5
		32	96.7	108.5	204.9	154.2	159.2	111.0	187.4	199.2	201.7
COLD	AVERAGE (WATTS)	24	74.5	86.0	132.3	104.8	113.5	64.1	129.2	140.7	118.8
		28	81.9	93.4	139.7	112.2	120.9	86.1	156.3	167.8	160.5
		32	90.4	101.9	148.2	120.7	129.4	111.0	181.1	192.6	201.7
	MAXIMUM (WATTS)	24	80.8	92.6	140.4	112.6	120.4	64.1	135.5	147.3	118.2
		28	88.2	100.0	147.8	120.0	127.8	86.1	162.6	174.4	160.5
		32	96.7	108.5	156.3	128.5	136.3	111.0	187.4	199.2	201.7

MODES

(1) HLD - HOLD
(2) COP - CONDITIONAL OPERATE
(3) FOP - FULL OPERATE
(4) OP1 - OPERATE (WF ONLY)
(5) OP2 - OPERATE (PC ONLY)
(6) SAF - SAFE
(7) OUT - OUTGASSING
(8) PUV - PRE UV-FLOOD
(9) PPD - PRE/POST-DEPLOYMENT

Exceed ICD power allocation

Maximum power usage shown in Tables 1 and 2 (WF/PC DAR-011, sheet

(New page created by IRN 60)

ST-ICD-03F
29 June 1984
IRN 60
15 March 1988
WF/PC DAR-011
SHEET 10

TABLE 2B: WF/PC-1 POWER SUMMARY (SECOND YEAR OPERATIONS AND BEYOND)

WFPC ENVIRONMENT ~~ORBIT~~	POWER	S/C BUS (VOLTS)	HLD (1)	COP (2)	FOP (3)	OP1 (4)	OP2 (5)	SAF (6)	OUT (7)	PUV (8)	PPD (9)
HOT	AVERAGE (WATTS)	24	54.0	65.5	157.1	108.8	113.8	43.6	129.2	140.7	N/A
		28	54.0	65.5	157.1	108.8	113.8	58.2	156.3	167.8	N/A
		32	54.0	65.5	157.1	108.8	113.8	74.6	181.1	192.6	N/A
	MAXIMUM (WATTS)	24	60.3	72.1	168.5	117.8	122.8	43.6	135.5	147.3	N/A
		28	60.3	72.1	168.5	117.8	122.8	58.2	162.6	174.4	N/A
		32	60.3	72.1	168.5	117.8	122.8	74.6	187.4	199.2	N/A
COLD	AVERAGE (WATTS)	24	54.0	65.5	111.8	84.3	93.0	43.6	129.2	140.7	N/A
		28	54.0	65.5	111.8	84.3	93.0	58.2	156.3	167.8	N/A
		32	54.0	65.5	111.8	84.3	93.0	74.6	181.1	192.6	N/A
	MAXIMUM (WATTS)	24	60.3	72.1	119.9	92.1	99.9	43.6	135.5	147.3	N/A
		28	60.3	72.1	119.9	92.1	99.9	58.2	162.6	174.4	N/A
		32	60.3	72.1	119.9	92.1	99.9	74.6	187.4	199.2	N/A

Exceed ICD power allocation

Maximum power usage shown in Tables 1 and 2 (WF/PC DAR-011, sheet 3)

MODES

(1) HLD - HOLD
(2) COP - CONDITIONAL OPERATE
(3) FOP - FULL OPERATE
(4) OP1 - OPERATE (WF ONLY)
(5) OP2 - OPERATE (PC ONLY)
(6) SAF - SAFE
(7) OUT - OUTGASSING
(8) PUV - PRE UV-FLOOD
(9) PPD - PRE/POST-DEPLOYMENT

(New page created by IRN 60)

TABLE 3A: WF/PC-1 SUBASSEMBLY POWER DISSIPATION (HOT ~~OPUIT~~ WFPC ENVIRONMENT

	AVERAGE POWER (W)			MAXIMUM POWER (W)			PEAK POWER (W)		
BUS VOLTAGE	24 V	28 V	32 V	24 V	28 V	32 V	24 V	28 V	32 V
LOADS/LOCATIONS									
RIU/BAY 2	4.0	4.0	4.0	4.0	4.0	4.0	4.0	4.0	4.0
LVPS/BAY 1	5.0	5.0	5.0	5.3	5.3	5.3	5.3	5.3	5.3
LVPS/BAY 2	2.8	2.8	2.8	4.8	4.8	4.8	4.8	4.8	4.8
LVPS/BAY 3	5.6	5.6	5.6	5.9	5.9	5.9	5.9	5.9	5.9
LVPS/BAY 4	5.6	5.6	5.6	5.9	5.9	5.9	5.9	5.9	5.9
LVPS/BAY 5	31.0	31.0	31.0	34.4	34.4	34.4	34.4	34.4	34.4
SUBTOTAL	50.0	50.0	50.0	56.3	56.3	56.3	56.3	56.3	56.3
MECH/BAY 1	0.8	0.8	0.8	0.9	0.9	0.9	21.6	21.6	21.6
MECH(TEC-WF OFF)/BAY 5	10.5	10.5	10.5	10.9	10.9	10.9	34.8	34.8	34.8
MECH(TEC-WF ON)/BAY 5	5.7	5.7	5.7	5.9	5.9	5.9	29.8	29.8	29.8
MECH/MECHANISM	0.0	0.0	0.0	0.0	0.0	0.0	70.0	70.0	70.0
SUBTOTAL (TEC-WF OFF)	11.3	11.3	11.3	11.8	11.8	11.8	126.4	126.4	126.4
SUBTOTAL (TEC-WF ON)	6.5	6.5	6.5	6.8	6.8	6.8	121.4	121.4	121.4
TEC-WF/BAY 5	15.0	15.0	15.0	15.8	15.8	15.8	15.8	15.8	15.8
TEC-WF/WF HEAD	33.3	33.3	33.3	34.9	34.9	34.9	34.9	34.9	34.9
TEC-PC/BAY 5	15.0	15.0	15.0	15.8	15.8	15.8	15.8	15.8	15.8
TEC-PC/PC HEAD	33.3	33.3	33.3	34.9	34.9	34.9	34.9	34.9	34.9
SUBTOTAL	96.6	96.6	96.6	101.4	101.4	101.4	101.4	101.4	101.4
REPL-HTR/BAY 1	3.4	4.6	6.0	3.4	4.6	6.0	3.4	4.6	6.0
REPL-HTR/BAY 2	1.7	2.4	3.0	1.7	2.4	3.0	1.7	2.4	3.0
REPL-HTR/BAY 3	3.3	4.5	5.9	3.3	4.5	5.9	3.3	4.5	5.9
REPL-HTR/BAY 4	3.3	4.5	5.9	3.3	4.5	5.9	3.3	4.5	5.9
REPL-HTR/BAY 5	23.5	32.0	41.8	23.5	32.0	41.8	23.5	32.0	41.8
REPL-HTR/WF HEADS	2.2	3.1	4.0	2.2	3.1	4.0	2.2	3.1	4.0
REPL-HTR/PC HEADS	2.2	3.1	4.0	2.2	3.1	4.0	2.2	3.1	4.0
SUBTOTAL	39.6	54.2	70.6	39.6	54.2	70.6	39.6	54.2	70.6
HEAT PIPES HTR	54.7	74.4	97.2	54.7	74.4	97.2	54.7	74.4	97.2
MI MIRROR HTR	20.5	27.9	36.4	20.5	27.9	36.4	20.5	27.9	36.4
SUBTOTAL	75.2	102.3	133.6	75.2	102.3	133.6	75.2	102.3	133.6

(New page created by IRN 60)

TABLE 3B: WF/PC-1 SUBASSEMBLY POWER DISSIPATION (COLD ~~ORBIT~~ WFPC ENVIRONMENT)

	AVERAGE POWER (W)			MAXIMUM POWER (W)			PEAK POWER (W)		
BUS VOLTAGE	24 V	28 V	32 V	24 V	28 V	32 V	24 V	28 V	32 V
LOADS/LOCATIONS									
RIU/BAY 2	4.0	4.0	4.0	4.0	4.0	4.0	4.0	4.0	4.0
LVPS/BAY 1	5.0	5.0	5.0	5.3	5.3	5.3	5.3	5.3	5.3
LVPS/BAY 2	2.8	2.8	2.8	4.8	4.8	4.8	4.8	4.8	4.8
LVPS/BAY 3	5.6	5.6	5.6	5.9	5.9	5.9	5.9	5.9	5.9
LVPS/BAY 4	5.6	5.6	5.6	5.9	5.9	5.9	5.9	5.9	5.9
LVPS/BAY 5	31.0	31.0	31.0	34.4	34.4	34.4	34.4	34.4	34.4
SUBTOTAL	50.0	50.0	50.0	56.3	56.3	56.3	56.3	56.3	56.3
MECH/BAY 1	0.8	0.8	0.8	0.9	0.9	0.9	21.6	21.6	21.6
MECH(TEC-WF OFF)/BAY 5	10.7	10.7	10.7	10.9	10.9	10.9	34.8	34.8	34.8
MECH(TEC-WF ON)/BAY 5	5.7	5.7	5.7	5.9	5.9	5.9	29.8	29.8	29.8
MECH/MECHANISM	0.0	0.0	0.0	0.0	0.0	0.0	70.0	70.0	70.0
SUBTOTAL (TEC-WF OFF)	11.5	11.5	11.5	11.8	11.8	11.8	126.4	126.4	126.4
SUBTOTAL (TEC-WF ON)	6.5	6.5	6.5	6.8	6.8	6.8	121.4	121.4	121.4
TEC-WF/BAY 5	17.3	17.3	17.3	18.2	18.2	18.2	18.2	18.2	18.2
TEC-WF/WF HEAD	6.5	6.5	6.5	6.8	6.8	6.8	6.8	6.8	6.8
TEC-PC/BAY 5	21.0	21.0	21.0	22.0	22.0	22.0	22.0	22.0	22.0
TEC-PC/PC HEAD	6.5	6.5	6.5	6.8	6.8	6.8	6.8	6.8	6.8
SUBTOTAL	51.3	51.3	51.3	53.8	53.8	53.8	53.8	53.8	53.8
REPL-HTR/BAY 1	3.4	4.6	6.0	3.4	4.6	6.0	3.4	4.6	6.0
REPL-HTR/BAY 2	1.7	2.4	3.0	1.7	2.4	3.0	1.7	2.4	3.0
REPL-HTR/BAY 3	3.3	4.5	5.9	3.3	4.5	5.9	3.3	4.5	5.9
REPL-HTR/BAY 4	3.3	4.5	5.9	3.3	4.5	5.9	3.3	4.5	5.9
REPL-HTR/BAY 5	23.5	32.0	41.8	23.5	32.0	41.8	23.5	32.0	41.8
REPL-HTR/WF HEADS	2.2	3.1	4.0	2.2	3.1	4.0	2.2	3.1	4.0
REPL-HTR/PC HEADS	2.2	3.1	4.0	2.2	3.1	4.0	2.2	3.1	4.0
SUBTOTAL	39.6	54.2	70.6	39.6	54.2	70.6	39.6	54.2	70.6
HEAT PIPES HTR	54.7	74.4	97.2	54.7	74.4	97.2	54.7	74.4	97.2
M1 MIRROR HTR	20.5	27.9	36.4	20.5	27.9	36.4	20.5	27.9	36.4
SUBTOTAL	75.2	102.3	133.6	75.2	102.3	133.6	75.2	102.3	133.6

(New page created by IRN 60)

TABLE 4: MECHANISM/LAMP POWER

MECHANISM/LAMPS	POWER (W)	DURATION (TYPICAL)
o Shutter	31.4	110 msec/blade
o Pyramid Rotation	70.0	6 sec/command
o Pyramid Focus	70.0	80 msec/command
o UV Flood Mirror	70.0	12 sec/command
o SOFA	25.0	29 sec/command
o K-Spot Lamps	6.4	70 sec/command(max)
o Cal Lamps	12.8	70 sec/command(max)

(New page created by IRN 60)

DEVIATION APPROVAL REQUEST

1. FOR: [X] DEVIATION [ ] SUMMARY OF MINOR NONCONFORMANCES

2. FROM CONTRACTOR: JPL - WFPC
3. CONTRACT NUMBER: NAS 7-100
4. REQUEST NUMBER: WFPC DAR-012
5. NOMENCLATURE: WFPC-I Power Allocation
6. NUMBER: ST-ICD-03
7. REVISION: REV F
8. DATE: 6/29/84
9. NONCONFORMANCE: [X] MINOR [ ] MAJOR
10. MRB ACTION NO.: N/A
11. SERIAL NUMBER(S): N/A
12. LOT NUMBER: N/A
13. QUANTITY: N/A
14. SUPPLIER OR SUBCONTRACTOR (GIVE NAME AND ADDRESS): JPL, 4800 Oak Grove Drive, Pasadena, CA 91109
15. SPECIFIED REQUIREMENTS: ST-ICD-03F, Paragraph 3.7, Electrical Power. The power consumed by the S1,... (see sheet 2).
16. DESCRIPTION OF DEPARTURE FROM REQUIREMENTS: The WFPC power usage exceeds the ICD power allocation due to previously approved design changes (QEH fix, M1 heater operation, and CCD boil-off heater addition). For details see sheet 2.
17. REASON FOR REQUEST AND/OR CORRECTIVE ACTION TAKEN: The increased power usage is required to prevent QEH and ensure contamination control of M1 and CCD optics. For details see sheet 2.
18. REMARKS: This DAR replaces the previously submitted/approved DAR-011 entirely.
19. CONTRACTOR CERTIFICATION: THE CONTRACTOR HEREBY CERTIFIES THAT THE ABOVE DESCRIBED DEVIATION IS A DEPARTURE FROM THE CONTRACTUAL REQUIREMENTS IN THE QUANTITIES AND/OR CONDITIONS AS STATED ABOVE.
[ ] COST ADJUSTMENT (EXPLAIN)
[X] NO COST ADJUSTMENT
WFPC Project Manager — SIGNATURE OF AUTHORIZED REPRESENTATIVE — DATE 12/3/88
ORIGINAL LOST DR MSFC THIS IS A TRUE COPY [illegible] JPL
20. GOVERNMENT QUALITY ASSURANCE REPRESENTATIVE COMMENTS:
SIGN — SIGNATURE — DATE
21. MSFC REVIEW:

ORGANIZATION SYMBOL	REPRESENTATIVE	CONCURRENCE	NONCONCURRENCE	DATE

22. CONTRACTING OFFICER'S REPRESENTATIVE OR OTHER DULY DELEGATED AUTHORITY:
[ ] DISAPPROVAL (RECOMMENDED)
[ ] APPROVAL (RECOMMENDED) (WITH) (WITHOUT) PRICE ADJUSTMENT. $ ____
SIGNATURE — DATE
23. CONTRACTING OFFICER:
[ ] APPROVED
[ ] DISAPPROVED
[ ] SUBJECT TO CONDITIONS STATED ON MSFC FORM ____
SIGNATURE — DATE

MSFC - Form 47 (Rev May 1988)

ORIGINAL
(New page created by IRN 62)

15. SPECIFIED REQUIREMENTS:

This DAR applies to the SI power allocations as stated in the Radial SI to OTA and SSM Interface Control Document for the HST; ST-ICD-03F (ST/CM-08), dated 6/29/84, paragraph 3.7.

> "3.7 Electrical Power. The power consumed by the SI, including any peak power excursions, does not exceed 150 watts (averaged over one orbit period). Hold mode power not to exceed 58 watts average per orbit including remote module. This 150 watt allocation includes any power required by the SI C&DH Remote Module (RM) mounted in the SI. A peak power of 250 watts for 2 minutes per orbit is permitted as long as the thermal constraints of 3.6.1 are maintained."

16. DESCRIPTION OF DEPARTURE FROM REQUIREMENTS:

The power consumed by the WFPC instrument will exceed the 150 watts power allocation as shown in Tables 1 and 2 (sheet 3). Table 1 gives the maximum power usage for a nominal bus voltage of 28 Volts at the SI interface. Table 2 gives the maximum power usage for a bus voltage of 32 Volts. The "maximum usage" power shown in Tables 1 and 2 reflect worst-case WFPC radiator thermal environment and power regulation efficiencies.

Attached to this DAR is a copy of the WFPC-I Power Summary Report. This report gives a break down of the WFPC-I power usage for various operating modes and given various worst-case WFPC radiator thermal environments, bus voltages, and WFPC power regulation efficiencies. The modes and conditions under which WFPC will exceed the ICD power allocation are highlighted in Tables 2A and 2B in the WFPC-I Power Summary Report.

17. REASON FOR REQUEST AND/OR CORRECTIVE ACTION TAKEN:

The power consumed by the WFPC instrument has increased, for the following reasons:

A) With the Quantum Efficiency Hysteresis (QEH) fix both sets of TECs (WFC & PC) are required to be powered on during normal operations to keep the CCDs cooled. If the CCDs are allowed to warm-up, QEH will reappear and UV-flooding and instrument recalibration will be required.

B) Continuous heat to the UV pick-off mirror is required to boil-off contaminants from the M1/L1 optics during the first year of operations, to prevent potential polymerization when exposed to the sun.

(New page created by IRN 62)

C) Heaters have been added to the Heat-pipe heater set to allow CCD boil-off (high-temperature decontamination) at selected times and for a limited duration (about 8 hours each time) during the HST mission. Also, during pre- and post-deployment operations the heat-pipe heaters are planned to be powered on to prevent contamination from shuttle environment.

TABLE 1 - WFPC POWER ALLOCATION/USAGE AT 28V

WFPC MODE	ICD-03 ALLOCATION	FIRST YEAR MAX POWER USAGE	SECOND YEAR MAX POWER USAGE
Operate	150 W	197 W	170 W
Hold Mode	58 W	88 W	60 W
Special Modes:*			
-CCD Boil-off	N/A	228 W	228 W
-Pre/Post Deploy	N/A	227 W	N/A
Peak Power	250 W	267 W	240 W

* Limited duration only (pre-planned)

TABLE 2 - WFPC POWER ALLOCATION/USAGE AT 32V

WFPC MODE	ICD-03 ALLOCATION	FIRST YEAR MAX POWER USAGE	SECOND YEAR MAX POWER USAGE
Operate	N/A	205 W	170 W
Hold Mode	N/A	97 W	60 W
Special Modes:*			
-CCD Boil-off	N/A	280 W	280 W
-Pre/Post Deploy	N/A	296 W	N/A
Peak Power	N/A	275 W	240 W

* Limited duration only (pre-planned)

(New page created by IRN 62)

Jet Propulsion Laboratory
California Institute of Technology
4800 Oak Grove Drive
Pasadena, California 91109
(818) 354-4321

JPL

WFPC DAR-012
Sheet 3A

JET PROPULSION LABORATORY

INTEROFFICE MEMO

WFPC-DA-88-027A

January 5, 1989

TO: DAR 012 Distribution

FROM: K.D. Fellerman

SUBJECT: Clarification to IOM WFPC-DA-88-027

The referenced IOM includes all previous power changes incorporated into the WF/PC I immediately prior to TV-6 and the changes incorporated after TV-6.

JET PROPULSION LABORATORY

INTEROFFICE MEMO

WFPC-DA-88-027

13 October 1988
WFPC DFM# 1194

TO: Distribution

FROM: D. Allestad / K. Leschly

SUBJECT: WFPC-I Power Summary Report

REFERENCE: IOM, "WFPC-I Power Summary Report", From D. Allestad/K. Leschly, To Distribution, 22 September 1987, DFM# 1093.

IOM, "WFPC-I Power Consumption Report From TVT-6", From T. Bickler, To Distribution, 3 August 1988, DFM # 1189.

This IOM documents the revised power consumption for WFPC-I, given the data obtained from TVT-6 (per DFM #1189), additional heat pipe heaters (per ECR 19152) and separation of control of the Bay 5 Replacement Heaters from the remaining Replacement Heaters (per ECR 19153).

1. WFPC-I POWER MODES

This section defines eight WFPC-I power modes. The eight WFPC-I power modes, presented in Table 1, list standard combinations of power loads which will be used on orbit. The power loads which can be commanded ON/OFF independantly, are as follows: RIU, Low Voltage Power Supply (LVPS), Mechanism Power Supply, WF TEC power supply, PC TEC power supply, Replacement Heaters, Bay 5 Heaters, Heat Pipe Heaters and M1 Heaters. Figure 1 shows the functional block diagram for WFPC-I, including each of these power loads.

The following is a brief description for each power mode.

HOLD (Mode #1)

This mode provides full command and telemetry capability. Both discrete and serial commands can be used in this mode with the exception of those serial commands that command the mechanisms and TECs since no power is supplied to these two items. The Hold mode has the RIUs and the LVPS powered on. During the first year in orbit, the M1 Heaters will also be powered on (when HST power is available), to prevent contamination of the M1/L1 optics.

(New page created by IRN 62)

CONDITIONAL OPERATE (Mode #2)

The conditional operate mode is used as a transition mode from HOLD modes to either of the three operate modes (Full Operate, WFC Operate, and PC Operate). Both discrete and serial commands can be used in this mode with the exception of those serial commands that require use of TECs since no power is supplied to the TECs. The Conditional Operate mode has the RIUs, the LVPS, and the Mechanism Power Supply powered on.

During the first year in orbit, the M1 Heaters will also be powered on (when HST power is available), to prevent contamination of the M1/L1 optics.

FULL OPERATE (Mode #3)

Following the OV-phase and initial UV-flood, WFPC-I is expected to remain in full operate mode during all normal HST operations. Once in the Full Operate mode, the instrument can take pictures with either the WFC or the PC upon command. Although both camera systems are operating, only one camera (WFC or PC) can take pictures at one time. The Full Operate mode has the RIUs, the LVPS, the Mechanisms Power Supply, and both WFC and PC Thermal Electric Coolers (TECs) powered on. During the first year in orbit, the M1 Heaters will also be powered on (when HST power is available), to prevent contamination of the M1/L1 optics.

WFC OPERATE (Mode #4)

In the event of a problem such as a failure in the HST power subsystem that limits the amount of power available to WFPC or an anomaly with the PC detectors, WFPC can be configured to operate with only the WFC detectors. The Operate-WFC mode has the RIUs, the LVPS, the Mechanisms Power Supply, and WFC TECs powered on. During the first year in orbit, the M1 Heaters will also be powered on (when HST power is available), to prevent contamination of the M1/L1 optics.

PC OPERATE (Mode #5)

In the event of a problem such as a failure in the HST power subsystem that limits the amount of power available to WFPC or an anomaly with the WFC detectors, WFPC can be configured to operate with only the PC detectors. The Operate-PC mode has the RIUs, the LVPS, the Mechanisms Power Supply, and PC TECs powered on. During the first year in orbit, the M1 Heaters will also be powered on (when HST power is available), to prevent contamination of the M1/L1 optics.

(New page created by IRN 62)

SAFE (Mode #6)

This mode is used to maintain WFPC-I in a thermally safe state during HST safing operations. This mode will provide limited commands (discrete commands only) and RIU direct telemetry since the LVPS is not powered on. The Safe mode has the RIUs, the Replacement Heaters (Bay 1 - 4 and Camera Head electronics), and Bay 5 heaters (since LVPS is OFF) powered on. The Bay 5 heaters will be powered on whenever LVPS is off, and HST power to WFPC is on. During the first year in orbit, the M1 Heaters will also be powered on (when HST power is available), to prevent contamination of the M1/L1 optics.

CCD BOIL-OFF (Mode #7)

This mode is used during on-orbit operations to ensure adequate removal of contaminants from the CCDs. The CCD Boil-Off mode has the RIUs, the LVPS, the Heat Pipe Heaters, and the M1 Heaters powered on.

PRE/POST-DEPLOYMENT (Mode #8)

This mode is used while in the Shuttle Payload Bay (pre-deployment) and following HST and on deployment (post-deployment), to keep the radiator and M1/L1 optics free of contaminants. The Pre/Post-Deployment mode has the RIUs, the Replacement Heaters, the Bay 5 heaters (LVPS Off), the Heat Pipe Heaters, and the M1 Heaters powered on.

2. INSTRUMENT POWER CONSUMPTION SUMMARY

This section summarizes the total WFPC-I power consumption. Tables 2A and 2B in this section gives the total power summary for WFPC-I.

The instrument receives power from the Space Telescope from two interface (I/F) sources. One I/F source powers the RIUs and the second I/F source powers the rest of the instrument. The RIUs consume about 4 watts. The rest of the instrument consumes power based on the selected combinations of power supplies and resistive loads which are powered on. Total power consumed by the instrument is then the power consumed by the RIUs plus the power consumed by the rest of the instrument.

Both tables give the power summary for all eight modes at different WFPC radiator environments/fluxes (hot/cold), at different power levels (average/maximum), and at different bus voltages (24 V, 28 V, 32 V). Table 2A gives the power summary for the first year's operations (with M1 heaters on). Table 2B gives the power summary for operations during the second year and beyond (with M1 heaters off in 6 of the 8 modes).

(New page created by IRN 62)

The two WFPC Radiator Environments/Fluxes used in tables 2A and 2B, assumes realistic hot radiator fluxes and realistic cold radiator fluxes. Note that these conditions do not coincide with HST realistic hot and cold orbits. The TECs will use 1.1 Amps for a hot radiator flux environment. The TEC current will stay at 1.1 Amps through-out a temperature range for any given hot radiator flux. The TECs can get as low as 0.6 Amps for cold radiator fluxes environments. The TEC current will vary through-out a temperature range for a given cold radiator flux. The TEC current will decrease as the radiator fluxes gets colder. Only the TEC subassemblies and their power supplies are effected by this change in amps. (Figure 2 shows WFPC power as a function of Hot Junction temperature.)

The two power levels referred to in Tables 2A and 2B reflect average power and maximum power for steady state operations of durations longer than 2 minutes per orbit. Average power is the power consumption averaged over an orbit and with power supplies at average efficiency. Maximum power reflects an increase in power (i.e. 5% above average) given worst-case efficiency of the power supplies. Variations in the power supply efficiency affect only the power supplies.

Peak power is the maximum power consumption with a duration less than 2 minutes per orbit, not including turn-on transient power levels. Peak power reflects maximum power plus any additional power required to operate a mechanism or lamp. Peak power is shown in Tables 3A and 3B only (see section 3 below).

The HST power bus provides unregulated power to the WFPC power interface. The voltage from this unregulated bus can vary from 24 volts to 32 volts (ICD limits). Nominal voltage is 28 volts. Tables 2A and 2B show the instrument total power consumption for 24, 28, and 32 volts.

TVT-6 power data (Reference 2) is included at the bottom of both tables 2A and 2B. This power data is assumed to be average power. This data is included to show how the actual WFPC-I power data compares to the predicted power consumption. TVT-6 power data should be close to predicted average power, but less than maximum predicted power. By inspection, there is a very good correlation between TVT-6 power data and predicted power data, given the uncertainty in the recorded voltage.

There are some power modes in the TVT-6 cold radiator flux power data which are inconsistent with predicted cold radiator flux power data. In TVT-6, the hot junctions were not allowed to get as cold as planned in Tables 2A and 2B, therefore, a difference between TVT-6 power data and Predicted power was observed.

(New page created by IRN 62)

3. WFPC-I SUBASSEMBLY POWER DISSIPATION

This section provides the detail subassembly average/-maximum/peak power dissipation for each of the main power supplies and resistive loads, as a function of radiator fluxes and bus voltage. Tables 3A and 3B show the average/maximum/peak power dissipation for WFPC hot and cold orbits respectively, at three different bus voltages (24 V/28 V/32 V) for each subassembly.

In Tables 3A and 3B, there is a replacement power load associated with the Mech/Bay 5 load. This replacement load is switched on when the WFC TECs are powered off. The replacement load is a resistive load and subject to change with voltage change. Therefore the subassembly power consumption tables will have different subtotals for the mechanism depending on whether the WFC TECs are on or off and the bus voltage.

4. MECHANISM POWER CONSUMPTION

This section contains the power consumption and power-on duration for each of the WFPC mechanisms and lamps, see Table 4. These loads must be added to the maximum power to get the peak power consumption for durations shorter than 2 minutes per orbit (ICD definition of peak power). The pyramid mechanism which has one of the highest power consumption is used in Tables 3A and 3B for peak power.

5. HEATERS

This section contains the power consumption for each of the WFPC heater loads. Table 5 lists the resistor and power for each resistive heater load used on WFPC-I.

There is no commandable OFF power mode for WFPC-I. From ECR 19153, the Bay 5 replacement heaters were connected into the LVPS ON/OFF switch. Therefore, if the LVPS is OFF then the Bay 5 Heaters are ON, and if the LVPS is ON then the Bay 5 Heaters are OFF. The HST will need to turn off power to the WFPC power I/F in order to turn the instrument off completely.

(New page created by IRN 62)

TABLE 1: WF/PC-1 POWER MODES

LOADS	HOLD (1)	COND OPERATE (2)	FULL OPERATE (3)	WFC OPERATE (4)	PC OPERATE (5)	SAFE (6)	ECD BOIL-OFF (7)	PRE/POST DEPLOYMENT (8)
RIU	ON	ON	ON	ON	ON	ON	ON	ON
LVPS	ON	ON	ON	ON	ON	-	ON	-
MECHANISM	-	ON	ON	ON	ON	-	-	-
TEC-PC	-	-	ON	-	ON	-	-	-
TEC-WF	-	-	ON	ON	-	-	-	-
REPLACEMENT HEATERS	-	-	-	-	-	ON	-	ON
BAY 5 HEATERS	-	-	-	-	-	ON	-	ON
HEAT PIPE HEATERS	-	-	-	-	-	-	ON	ON
M1 HEATERS (1ST YEAR)	ON	ON	ON	ON	ON	ON	ON	ON
M1 HEATERS (AFTER 1ST YEAR)	-	-	-	-	-	-	ON	N/A

(New page created by IRN 62)

TABLE 2A: WF/PC-1 POWER SUMMARY IN WATTS (FIRST YEAR OPERATIONS)

RADIATOR FLUXES	POWER	POWER BUS	HOLD (1)	COND OPERATE (2)	FULL OPERATE (3)	WFC OPERATE (4)	PC OPERATE (5)	SAFE (6)	CCD BOIL-OFF (7)	PRE/POST DEPLOYMENT (8)
HOT	AVERAGE	24 V	74.4	81.7	179.5	130.3	130.9	64.2	177.9	167.7
		28 V	81.8	93.1	186.9	137.7	142.3	85.9	222.8	226.9
		32 V	90.4	105.7	195.5	146.3	154.9	111.0	274.5	295.1
	MAXIMUM	24 V	78.9	86.6	189.0	137.5	138.1	64.2	182.4	167.7
		28 V	86.3	98.2	194.4	144.9	149.7	85.9	227.3	226.9
		32 V	94.9	111.0	205.0	153.5	162.5	111.0	279.0	295.1
COLD	AVERAGE	24 V	74.4	81.7	132.6	112.1	102.2	64.2	177.9	167.7
		28 V	81.8	93.1	140.0	119.5	113.6	85.9	222.8	226.9
		32 V	90.4	105.7	148.6	128.1	126.2	111.0	274.5	295.1
	MAXIMUM	24 V	78.9	86.6	140.1	118.5	108.2	64.2	182.4	167.7
		28 V	86.3	98.2	147.5	125.9	119.8	85.9	227.3	226.9
		32 V	94.9	111.0	156.1	134.5	132.6	111.0	279.0	295.1

TVT-6 TEST POWER DATA SUMMARY IN WATTS (FIRST YEAR OPERATIONS)

HOT	AVERAGE	24 V	73.1	----	172.3	123.4	128.2	64.0	----	168.6*
		28 V	80.8	92.1	187.0	136.7	144.8	87.3	221.9*	228.4*
		32 V	91.2	106.5	199.1	145.4	----	112.2	275.6*	296.8*
COLD	AVERAGE	24 V	73.1	----	----	----	----	64.0	----	168.6*
		28 V	80.8	92.1	----	113.7	----	87.3	221.9*	228.4*
		32 V	91.2	106.5	----	----	138.6	112.2	275.6*	296.8*

* ADJUSTED TO ACCOUNT FOR ADDED HP HEATERS, PER ECR 1915T 2

TABLE 26: WF/PC-1 POWER SUMMARY IN WATTS (SECOND YEAR OPERATIONS AND BEYOND)

RADIATOR FUNCTIONS	POWER	POWER BUS	HOLD (1)	COND OPERATE (2)	FULL OPERATE (3)	WFC OPERATE (4)	PC OPERATE (5)	SAFE (6)	CCD BOIL-OFF (7)	PRE/POST DEPLOYMENT (8)
HOT	AVERAGE	24 V	54.0	61.3	159.1	109.9	110.5	43.8	177.9	N/A
		28 V	54.0	65.3	159.1	109.9	114.5	50.1	222.8	N/A
		32 V	54.0	69.3	159.1	109.9	118.5	74.6	274.5	N/A
	MAXIMUM	24 V	58.5	66.2	168.6	117.1	117.7	43.8	182.4	N/A
		28 V	58.5	70.4	168.6	117.1	121.9	50.1	227.3	N/A
		32 V	58.5	74.6	168.6	117.1	126.1	74.6	279.0	N/A
COLD	AVERAGE	24 V	54.0	61.3	112.2	91.7	81.8	43.8	177.9	N/A
		28 V	54.0	65.3	112.2	91.7	85.8	50.1	222.8	N/A
		32 V	54.0	69.3	112.2	91.7	89.8	74.6	274.5	N/A
	MAXIMUM	24 V	58.5	66.2	119.7	98.1	87.8	43.8	182.4	N/A
		28 V	58.5	70.4	119.7	98.1	92.0	50.1	227.3	N/A
		32 V	58.5	74.6	119.7	98.1	96.2	74.6	279.0	N/A

TVT-6 TEST POWER DATA SUMMARY IN WATTS (SECOND YEAR OPERATIONS AND BEYOND)

HOT	AVERAGE	24 V	52.7	----	151.8	102.9	107.7	48.5	----	N/A
		28 V	53.0	64.3	159.2	108.9	117.0	59.5	221.9*	N/A
		32 V	54.8	70.1	162.7	109.4	----	76.8	275.6*	N/A
COLD	AVERAGE	24 V	52.7	----	----	----	----	48.5	----	N/A
		28 V	53.0	64.3	----	----	----	59.5	221.9*	N/A
		32 V	54.8	70.1	----	----	102.2	76.8	275.6*	N/A

* ADJUSTED TO ACCOUNT FOR ADDED HP HEATERS, PER ECR 1915

(New page created by IRN 62)

TABLE 3A: WF/PC-1 SUBASSEMBLY POWER DISSIPATION (HOT ORBIT)

	AVERAGE POWER (W)			MAXIMUM POWER (W)			PEAK POWER (W)		
BUS VOLTAGE	24 V	28 V	32 V	24 V	28 V	32 V	24 V	28 V	32 V
LOADS/LOCATIONS									
RIU/BAY 2	4.0	4.0	4.0	4.0	4.0	4.0	4.0	4.0	4.0
LVPS/BAY 1	5.0	5.0	5.0	5.0	5.0	5.0	5.0	5.0	5.0
LVPS/BAY 2	2.8	2.8	2.8	4.8	4.8	4.8	4.8	4.8	4.8
LVPS/BAY 3	3.2	3.2	3.2	3.2	3.2	3.2	3.2	3.2	3.2
LVPS/BAY 4	3.2	3.2	3.2	3.2	3.2	3.2	3.2	3.2	3.2
LVPS/BAY 5	31.0	31.0	31.0	33.5	33.5	33.5	33.5	33.5	33.5
LVPS/WF CH	2.4	2.4	2.4	2.4	2.4	2.4	2.4	2.4	2.4
LVPS/PC CH	2.4	2.4	2.4	2.4	2.4	2.4	2.4	2.4	2.4
SUBTOTAL	50.0	50.0	50.0	54.5	54.5	54.5	54.5	54.5	54.5
MECH/BAY 1	0.8	0.8	0.8	0.8	0.8	0.8	21.6	21.6	21.6
MECH(TEC-WF OFF)/BAY 5	6.5	10.5	14.5	6.8	11.0	15.2	34.8	34.8	34.8
MECH(TEC-WF ON)/BAY 5	5.7	5.7	5.7	6.0	6.0	6.0	29.8	29.8	29.8
MECH/MECHANISM	0.0	0.0	0.0	0.0	0.0	0.0	70.0	70.0	70.0
SUBTOTAL (TEC-WF OFF)	7.3	11.3	15.3	7.7	11.9	16.1	126.4	126.4	126.4
SUBTOTAL (TEC-WF ON)	6.5	6.5	6.5	6.8	6.8	6.8	121.4	121.4	121.4
TEC-WF/BAY 5	19.5	19.5	19.5	20.4	20.4	20.4	20.4	20.4	20.4
TEC-WF/WF HEAD	29.9	29.9	29.9	31.4	31.4	31.4	31.4	31.4	31.4
SUBTOTAL	49.3	49.3	49.3	51.8	51.8	51.8	51.8	51.8	51.8
TEC-PC/BAY 5	20.1	20.1	20.1	21.1	21.1	21.1	21.1	21.1	21.1
TEC-PC/PC HEAD	29.0	29.0	29.0	30.4	30.4	30.4	30.4	30.4	30.4
SUBTOTAL	49.1	49.1	49.1	51.5	51.5	51.5	51.5	51.5	51.5
REPL-HTR/BAY 1	3.4	4.6	6.0	3.4	4.6	6.0	3.4	4.6	6.0
REPL-HTR/BAY 2	1.7	2.4	3.1	1.7	2.4	3.1	1.7	2.4	3.1
REPL-HTR/BAY 3	3.3	4.5	5.9	3.3	4.5	5.9	3.3	4.5	5.9
REPL-HTR/BAY 4	3.3	4.5	5.9	3.3	4.5	5.9	3.3	4.5	5.9
REPL-HTR/WF HEADS	2.3	3.1	4.0	2.3	3.1	4.0	2.3	3.1	4.0
REPL-HTR/PC HEADS	2.3	3.1	4.0	2.3	3.1	4.0	2.3	3.1	4.0
SUBTOTAL	16.3	22.2	28.9	16.3	22.2	28.9	16.3	22.2	28.9
REPL-HTR/BAY 5	23.5	31.9	41.7	23.5	31.9	41.7	23.5	31.9	41.7
HEAT PIPES HTR	103.3	140.6	183.7	103.3	140.6	183.7	103.3	140.6	183.7
M1 MIRROR HTR	20.4	27.8	36.4	20.4	27.8	36.4	20.4	27.8	36.4

(New page created by IRN 62)

TABLE 38: WF/PC-1 SUBASSEMBLY POWER DISSIPATION (COLD ORBIT)

	AVERAGE POWER (W)			MAXIMUM POWER (W)			PEAK POWER (W)		
BUS VOLTAGE	24 V	28 V	32 V	24 V	28 V	32 V	24 V	28 V	32 V
LOADS/LOCATIONS									
RIU/BAY 2	4.0	4.0	4.0	4.0	4.0	4.0	4.0	4.0	4.0
LVPS/BAY 1	5.0	5.0	5.0	5.0	5.0	5.0	5.0	5.0	5.0
LVPS/BAY 2	2.8	2.8	2.8	4.8	4.8	4.8	4.8	4.8	4.8
LVPS/BAY 3	3.2	3.2	3.2	3.2	3.2	3.2	3.2	3.2	3.2
LVPS/BAY 4	3.2	3.2	3.2	3.2	3.2	3.2	3.2	3.2	3.2
LVPS/BAY 5	31.0	31.0	31.0	33.5	33.5	33.5	33.5	33.5	33.5
LVPS/WF CH	2.4	2.4	2.4	2.4	2.4	2.4	2.4	2.4	2.4
LVPS/PC CH	2.4	2.4	2.4	2.4	2.4	2.4	2.4	2.4	2.4
SUBTOTAL	50.0	50.0	50.0	54.5	54.5	54.5	54.5	54.5	54.5
MECH/BAY 1	0.8	0.8	0.8	0.8	0.8	0.8	21.6	21.6	21.6
MECH(TEC-WF OFF)/BAY 5	6.5	10.5	14.5	6.8	11.0	15.2	34.8	34.8	34.8
MECH(TEC-WF ON)/BAY 5	5.7	5.7	5.7	6.0	6.0	6.0	29.8	29.8	29.8
MECH/MECHANISM	0.0	0.0	0.0	0.0	0.0	0.0	70.0	70.0	70.0
SUBTOTAL (TEC-WF OFF)	7.3	11.3	15.3	7.7	11.9	16.1	126.4	126.4	126.4
SUBTOTAL (TEC-WF ON)	6.5	6.5	6.5	6.8	6.8	6.8	121.4	121.4	121.4
TEC-WF/BAY 5	21.9	21.9	21.9	23.0	23.0	23.0	23.0	23.0	23.0
TEC-WF/WF HEAD	9.3	9.3	9.3	9.8	9.8	9.8	9.8	9.8	9.8
SUBTOTAL	31.2	31.2	31.2	32.8	32.8	32.8	32.8	32.8	32.8
TEC-PC/BAY 5	11.1	11.1	11.1	11.7	11.7	11.7	11.7	11.7	11.7
TEC-PC/PC HEAD	9.4	9.4	9.4	9.9	9.9	9.9	9.9	9.9	9.9
SUBTOTAL	20.5	20.5	20.5	21.6	21.6	21.6	21.6	21.6	21.6
REPL-HTR/BAY 1	3.4	4.6	6.0	3.4	4.6	6.0	3.4	4.6	6.0
REPL-HTR/BAY 2	1.7	2.4	3.1	1.7	2.4	3.1	1.7	2.4	3.1
REPL-HTR/BAY 3	3.3	4.5	5.9	3.3	4.5	5.9	3.3	4.5	5.9
REPL-HTR/BAY 4	3.3	4.5	5.9	3.3	4.5	5.9	3.3	4.5	5.9
REPL-HTR/WF HEADS	2.3	3.1	4.0	2.3	3.1	4.0	2.3	3.1	4.0
REPL-HTR/PC HEADS	2.3	3.1	4.0	2.3	3.1	4.0	2.3	3.1	4.0
SUBTOTAL	16.3	22.2	29.9	16.3	22.2	29.9	16.3	22.2	29.9
REPL-HTR/BAY 5	23.5	31.9	41.7	23.5	31.9	41.7	23.5	31.9	41.7
HEAT PIPES HTR	103.3	140.6	183.7	103.3	140.6	183.7	103.3	140.6	183.7
M1 MIRROR HTR	20.4	27.8	36.4	20.4	27.8	36.4	20.4	27.8	36.4

(New page created by IRN 62)

TABLE 4: MECHANISM/LAMP POWER

MECHANISM/LAMPS	POWER (W)	DURATION (TYPICAL)
o Shutter	31.4	110 msec/blade
o Pyramid Rotation	70.0	6 sec/command
o Pyramid Focus	70.0	80 msec/command
o UV Flood Mirror	70.0	12 sec/command
o SOFA	28.0	29 sec/command
o K-Spot Lamps	6.4	70 sec/command(max)
o Cal Lamps	12.8	70 sec/command(max)

(New page created by IRN 62)

TABLE 5: HEATER RESISTORS

LOCATION	RESISTANCE (each)	REMARKS
BAY 1	340-ohm	Two resistors in parallel; located on the outboard shear plate; generating 4.6 watts at 28 volts.
BAY 2	665-ohm	Two resistors in parallel; located on the outboard shear plate; generating 2.4 watts at 28 volts.
BAYS 3	348-ohm	Two resistors in parallel; located on inboard shear plate; generating 4.5 watts at 28 volts.
BAYS 4	348-ohm	Two resistors in parallel; located on inboard shear plate; generating 4.5 watts at 28 volts.
BAY 5	442-ohm	Eighteen resistors in parallel; located on the shear plate; generating 32 watts at 28 volts.
CAMERA HEADS	1020-ohm	Each camera has a 1020-ohm resistor; mounted to the electronics plate; generating 0.77 watts each at 28 volts. Total for eight camera heads: 6.2 watts.
HEAT PIPES	84.5-ohm 107-ohm	There are 16 resistors located on the radiator heat pipe saddles; each of the 12 84.5-ohm resistor generates 9.3 watts at 28 volts; each of the 4 107-ohm resistor generates 7.3 watts at 28 volts.
M1	84.5-ohm	The M1/L1 assembly has three resistors in parallel; generating 27.8 watts at 28 volts.

(New page created by IRN 62)

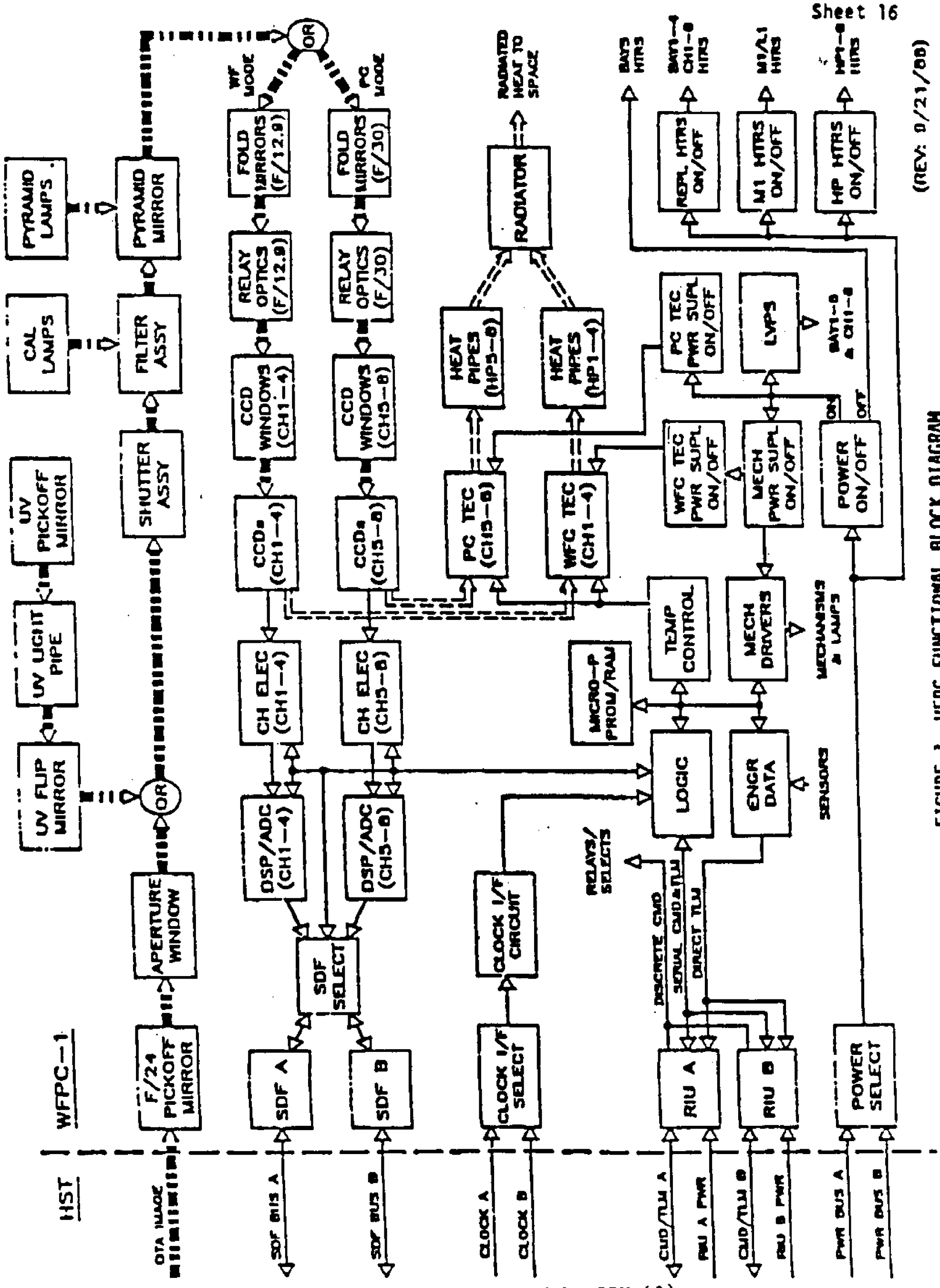

FIGURE 1 WFPC FUNCTIONAL BLOCK DIAGRAM

(New page created by IRN 62)

FIGURE 2 TEC POWER

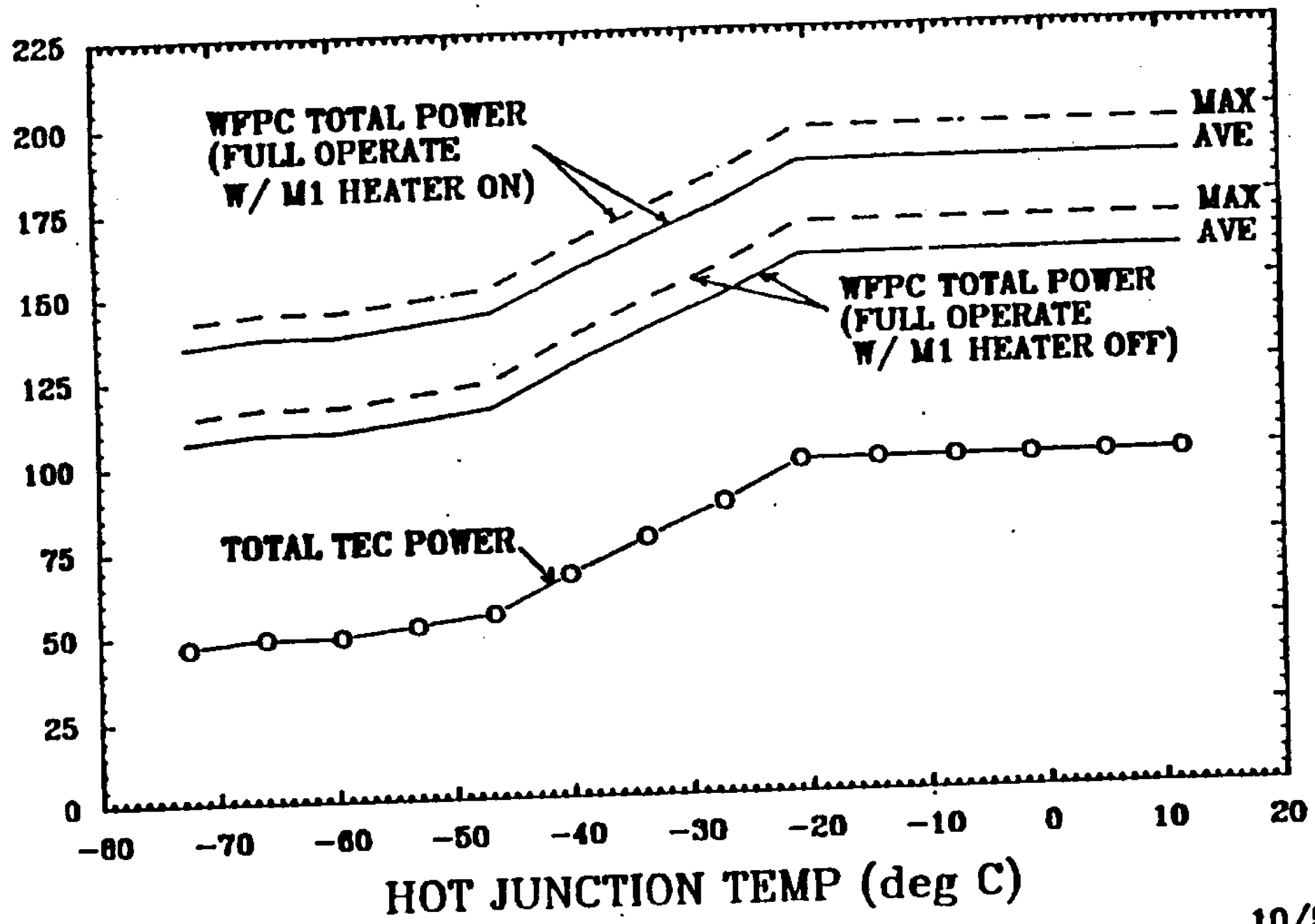

10/5/88

DEVIATION APPROVAL REQUEST

1. FOR: [XX] DEVIATION [ ] SUMMARY OF MINOR NONCONFORMANCES

2. FROM CONTRACTOR:	3. CONTRACT NUMBER:	4. REQUEST NUMBER:
JPL-WFPC	NAS 7-100	WFPC DAR-016

5. NOMENCLATURE:	6. NUMBER:	7. REVISION:	8. DATE:
WFPC-I Multi-Layer Insulation (MLI)	ST-ICD-03	Rev. F	6/29/84

9. NONCONFORMANCE:	10. MRB ACTION NO.:	11. SERIAL NUMBER(S):	12. LOT NUMBER:	13. QUANTITY:
[XX] MINOR [ ] MAJOR	N/A	N/A	N/A	N/A

14. SUPPLIER OR SUBCONTRACTOR (GIVE NAME AND ADDRESS):

JPL, 4800 Oak Grove Drive, Pasadena, CA 91109

15. SPECIFIED REQUIREMENTS:	16. DESCRIPTION OF DEPARTURE FROM REQUIREMENTS:
ST-ICD-03F, Paragraph 3.7.7.2, Multi-Layer Insulation (MLI) (see sheet 2).	The WFPC MLI resistance exceeds the resistance requirement. For details see sheet 2.

17. REASON FOR REQUEST AND/OR CORRECTIVE ACTION TAKEN:

See sheet 2.

18. REMARKS:

The increase in MLI resistance presents no ESD risk to the SI or HST.

19. CONTRACTOR CERTIFICATION: THE CONTRACTOR HEREBY CERTIFIES THAT THE ABOVE DESCRIBED DEVIATION IS A DEPARTURE THE CONTRACTUAL REQUIREMENTS IN THE QUANTITIES AND/OR CONDITIONS AS STATED ABOVE.

[ ] _____ COST ADJUSTMENT (EXPLAIN)

[XX] NO COST ADJUSTMENT

WFPC Project Manager — TITLE

SIGNATURE OF AUTHORIZED REPRESENTATIVE — 11-9-8 DATE

20. GOVERNMENT QUALITY ASSURANCE REPRESENTATIVE COMMENTS:

TITLE — SIGNATURE — DATE

21. MSFC REVIEW:

ORGANIZATION SYMBOL	REPRESENTATIVE	CONCURRENCE	NON-CONCURRENCE	D.

CONTRACTING OFFICER'S REPRESENTATIVE OR OTHER DULY DELEGATED AUTHORITY:

[ ] DISAPPROVAL (RECOMMENDED)

[ ] APPROVAL (RECOMMENDED)(WITH) (WITHOUT) PRICE ADJUSTMENT. $ _____

SIGNATURE — DATE

22. CONTRACTING OFFICER:

[ ] APPROVED

[ ] DISAPPROVED

[ ] SUBJECT TO CONDITIONS STATED ON MSFC FORM

SIGNAT

15. SPECIFIED REQUIREMENTS:

ST-ICD-03F. " 3.7.7.2 Multi-Layer Insulation (MLI). For multi-layer insulation forming an exterior surface, all the conductive MLI layers are grounded to each other and the GI structure to prevent static charge buildup. The resistance between the MLI ground connection and the outer conductive MLI layer is 100 K ohms or less. The measurement is from the ground connection to a point 1 inch distance on the MLI. The resistance from the ground connection to the SI structure ground is 1.0 ohm or less. "

16. DESCRIPTION OF DEPARTURE FROM REQUIREMENTS:

The resistance of the WFPC-I MLI measures in some cases above the required 100 K ohms, but is in no case greater than 500 K ohms. The increased resistance of the WFPC-I MLI is attributed to aging due to additional handling operations (removal and reinstallation) of the MLI during WFPC-I electronics rework.

17. REASON FOR REQUEST AND/OR CORRECTIVE ACTION:

A deviation from Requirement 3.7.7.2 of ST-ICD-03 is requested since the small increase in measured resistance represents no risk to WFPC-I, the HST or the STS per conversations with personnel at MSFC/W. Taylor (Project), K. Stevens (Project), G. Young (Project) and R. Evans (EMC); and at LMSC/D. Tenerelli (HST Project), P. Leung (M&R), and H. Pollak (EMC), and at JPL/A. Whittelsey (EMC), P. Leung (EMC), and W. Woods (Safety); and at JSC/J. Thornton (Astronaut Office). The following reasons were provided as rational for the low risk assessment.

1) The MLI surfaces of WFPC-I are internal to HST. Therefore, these surfaces are shielded and will see less electrostatic charge buildup (electron fluxes) than external HST surfaces.

2) The HST is in a relatively low inclination orbit (28 degrees), which is places the HST more benign with respect to ESD risk than higher inclined orbits (inclinations > 50 degrees).

3) The 100 K ohm resistance is considered a conservative limit by spacecraft standard.

4) Even during a M&R mission, when WFPC-I will be exposed to the external environment, the small decreased in conductance will still prevent static charge buildup.

5) The measured MLI resistance varied with applied probe pressure. When larger probe pressures could be applied, the MLI resistivity decreased.

6) Fabrication, bakeout, and replacement of selected WFPC-I blankets would result in a 4-5 week schedule slip of instrument delivery to KSC, and a total cost of about $400 K.

DEVI ION APPROVAL REQU ST

1. FOR: [X] DEVIATION [ ] SUMMARY OF MINOR NONCONFORMANCES

2. FROM CONTRACTOR:	3. CONTRACT NUMBER:	4. REQUEST NUMBER:
JPL-WFPC	NAS 7-100	WFPC DAR-015

5. NOMENCLATURE:	6. NUMBER:	7. REVISION:	8. DATE:
WFPC-I Power Allocation	ST-ICD-03	Rev. F	6/29/84

9. NONCONFORMANCE:	10. MRB ACTION NO.:	11. SERIAL NUMBER(S):	12. LOT NUMBER:	13. QUANTITY:
[X] MINOR [ ] MAJOR	N/A	N/A	N/A	N/A

14. SUPPLIER OR SUBCONTRACTOR (GIVE NAME AND ADDRESS):

JPL, 4800 Oak Grove Drive, Pasadena, CA 91109

15. SPECIFIED REQUIREMENTS:

ST-ICD-03F, Paragraph 3.7, Electrical Power. The power consumed by the SI,... (see sheet 2).

16. DESCRIPTION OF DEPARTURE FROM REQUIREMENTS:

The WFPC power usage exceeds the ICD power allocation due to previously approved design changes indicated in DAR 012 (QEH fix, M1 heater operation, and CCD boil-off heater addition). In addition to these changes, the Bay 5 replacement heaters were modified and the Mech replacement heaters were added, hence a new request for a DAR. For details see sheet 2.

17. REASON FOR REQUEST AND/OR CORRECTIVE ACTION TAKEN:

The increased power usage is required to maintain the B5A1 assembly temperature at or above -20 degrees C. For details see sheet 2.

18. REMARKS:

This DAR replaces the previously submitted/approved DAR-012 entirely.

19. CONTRACTOR CERTIFICATION: THE CONTRACTOR HEREBY CERTIFIES THAT THE ABOVE DESCRIBED DEVIATION IS A DEPARTURE FROM THE CONTRACTUAL REQUIREMENTS IN THE QUANTITIES AND/OR CONDITIONS AS STATED ABOVE.

[ ] _____ COST ADJUSTMENT (EXPLAIN)

[X] NO COST ADJUSTMENT

WFPC Project Manager — TITLE

SIGNATURE OF AUTHORIZED REPRESENTATIVE — 11/28/85 DATE

20. GOVERNMENT QUALITY ASSURANCE REPRESENTATIVE COMMENTS:

TITLE — SIGNATURE — DATE

21. MSFC REVIEW:

ORGANIZATION SYMBOL	REPRESENTATIVE	CONCURRENCE	NON-CONCURRENCE	DATE

22. CONTRACTING OFFICER'S REPRESENTATIVE OR OTHER DULY DELEGATED AUTHORITY:

[ ] DISAPPROVAL (RECOMMENDED)
[ ] APPROVAL (RECOMMENDED) (WITH) (WITHOUT) PRICE ADJUSTMENT. $ _____

SIGNATURE — DATE

23. CONTRACTING OFFICER:

[ ] APPROVED
[ ] DISAPPROVED
[ ] SUBJECT TO CONDITIONS STATED ON MSFC FORM _____-1

SIGNATURE — DATE

MSFC-Form 841 (Rev Mar 1990)

ORIGINAL

ADMIN CHANGE

15. SPECIFIED REQUIREMENTS:

This DAR applies to the SI power allocations as stated in the Radial SI to OTA and SSM Interface Control Document for the HST; ST-ICD-03F (ST/CM-08), dated 6/29/84, paragraph 3.7.

> "3.7 Electrical Power. The power consumed by the SI, including any peak power excursions, does not exceed 150 watts (averaged over one orbit period). Hold mode power not to exceed 58 watts average per orbit including remote module. This 150 watt allocation includes any power required by the SI C&DH Remote Module (RM) mounted in the SI. A peak power of 250 watts for 2 minutes per orbit is permitted as long as the thermal constraints of 3.6.1 are maintained."

16. DESCRIPTION OF DEPARTURE FROM REQUIREMENTS:

The power consumed by the WFPC instrument will exceed the 150 watts power allocation as shown in Tables 16-1 and 16-2 (sheet 3). Table 1 gives the maximum power usage for a nominal bus voltage of 28 Volts at the SI interface. Table 2 gives the maximum power usage for a bus voltage of 32 Volts. The "maximum usage" power shown in Tables 16-1 and 16-2 reflect worst-case WFPC radiator thermal environment and power regulation efficiencies.

Attached to this DAR is a copy of the WFPC-I Power Summary Report. This report gives a break down of the WFPC-I power usage for various operating modes and given various worst-case WFPC radiator thermal environments, bus voltages, and WFPC power regulation efficiencies. The modes and conditions under which WFPC will exceed the ICD power allocation are highlighted in Tables 1 and 2 in the WFPC-I Power Summary Report.

17. REASON FOR REQUEST AND/OR CORRECTIVE ACTION TAKEN:

The power consumed by the WFPC instrument has increased, for the following reason. The temperature of the B5A1 Electronic Subassembly must be maintained above -20°C to avoid glassification of the solithane conformal coat on the electronic circuit boards. The glassification phenomenon is associated with high levels of mechanical stress on solder joints.

The increases in power over levels stated in DAR-012 (see notes for Tables 16-1 and 16-2) occur only during temporary phases of the HST mission (see modes 7, 8 & 9 of JPL memorandum) which are intentionally initiated and terminated by STOCC. Increased awareness of the HST Electrical Power Subsystem configuration and energy budget is part of the planned activity management.

ADMIN CHANGE

TABLE 16-1 WFPC POWER ALLOCATION/USAGE AT 28V

WFPC MODE	ICD-03 ALLOCATION	FIRST YEAR MAX POWER USAGE	SECOND YEAR MAX POWER USAGE
Operate	150 W	197 W	170 W
Hold Mode	58 W	95 W (a)	67 W (a)
Special Modes:*			
-CCD	N/A	235 W (a)	235 W (a)
-Pre-Deploy	N/A	81 W	N/A
-Post-Deploy	N/A	244 W (b)	N/A
Peak Power	250 W	267 W	240 W

TABLE 16-2 WFPC POWER ALLOCATION/USAGE AT 32V

WFPC MODE	ICD-03 ALLOCATION	FIRST YEAR MAX POWER USAGE	SECOND YEAR MAX POWER USAGE
Operate	N/A	205 W	170 W
Hold Mode	N/A	105 W (a)	69 W (a)
Special Modes:*			
-CCD Boil-off	N/A	289 W (a)	289 W (a)
-Pre-Deploy	N/A	104 W	N/A
-Post-Deploy	N/A	317 W (b)	N/A
Peak Power	N/A	275 W	240 W

* Limited duration only (pre-planned)

(a) increase in power allocation of 7W (@ 28V) and 9W (@32V) since DAR-012

(b) increase in power allocation of 17W (@ 28V) and 21W (@32V) since DAR-012

ADMIN CHANGE

ST-ICD-03F
29-Jun-84
IRN 69
7 FEBRUARY 1992

JET PROPULSION LABORATORY

INTEROFFICE MEMORANDUM

November 22, 1989

DFM #1286

TO: Distribution

FROM: K. Leschly / D. Allestad

SUBJECT: WF/PC-I Power Summary Report

REFERENCE: (1) IOM, "WF/PC-I Power Summary Report", from D.Allestad/K.Leschly, to Distribution, dated 13 October 1988, DFM #1194.

(2) IOM, "WF/PC-I Power Consumption Report From TVT-6", from T.Bickler, to Distribution, dated 3 August 1988, DFM #1189.

This IOM documents the power consumption for the WF/PC-I baseline configuration, including the recent Bay 5 heater modification (per ECR 19166). This IOM replaces the previous reference 1 power report in its entirety. ECR 19166 was incorporated to maintain the B5A1 Electronic subassembly above -20°C and hence prevent potential damage to Bay 5 solder joints due to solithane glassification. Other than the changes imposed by ECR 19166, there is still a very good correlation between predicted power consumption and power consumption as determined from TVT-6 test data (see reference 2).

1. WF/PC-I POWER MODES

This section defines the nine WF/PC-I power modes. The nine WF/PC-I power modes, presented in the upper half of Table 1 and Table 2, list standard combinations of power loads which will be used on orbit. Table 1 list power modes and usage for the 1st year of on-orbit operation and Table 2 list the power modes and usage for the second year and beyond. WFPC-I Power modes are comprised of the following power loads which can be commanded ON/OFF independently: RIU, Low Voltage Power Supply (LVPS), Mechanism Power Supply, WF TEC power supply, PC TEC power supply, Replacement Heaters, Bay 5 Heaters (ON when LVPS is OFF), mechanism replacement heaters (ON when LVPS is ON and Mechanism Power Supply is OFF), Heat Pipe Heaters, and M1 Heaters. Figure 1 shows the functional block diagram for WF/PC-I, including each of these power loads.

ADMIN CHANGE

(SUPERSEDES PAGE 10.1-53 DATED MARCH 22 1990)

There is no commandable OFF power mode for WF/PC-I. From ECR 19153, the Bay 5 replacement heaters were connected into the LVPS ON/OFF switch. Therefore, if the LVPS is OFF then the Bay 5 Heaters are ON, and if the LVPS is ON then the Bay 5 Heaters are OFF. The HST will need to turn off power to the WF/PC power I/F in order to turn the instrument off completely.

Power is applied to the Bay 5 Replacement Heaters, when the LVPS is powered off (in power modes #6, #8, and #9). Power is applied to the MECH Replacement Heaters when MECH Power Supply is powered off and LVPS is powered on (in power modes #1 and #7). Note that it is not possible to have both Bay 5 Replacement Heaters and MECH Replacement Heaters powered on at the same time.

The following is a brief description of the standard power load combinations for each of the nine power mode.

HOLD (Mode #1)

This mode provides full command and telemetry capability. Both discrete and serial commands can be used in this mode. This is with the exception of those serial commands that command the mechanisms and TECs since no power is supplied to these two items. The Hold mode has the RIUs and the LVPS powered on. In this mode, the Mech Replacement Heaters are powered on (LVPS on and Mech power supply off) During the first year in orbit, the M1 Heaters will also be powered on (when HST power is available), to prevent contamination of the M1/L1 optics.

CONDITIONAL OPERATE (Mode #2)

The conditional operate mode is used as a transition mode from HOLD modes to one of the three operating modes (Full Operate, WFC Operate, and PC Operate). Both discrete and serial commands can be used in this mode with the exception of those serial commands that require use of TECs since no power is supplied to the TECs. The Conditional Operate mode has the RIUs, the LVPS, and the Mechanism Power Supply powered on. During the first year in orbit, the M1 Heaters will also be powered on (when HST power is available), to prevent contamination of the M1/L1 optics.

FULL OPERATE (Mode #3)

Following the OV-phase and initial UV-flood, WF/PC-I is expected to remain in full operate mode during all normal HST operations. Once in the Full Operate mode, the instrument can take pictures with either the WFC or the PC upon command. Although both camera systems are operating, only one camera (WFC or PC) can take pictures at one time. The Full Operate mode has the RIUs, the LVPS, the Mechanisms Power Supply, and both WFC and PC Thermal Electric Coolers (TECs) powered on. During the first year in orbit, the M1 Heaters will also be powered on (when HST power is available), to prevent contamination of the M1/L1 optics.

WFC OPERATE (Mode #4)

In the event of a problem such as a failure in the HST power subsystem that limits the amount of power available to WF/PC or an anomaly with the PC detectors, WF/PC can be configured to operate with only the WFC detectors. The Operate-WFC mode has the RIUs, the LVPS, the Mechanisms Power Supply, and WFC TECs powered on. During the first year in orbit, the M1 Heaters will also be powered on (when HST power is available), to prevent contamination of the M1/L1 optics.

PC OPERATE (Mode #5)

In the event of a problem such as a failure in the HST power subsystem that limits the amount of power available to WF/PC or an anomaly with the WFC detectors, WF/PC can be configured to operate with only the PC detectors. The Operate-PC mode has the RIUs, the LVPS, the Mechanisms Power Supply, and PC TECs powered on. During the first year in orbit, the M1 Heaters will also be powered on (when HST power is available), to prevent contamination of the M1/L1 optics.

SAFE (Mode #6)

This mode is used to maintain WF/PC-I in a thermally safe state during HST safing operations. This mode will provide limited commands (discrete commands only) and RIU direct telemetry since the LVPS is not powered on. The Safe mode has the RIUs, the Replacement Heaters (Bay 1 - 4 and Camera Head electronics), and Bay 5 heaters (since LVPS is OFF) powered on. The Bay 5 heaters will be powered on whenever LVPS is off, and HST power to WF/PC is on. During the first year in orbit, the M1 Heaters will also be powered on (when HST power is available), to prevent contamination of the M1/L1 optics.

CCD BOIL-OFF (Mode #7)

This mode is used during on-orbit operations to ensure adequate removal of contaminants from the CCDs. The CCD Boil-Off mode has the RIUs, the LVPS, the Heat Pipe Heaters, the Mech replacement heaters, and the M1 Heaters powered on.

HST-DEPLOYMENT (Mode #8)

This mode is used while in the Shuttle Payload Bay, and when the HST is on internal battery power only, until after HST Solar Array deployment and initial sun acquisition. This is a critical battery power time for the HST. This mode is used to maintain the Bay 5 electronics warm. The HST-Deployment mode has the RIUs, the Bay 5 heaters (LVPS Off), and the M1 Heaters powered on.

POST-DEPLOYMENT (Mode #9)

This mode is used following the time when the HST Solar Arrays have recharged the HST batteries. This mode is used to keep the Bay 5 electronics warm and keep the radiator and M1/L1 optics free of contaminants. The Post-Deployment mode has the RIUs, the Replacement Heaters, the Bay 5 heaters (LVPS Off), the Heat Pipe Heaters, and the M1 Heaters powered on.

2. INSTRUMENT POWER CONSUMPTION SUMMARY

This section summarizes the total WF/PC-I power consumption. The lower half of Tables 1 and 2 give the total power summary for WF/PC-I.

The instrument receives power from the Space Telescope from two interface (I/F) sources. One I/F source powers the RIUs and the second I/F source powers the rest of the instrument. The RIUs consume about 4 watts. The rest of the instrument consumes power based on the selected combinations of power supplies and resistive loads which are powered on. Total power consumed by the instrument is then the power consumed by the RIUs plus the power consumed by the rest of the instrument.

Both tables give the power summary for all nine modes at different WF/PC radiator environments/fluxes (hot/cold), at different power levels (average/maximum), and at different bus voltages (24 V, 28 V, 32 V).

The two WF/PC Radiator Environments/Fluxes used in Tables 1 and 2, assumes realistic hot radiator fluxes and realistic cold radiator fluxes. Note that these conditions do not coincide with HST realistic hot and cold orbits. TEC power supplies vary as a function of radiator flux. For hot/warm fluxes (and warm Hot Junction temperatures), the TECs will draw 1.1 Amps. For cold fluxes (and cold Hot Junction temperatures), the TECs current is reduced to about 0.6 Amps. Figure 2 shows WF/PC power as a function of Hot Junction temperature.

The two power levels referred to in Tables 1 and 2 reflect average power and maximum power for steady state operations of durations longer than 2 minutes per orbit. Average power is the power consumption averaged over an orbit and with power supplies at average efficiency. Maximum power reflects an increase in power (i.e. 5% above average) given worst-case efficiency of the power supplies. Variations in the power supply efficiency affect only the power supplies.

Peak power is the maximum power consumption with a duration less than 2 minutes per orbit, not including turn-on transient power levels. Peak power reflects maximum power plus any additional power required to operate a mechanism or lamp. Peak power is shown in Tables 3A and 3B only (see section 3 below).

The HST power bus provides unregulated power to the WF/PC power interface. The voltage from this unregulated bus can vary from 24 volts to 32 volts (ICD limits). Nominal voltage is 28 volts. Tables 1 and 2 show the instrument total power consumption for 24, 28, and 32 volts.

3. WF/PC-I SUBASSEMBLY POWER DISSIPATION

This section provides the detail subassembly average/maximum/peak power dissipation for each of the main power supplies and resistive loads, as a function of radiator fluxes and bus voltage. Tables 3A and 3B show the average/maximum/peak power dissipation for WF/PC hot and cold orbits respectively, at three different bus voltages (24 V/28 V/32 V) for each subassembly.

4. MECHANISM POWER CONSUMPTION

This section contains the power consumption and power-on duration for each of the WF/PC mechanisms and lamps, see Table 4. These loads must be added to the maximum power to get the peak power consumption for durations shorter than 2 minutes per orbit (ICD definition of peak power). The pyramid mechanism which has one of the highest power consumption is used in Tables 3A and 3B for peak power.

5. HEATERS

This section contains the power consumption for each of the WF/PC heater loads. Table 5 lists the resistor and power for each resistive heater load used on WF/PC-I.

(SUPERSEDES PAGE 10.1-57 DATED MARCH 22 1990)

ADMIN
CHANGE

TABLE 1: WFPC-I POWER MODES AND USAGE (1ST YEAR OPERATIONS)

WFPC POWER MODES	HOLD (1)	COND OPER (2)	FULL OPER (3)	WTEC OPER (4)	PTEC OPER (5)	SAFE (6)	BOIL OFF (7)	HST DEPL (8)	POST DEPL (9)
R1U POWER	ON	ON	ON	ON	ON	ON	ON	ON	ON
LOW VOLTAGE POWER	ON	ON	ON	ON	ON	-	ON	-	-
MECH POWER	-	ON	ON	ON	ON	-	-	-	-
WF TEC POWER	-	-	ON	ON	-	-	-	-	-
PC TEC POWER	-	-	ON	-	ON	-	-	-	-
REPL HEATERS (INTERNAL)	-	-	-	-	-	ON	-	-	ON
BAYS REPL HEATERS	-	-	-	-	-	ON	-	ON	ON
MECH REPL HEATERS	ON	-	-	-	-	-	ON	-	-
HEAT PIPE HEATERS	-	-	-	-	-	-	ON	-	ON
MI HEATERS	ON	ON	ON	ON	ON	ON	-ON	ON	ON

WFPC POWER USAGE (W)			HOLD (1)	COND OPER (2)	FULL OPER (3)	WTEC OPER (4)	PTEC OPER (5)	SAFE (6)	BOIL OFF (7)	HST DEPL (8)	POST DEPL (9)
HOT RADIATOR FLUXES	AVERAGE POWER	@ 24V	80.2	85.2	179.4	130.3	134.3	76.4	183.5	60.1	179.7
		@ 28V	89.6	92.6	186.8	137.7	141.7	102.5	230.2	80.3	243.1
		@ 32V	100.5	101.1	195.3	146.2	150.2	132.7	284.1	103.7	316.3
	MAXIMUM POWER	@ 24V	84.7	94.7	189.0	137.5	146.2	76.4	188.0	60.1	179.7
		@ 28V	94.1	102.1	196.4	144.9	153.6	102.5	234.7	80.3	243.1
		@ 32V	105.0	110.6	204.9	153.4	162.1	132.7	288.6	103.7	316.3
COLD RADIATOR FLUXES	AVERAGE POWER	@ 24V	80.2	85.2	132.6	112.1	105.7	76.4	183.5	60.1	179.7
		@ 28V	89.6	92.6	140.0	119.5	113.1	102.5	230.2	80.3	243.1
		@ 32V	100.5	101.1	148.5	128.0	121.6	132.7	284.1	103.7	316.3
	MAXIMUM POWER	@ 24V	84.7	94.7	140.1	118.5	116.3	76.4	188.0	60.1	179.7
		@ 28V	94.1	102.1	147.5	125.9	123.7	102.5	234.7	80.3	243.1
		@ 32V	105.0	110.6	156.0	134.4	132.2	132.7	288.6	103.7	316.3

Boxed Numbers indicate conditions which exceeds the ICD power allocation

TABLE 2: WFPC-1 POWER MODES AND USAGE (2ND YEAR OPERATIONS AND BEYOND)

WFPC POWER MODES	HOLD (1)	COND OPER (2)	FULL OPER (3)	NTEC OPER (4)	PTEC OPER (5)	SAFE (6)	BOIL OFF (7)	HST DEPL (8)	POST DEPL (9)
RIU POWER	ON	ON	ON	ON	ON	ON	ON	N/A	N/A
LOW VOLTAGE POWER	ON	ON	ON	ON	ON	-	ON	N/A	N/A
MECH POWER	-	ON	ON	ON	ON	-	-	N/A	N/A
WF TEC POWER	-	-	ON	ON	-	-	-	N/A	N/A
PC TEC POWER	-	-	ON	-	ON	-	-	N/A	N/A
REPL HEATERS (INTERNAL)	-	-	-	-	-	ON	-	N/A	N/A
BAYS REPL HEATERS	-	-	-	-	-	ON	-	N/A	N/A
MECH REPL HEATERS	ON	-	-	-	-	-	ON	N/A	N/A
HEAT PIPE HEATERS	-	-	-	-	-	-	ON	N/A	N/A
MI HEATERS	-	-	-	-	-	-	ON	N/A	N/A

WFPC POWER USAGE (W)			HOLD (1)	COND OPER (2)	FULL OPER (3)	NTEC OPER (4)	PTEC OPER (5)	SAFE (6)	BOIL OFF (7)	HST DEPL (8)	POST DEPL (9)
HOT RADIATOR FLUXES	AVERAGE POWER	@ 24V	59.7	64.8	159.0	109.9	113.9	55.9	183.5	N/A	N/A
		@ 28V	61.8	64.8	159.0	109.9	113.9	74.7	230.2	N/A	N/A
		@ 32V	64.2	64.8	159.0	109.9	113.9	96.3	284.1	N/A	N/A
	MAXIMUM POWER	@ 24V	64.2	74.3	168.6	117.1	125.8	55.9	188.0	N/A	N/A
		@ 28V	66.3	74.3	168.6	117.1	125.8	74.7	234.7	N/A	N/A
		@ 32V	68.7	74.3	168.6	117.1	125.8	96.3	288.6	N/A	N/A
COLD RADIATOR FLUXES	AVERAGE POWER	@ 24V	59.7	64.8	112.2	91.7	85.3	55.9	183.5	N/A	N/A
		@ 28V	61.8	64.8	112.2	91.7	85.3	74.7	230.2	N/A	N/A
		@ 32V	64.2	64.8	112.2	91.7	85.3	96.3	284.1	N/A	N/A
	MAXIMUM POWER	@ 24V	64.2	74.3	119.7	98.1	95.9	55.9	188.0	N/A	N/A
		@ 28V	66.3	74.3	119.7	98.1	95.9	74.7	234.7	N/A	N/A
		@ 32V	68.7	74.3	119.7	98.1	95.9	96.3	288.6	N/A	N/A

Boxed numbers indicate conditions which exceeds the ICD power allocatio

TABLE 3A: WFPC-I SUBASSEMBLY POWER DISSIPATION (HOT RADIATOR FLUXES)

	AVERAGE POWER (W)			MAXIMUM POWER (W)			PEAK POWER (W)		
BUS V	24.0	28.0	32.0	24.0	28.0	32.0	24.0	28.0	32.0
LOAD/LOC									
RIUs/BAY2	4.0	4.0	4.0	4.0	4.0	4.0	4.0	4.0	4.0
LVPS/BAY1	5.0	5.0	5.0	5.0	5.0	5.0	5.0	5.0	5.0
LVPS/BAY2	2.8	2.8	2.8	4.8	4.8	4.8	4.8	4.8	4.8
LVPS/BAY3	3.2	3.2	3.2	3.2	3.2	3.2	3.2	3.2	3.2
LVPS/BAY4	3.2	3.2	3.2	3.2	3.2	3.2	3.2	3.2	3.2
LVPS/BAY5	31.0	31.0	31.0	33.5	33.5	33.5	33.5	33.5	33.5
LVPS/WF-CH	2.4	2.4	2.4	2.4	2.4	2.4	2.4	2.4	2.4
LVPS/PC-CH	2.4	2.4	2.4	2.4	2.4	2.4	2.4	2.4	2.4
SUBTOTAL	50.0	50.0	50.0	54.5	54.5	54.5	54.5	54.5	54.5
MECH/BAY1	0.8	0.8	0.8	0.8	0.8	0.8	21.6	21.6	21.6
MECH(OFF&LVPSON)/BAY5	5.7	7.8	10.2	5.7	7.8	10.2	5.7	7.8	10.2
MECH(WTEC-OFF)/BAY5	10.0	10.0	10.0	15.0	15.0	15.0	38.8	38.8	38.8
MECH(WTEC-ON)/BAY5	5.7	5.7	5.7	6.0	6.0	6.0	29.8	29.8	29.8
MECH/MECHANISM	0.0	0.0	0.0	0.0	0.0	0.0	70.0	70.0	70.0
SUBTOTAL(MECH-OFF)	5.7	7.8	10.2	5.7	7.8	10.2	5.7	7.8	10.2
SUBTOTAL(WTEC-OFF)	10.8	10.8	10.8	15.8	15.8	15.8	130.4	130.4	130.4
SUBTOTAL(WTEC-ON)	6.5	6.5	6.5	6.8	6.8	6.8	121.4	121.4	121.4
WTEC/BAY5	19.5	19.5	19.5	20.4	20.4	20.4	20.4	20.4	20.4
WTEC/WF-CH	29.9	29.9	29.9	31.4	31.4	31.4	31.4	31.4	31.4
SUBTOTAL	49.4	49.4	49.4	51.8	51.8	51.8	51.8	51.8	51.8
PTEC/BAY5	20.1	20.1	20.1	21.1	21.1	21.1	21.1	21.1	21.1
PTEC/PC-CH	29.0	29.0	29.0	30.4	30.4	30.4	30.4	30.4	30.4
SUBTOTAL	49.1	49.1	49.1	51.5	51.5	51.5	51.5	51.5	51.5
REPL-HTR/BAY1	3.4	4.6	6.0	3.4	4.6	6.0	3.4	4.6	6.0
REPL-HTR/BAY2	1.8	2.4	3.1	1.8	2.4	3.1	1.8	2.4	3.1
REPL-HTR/BAY3	3.3	4.5	5.9	3.3	4.5	5.9	3.3	4.5	5.9
REPL-HTR/BAY4	3.3	4.5	5.9	3.3	4.5	5.9	3.3	4.5	5.9
REPL-HTR/WF-CH	2.3	3.1	4.0	2.3	3.1	4.0	2.3	3.1	4.0
REPL-HTR/PC-CH	2.3	3.1	4.0	2.3	3.1	4.0	2.3	3.1	4.0
SUBTOTAL	16.3	22.2	29.0	16.3	22.2	29.0	16.3	22.2	29.0
REPL-HTR/BAY5	35.6	48.5	63.3	35.6	48.5	63.3	35.6	48.5	63.3
HEAT PIPE HTRS	103.3	140.6	183.6	103.3	140.6	183.6	103.3	140.6	183.6
M1 MIRROR HTRS	20.4	27.8	36.3	20.4	27.8	36.3	20.4	27.8	36.3

TABLE 3B: WFPC-1 SUBASSEMBLY POWER DISSIPATION (COLD RADIATOR FLUXES)

	AVERAGE POWER (W)			MAXIMUM POWER (W)			PEAK POWER (W)		
BUS V	24.0	28.0	32.0	24.0	28.0	32.0	24.0	28.0	32.0
LOAD/LOC									
RIUs/BAY2	4.0	4.0	4.0	4.0	4.0	4.0	4.0	4.0	4.0
LVPS/BAY1	5.0	5.0	5.0	5.0	5.0	5.0	5.0	5.0	5.0
LVPS/BAY2	2.8	2.8	2.8	4.8	4.8	4.8	4.8	4.8	4.8
LVPS/BAY3	3.2	3.2	3.2	3.2	3.2	3.2	3.2	3.2	3.2
LVPS/BAY4	3.2	3.2	3.2	3.2	3.2	3.2	3.2	3.2	3.2
LVPS/BAY5	31.0	31.0	31.0	33.5	33.5	33.5	33.5	33.5	33.5
LVPS/WF-CH	2.4	2.4	2.4	2.4	2.4	2.4	2.4	2.4	2.4
LVPS/PC-CH	2.4	2.4	2.4	2.4	2.4	2.4	2.4	2.4	2.4
SUBTOTAL	50.0	50.0	50.0	54.5	54.5	54.5	54.5	54.5	54.5
MECH/BAY1	0.8	0.8	0.8	0.8	0.8	0.8	21.6	21.6	21.6
MECH(OFF&LVPSON)/BAY5	5.7	7.8	10.2	5.7	7.8	10.2	5.7	7.8	10.2
MECH(WTEC-OFF)/BAY5	10.0	10.0	10.0	15.0	15.0	15.0	38.8	38.8	38.8
MECH(WTEC-ON)/BAY5	5.7	5.7	5.7	6.0	6.0	6.0	29.8	29.8	29.8
MECH/MECHANISM	0.0	0.0	0.0	0.0	0.0	0.0	70.0	70.0	70.0
SUBTOTAL(MECH-OFF)	5.7	7.8	10.2	5.7	7.8	10.2	5.7	7.8	10.2
SUBTOTAL(WTEC-OFF)	10.8	10.8	10.8	15.8	15.8	15.8	130.4	130.4	130.4
SUBTOTAL(WTEC-ON)	6.5	6.5	6.5	6.8	6.8	6.8	121.4	121.4	121.4
WTEC/BAY5	21.9	21.9	21.9	23.0	23.0	23.0	23.0	23.0	23.0
WTEC/WF-CH	9.3	9.3	9.3	9.8	9.8	9.8	9.8	9.8	9.8
SUBTOTAL	31.2	31.2	31.2	32.8	32.8	32.8	32.8	32.8	32.8
PTEC/BAY5	11.1	11.1	11.1	11.7	11.7	11.7	11.7	11.7	11.7
PTEC/PC-CH	9.4	9.4	9.4	9.9	9.9	9.9	9.9	9.9	9.9
SUBTOTAL	20.5	20.5	20.5	21.6	21.6	21.6	21.6	21.6	21.6
REPL-HTR/BAY1	3.4	4.6	6.0	3.4	4.6	6.0	3.4	4.6	6.0
REPL-HTR/BAY2	1.8	2.4	3.1	1.8	2.4	3.1	1.8	2.4	3.1
REPL-HTR/BAY3	3.3	4.5	5.9	3.3	4.5	5.9	3.3	4.5	5.9
REPL-HTR/BAY4	3.3	4.5	5.9	3.3	4.5	5.9	3.3	4.5	5.9
REPL-HTR/WF-CH	2.3	3.1	4.0	2.3	3.1	4.0	2.3	3.1	4.0
REPL-HTR/PC-CH	2.3	3.1	4.0	2.3	3.1	4.0	2.3	3.1	4.0
SUBTOTAL	16.3	22.2	29.0	16.3	22.2	29.0	16.3	22.2	29.0
REPL-HTR/BAY5	35.6	48.5	63.3	35.6	48.5	63.3	35.6	48.5	63.3
HEAT PIPE HTRS	103.3	140.6	183.6	103.3	140.6	183.6	103.3	140.6	183.6
M1 MIRROR HTRS	20.4	27.8	36.3	20.4	27.8	36.3	20.4	27.8	36.3

ADMIN CHANGE

(SUPERSEDES PAGE 10.1-61 DATED MARCH 22 1990)

TABLE 4: MECHANISM/LAMP POWER

MECHANISM/LAMPS	POWER (W)	DURATION (TYPICAL)
o Shutter	31.4	110 msec/blade
o Pyramid Rotation	70.0	6 sec/command
o Pyramid Focus	70.0	80 msec/command
o UV Flood Mirror	70.0	12 sec/command
o SOFA	28.0	29 sec/command
o K-Spot Lamps	6.4	70 sec/command(max)
o Cal Lamps	12.8	70 sec/command(max)

TABLE 5: HEATER RESISTORS

LOCATION	RESISTANCE (ohms each)	REMARKS
BAY 1	340	Two resistors in parallel; located on the outboard shear plate; generating 4.6 watts at 28 volts.
BAY 2	665	Two resistors in parallel; located on the outboard shear plate; generating 2.4 watts at 28 volts.
BAY 3	348	Two resistors in parallel; located on the inboard shear plate; generating 4.5 watts at 28 volts.
BAY 4	348	Two resistors in parallel; located on the inboard shear plate; generating 4.5 watts at 28 volts.
BAY 5	442/340/511	BAY 5 Replacement Heaters: Ten 442-ohm resistors; and eight 340-ohm resistors in parallel with eight 511-ohm resistors; the 442, 340, and 511-ohm resistors are wired in parallel and located on the Bay 5 shear plate; generating a total of 48.5 watts at 28 volts.
	200	MECH Replacement Heaters: Two 200-ohm resistors in parallel; they are located in Bay 5 and activated when in the "Hold" and "CCD Boil-off" modes (LVPS on and MECH/TEC off); generating 7.8 watts at 28 volts.
CAMERA HEADS	1020	Each camera has a 1020-ohm resistor; mounted to the electronics plate; generating 0.77 watts each at 28 volts. Total for eight camera heads: 6.2 watts.
HEAT PIPES	84.5/107	There are 16 resistors located on the radiator heat pipe saddles; each of the 12 84.5-ohm resistor generates 9.3 watts at 28 volts; each of the 4 107-ohm resistor generates 7.3 watts at 28 volts.
M1	84.5	The M1/L1 assembly has three resistors in parallel; generating 27.8 watts at 28 volts.

ADMIN CHANGE

FIGURE 1: WFPC-I FUNCTIONAL BLOCK DIAGRAM

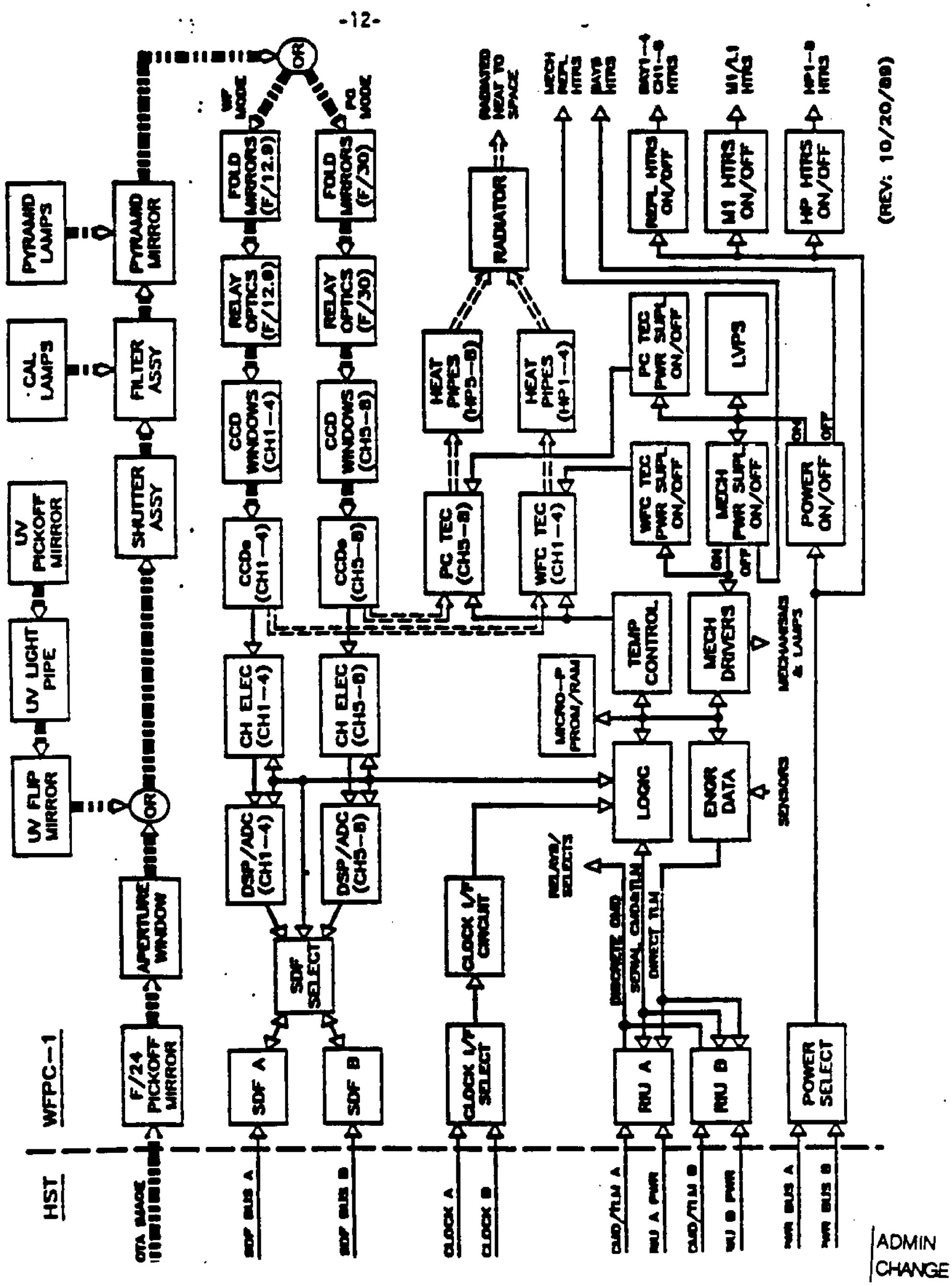

ADMIN CHANGE

FIGURE 1a: REPLACEMENT HEATERS ELECTRICAL DETAIL

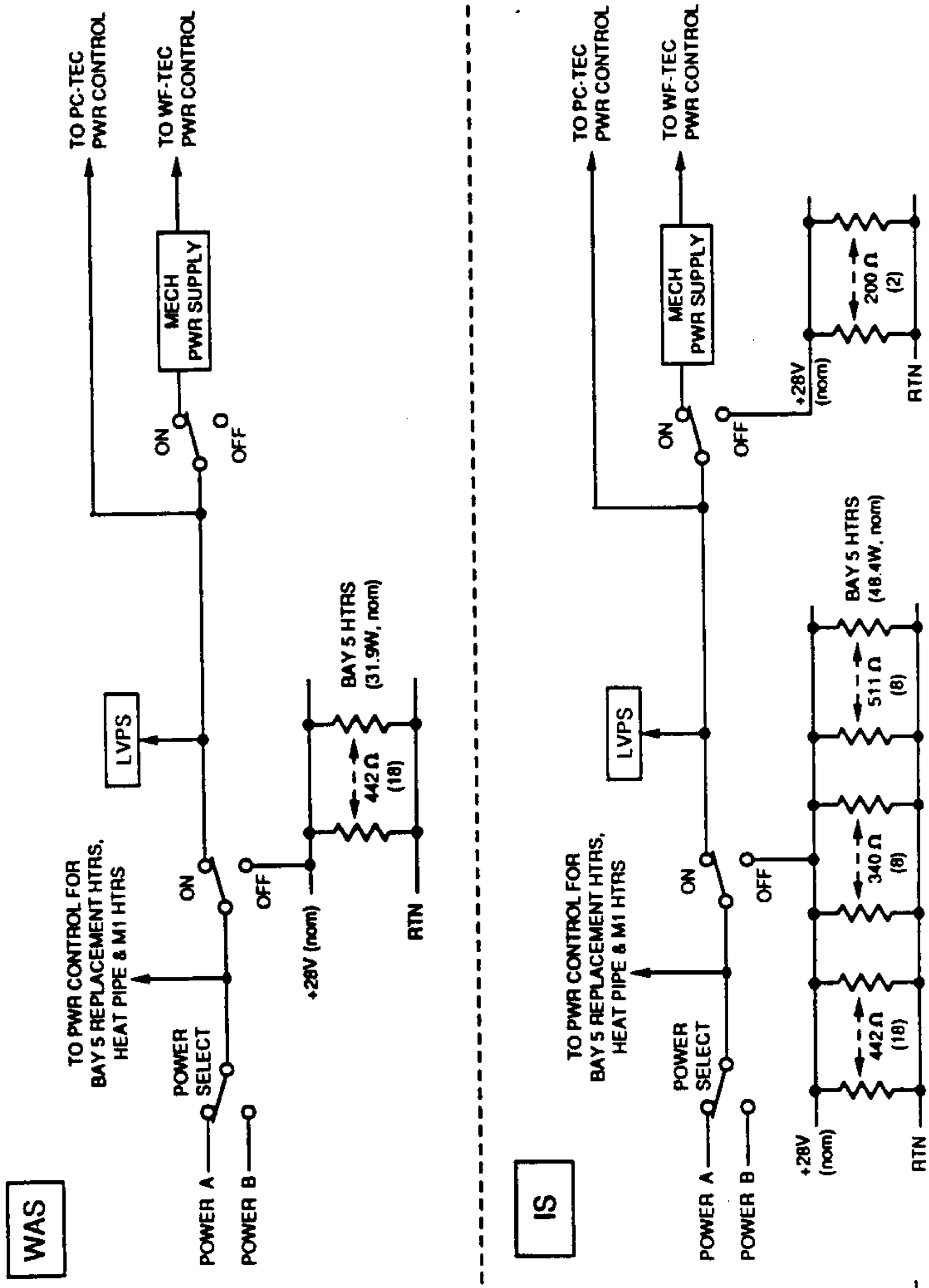

ADMIN CHANGE

(SUPERSEDES PAGE 10.1-65 DATED MARCH 22 1990)

FIGURE 2 TEC POWER

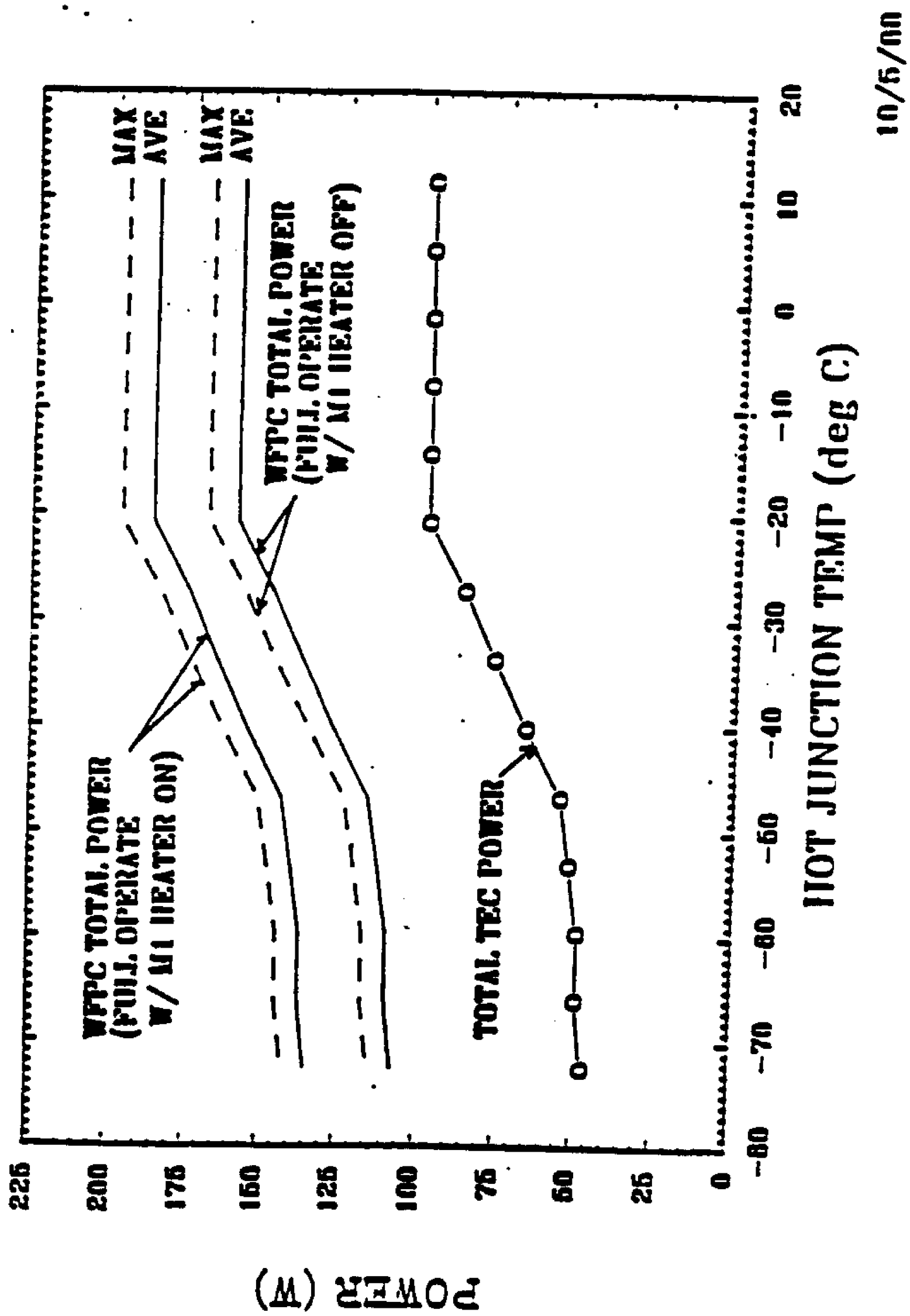

10/5/00

ADMIN
CHANGE

ST-ICD-03F
29 JUNE 1984
IRN 69
7 FEBRUARY 1992

DEVIATION APPROVAL REQUEST

1. FOR: [XX] DEVIATION [ ] SUMMARY OF MINOR NONCONFORMANCES

2. FROM CONTRACTOR:	3. CONTRACT NUMBER:	4. REQUEST NUMBER:
JPL Wide Field/Planetary Camera	NAS 7-100	DAR 17

5. NOMENCLATURE:	6. NUMBER:	7. REVISION:	8. DATE:
WFPC-2 latch shear pins	ST-ICD-03	Rev. F	10/7/91

9. NONCONFORMANCE:	10. MRB ACTION NO.:	11. SERIAL NUMBER(S):	12. LOT NUMBER:	13. QUANTITY:
[XX] MINOR [ ] MAJOR	N/A	N/A	N/A	

14. SUPPLIER OR SUBCONTRACTOR (GIVE NAME AND ADDRESS):
JPL, 4800 Oak Grove Ave./Pasadena, CA, 91109

15. SPECIFIED REQUIREMENTS:
ST-ICD-03F, Figure 3.3-4 and
Figure 3.3-5

(see attached)

16. DESCRIPTION OF DEPARTURE FROM REQUIREMENTS:
WFPC shear pin hole diameters are out-of-tolerance.

17. REASON FOR REQUEST AND/OR CORRECTIVE ACTION TAKEN:
Drilling difficulties require the solution be designed into the shear pins.

18. REMARKS:
Shear pins are GFE originally manufactured by HDOS.
Attached memo describes the 3 shear pins which must be manufactured.

19. CONTRACTOR CERTIFICATION: THE CONTRACTOR HEREBY CERTIFIES THAT THE ABOVE DESCRIBED DEVIATION IS A DEPARTURE FROM THE CONTRACTUAL REQUIREMENTS IN THE QUANTITIES AND/OR CONDITIONS AS STATED ABOVE.

[ ] _____ COST ADJUSTMENT (EXPLAIN)
[ ] NO COST ADJUSTMENT

WFPC Project Mngr. (TITLE) _____ (SIGNATURE OF AUTHORIZED REPRESENTATIVE) 10/10/91 (DATE)

20. GOVERNMENT QUALITY ASSURANCE REPRESENTATIVE COMMENTS:

TITLE SIGNATURE DATE

21. MSFC REVIEW:

ORGANIZATION SYMBOL	REPRESENTATIVE	CONCURRENCE	NON-CONCURRENCE	DATE
				2/7/92
		Deputy Associate Director of Flight Projects for HST		

22. CONTRACTING OFFICER'S REPRESENTATIVE OR OTHER DULY DELEGATED AUTHORITY:
[ ] DISAPPROVAL (RECOMMENDED)
[ ] APPROVAL (RECOMMENDED)(WITH) (WITHOUT) PRICE ADJUSTMENT. $ _____

SIGNATURE DATE

23. CONTRACTING OFFICER:
[ ] APPROVED
[ ] DISAPPROVED
[ ] SUBJECT TO CONDITIONS STATED ON MSFC FORM _____

SIGNATURE DATE

MSFC - Form 847 (Rev May 1969)

(NEW PAGE CREATED BY IRN 69)

ST-ICD-03F
29 JUNE 1984
IRN 69
7 FEBRUARY 1992

WAS

DAR 17

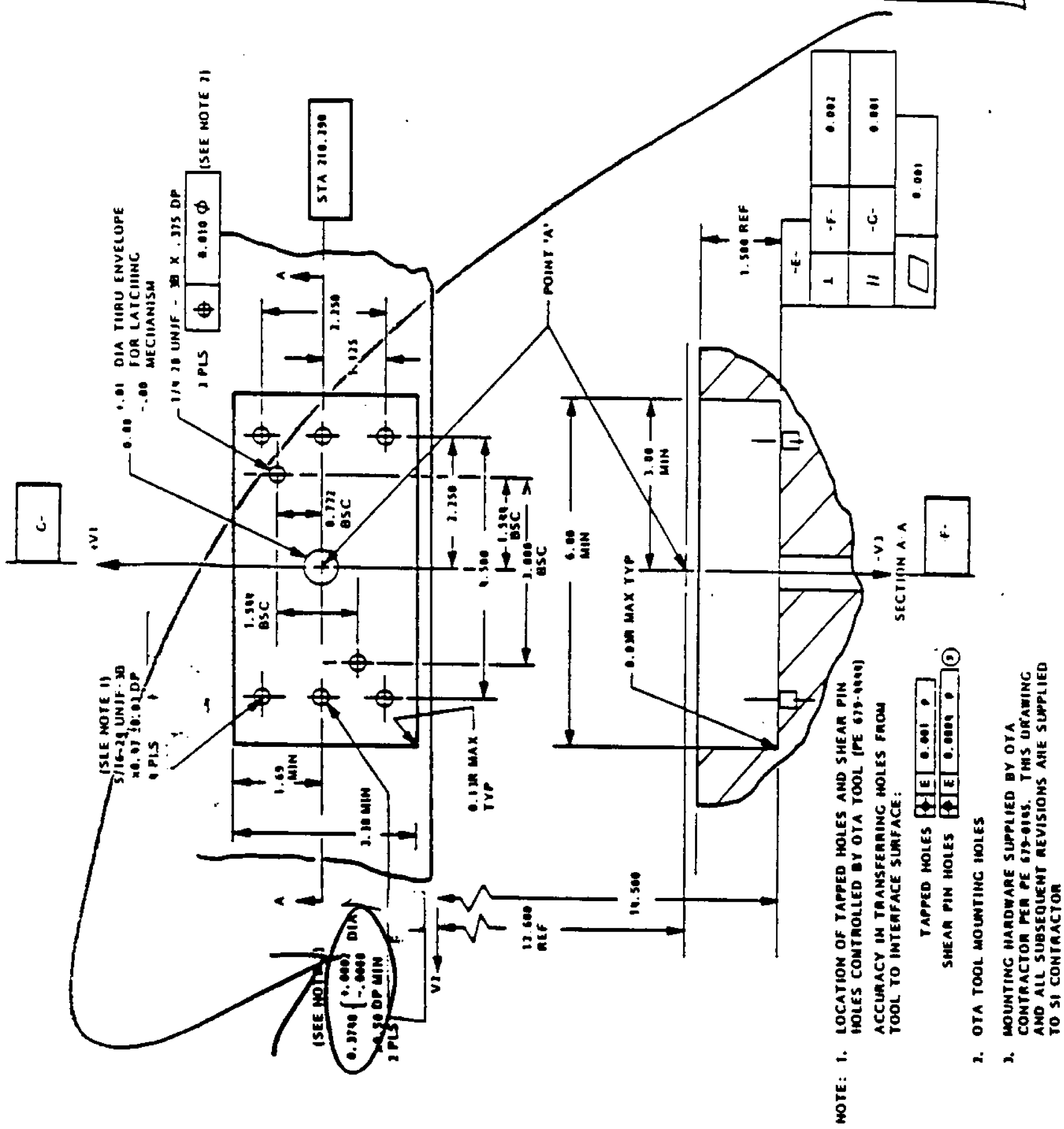

Figure 3.3-4 Mount 'A' Interface

Admin

(NEW PAGE CREATED BY IRN 69)

WAS

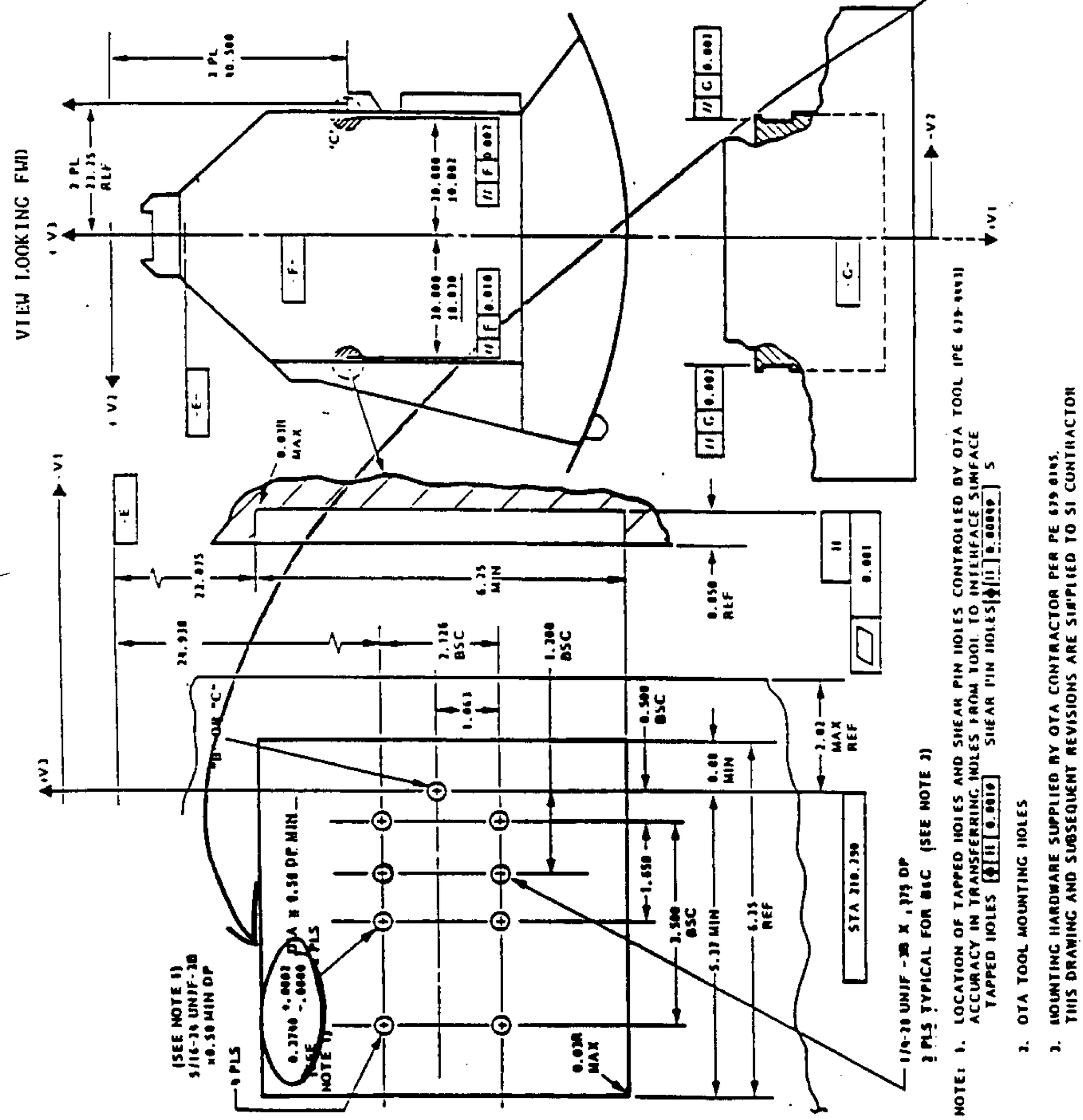

Figure 3.3-5 Radial SI Mount Points B & C Interface

(NEW PAGE CREATED BY IRN 69)

2. Pin located at PT.C (-V3 side)

- Hole diameter in housing measures .3755/.3754 of an inch
- Should be .3748 +.0002 -.0000
- Make modified Pin 679-4533-001
- Make per print except diameter needs to be .3759 -.0002 +.0000 over the .480 in. long section from the end opposite the flats
- Make from 416 cres. per note 3 on 679-6824-002, Sheet 1 (the material description in this note meets the specifications of MS 16555-661 pin which the original pins were made from).

3. Pin located at PT.C (+V3 side)

- Hole diameter in housing measures .3758 of an inch from its opening to a depth of .18 in. The remainder measures .3749/.3748, as it should.
- Make modified Pin 679-6471-003
- Make per print except diameter needs to be .3763 -.0002 +.0000 over a .180 long section starting .300 from the end and not to extend beyond .480
- Make from 416 cres. per note 3 on 679-6824-002, Sheet 1 (the material description in this note meets the specifications of MS 16555-660 pin which the original pins were made from).

Attachments

cc: M. J. Argoud
A. J. Delgadillo
R. A. Hall
D. S. Hess
B. K. Muirhead
J. R. Staats
J. W. Stultz
K. R. Wayner

DEVIATION APPROVAL REQUEST

FOR: ☒ DEVIATION ☐ SUMMARY OF MINOR NONCONFORMANCES

FROM CONTRACTOR:	3. CONTRACT NUMBER:	4. REQUEST NUMBER:
JPL - WF/PC-II	ST-ICD-03F SSM/OTA/SI	018

5. NOMENCLATURE:	6. NUMBER:	7. REVISION:	8. DATE:
WF/PC-II EMC Requirements	ST-ICD-03 SSM/OTA/SI	F	03/31/93

9. NONCONFORMANCE:	10. MRB ACTION NO.:	11. SERIAL NUMBER(S):	12. LOT NUMBER:	13. QUANTITY:
☒ MINOR ☐ MAJOR	N/A	N/A	N/A	N/A

14. SUPPLIER OR SUBCONTRACTOR (GIVE NAME AND ADDRESS):
JET PROPULSION LABORATORY, 4800 Oak Grove Drive, Pasadena, CA. 91109

15. SPECIFIED REQUIREMENTS:
ST-ICD-03F
Para. 3.7.8.3 - SI Generated Ripple and Noise

16. DESCRIPTION OF DEPARTURE FROM REQUIREMENTS:
NB conducted emissions exceed the ICD limits by 6 dB at 100 kHz and by 8 dB at 150 kHz.

17. REASON FOR REQUEST AND/OR CORRECTIVE ACTION TAKEN:
Any corrective actions would require significant resources.

REMARKS:
WF/PC-II is in compliance with the BB conducted emissions requirements.

19. CONTRACTOR CERTIFICATION: THE CONTRACTOR HEREBY CERTIFIES THAT THE ABOVE DESCRIBED DEVIATION IS A DEPARTURE FROM THE CONTRACTUAL REQUIREMENTS IN THE QUANTITIES AND/OR CONDITIONS AS STATED ABOVE.

☐ _____ COST ADJUSTMENT (EXPLAIN)
☒ NO COST ADJUSTMENT

Program Mgr — Larry T. Simmons — 3/31/93
TITLE — SIGNATURE OF AUTHORIZED REPRESENTATIVE — DATE

20. GOVERNMENT QUALITY ASSURANCE REPRESENTATIVE COMMENTS:

TITLE — SIGNATURE — DATE

21. MSFC REVIEW:

ORGANIZATION SYMBOL	REPRESENTATIVE	CONCURRENCE	NON-CONCURRENCE	DATE

22. CONTRACTING OFFICER'S REPRESENTATIVE OR OTHER DULY DELEGATED AUTHORITY:
☐ DISAPPROVAL (RECOMMENDED)
☑ APPROVAL (RECOMMENDED)(WITH) (WITHOUT) PRICE ADJUSTMENT $ _____
SIGNATURE — DATE 5/21/93

23. CONTRACTING OFFICER:
☐ APPROVED
☐ DISAPPROVED
☐ SUBJECT TO CONDITIONS STATED ON MSFC FORM _____
SIGNATURE — DATE

MSFC - Form 847 (Rev May 1969)

ORIGINAL

DEVIATION APPROVAL REQUEST

1. FOR: ☒ DEVIATION ☐ SUMMARY OF MINOR NONCONFORMANCES

2. FROM CONTRACTOR:	3. CONTRACT NUMBER:	4. REQUEST NUMBER:
JPL - WF/PC-II	ST-ICD-03F SSM/OTA/SI	019

5. NOMENCLATURE:	6. NUMBER:	7. REVISION:	8. DATE:
WF/PC-II Magnetic Requirements	ST-ICD-03 SSM/OTA/SI	F	03/31/93

9. NONCONFORMANCE:	10. MRB ACTION NO.:	11. SERIAL NUMBER(S):	12. LOT NUMBER:	13. QUANTITY:
☒ MINOR ☐ MAJOR	N/A	N/A	N/A	N/A

14. SUPPLIER OR SUBCONTRACTOR (GIVE NAME AND ADDRESS):
JET PROPULSION LABORATORY, 4800 Oak Grove Drive, Pasadena, CA. 91109

15. SPECIFIED REQUIREMENTS:
ST-ICD-03F
Para. 3.6.2.2 - SSM and SI Magnetic Field Intensity

16. DESCRIPTION OF DEPARTURE FROM REQUIREMENTS:
"A" latch metal plate measured 6 gauss at a distance of 2 cm.

"B" latch bolt #3 measured 2.5 gauss at a distance of 1 cm.

"C" latch bolts #1 and #2 measured 2.8 gauss and 2.4 gauss, respectively at a distance of 1 cm.

17. REASON FOR REQUEST AND/OR CORRECTIVE ACTION TAKEN:
All items identified as being non-compliant, with the ICD requirements, are GFE (Government Furnished Equipment).

18. REMARKS:

19. CONTRACTOR CERTIFICATION: THE CONTRACTOR HEREBY CERTIFIES THAT THE ABOVE DESCRIBED DEVIATION IS A DEPARTURE FROM THE CONTRACTUAL REQUIREMENTS IN THE QUANTITIES AND/OR CONDITIONS AS STATED ABOVE.

☐ _____ COST ADJUSTMENT (EXPLAIN)
☒ NO COST ADJUSTMENT

Program Mgr (TITLE) — Larry L. Simmons (SIGNATURE OF AUTHORIZED REPRESENTATIVE) — 3/31/93 (DATE)

20. GOVERNMENT QUALITY ASSURANCE REPRESENTATIVE COMMENTS:

TITLE — SIGNATURE — DATE

21. MSFC REVIEW:

ORGANIZATION SYMBOL	REPRESENTATIVE	CONCURRENCE	NON-CONCURRENCE	DATE

22. CONTRACTING OFFICER'S REPRESENTATIVE OR OTHER DULY DELEGATED AUTHORITY:

☐ DISAPPROVAL (RECOMMENDED)
☑ APPROVAL (RECOMMENDED) (WITH) (WITHOUT) PRICE ADJUSTMENT. $ _____

John H. Campbell (SIGNATURE) — 5/21/93 (DATE)

23. CONTRACTING OFFICER:

☐ APPROVED
☐ DISAPPROVED
☐ SUBJECT TO CONDITIONS STATED ON MSFC FORM _____

SIGNATURE — DATE

MSFC - Form 847 (Rev May 1968)

ORIGINAL
(New Page Created by IRN 72)

DEVIATION APPROVAL REQUEST

SHEET 1 OF 1

FOR: ☒ DEVIATION ☐ SUMMARY OF MINOR NONCONFORMANCES

1. FROM CONTRACTOR:	3. CONTRACT NUMBER:	4. REQUEST NUMBER:
JPL - WF/PC-II	ST-ICD-03F SSM/OTA/SI	~~017~~ 020

5. NOMENCLATURE:	6. NUMBER:	7. REVISION:	8. DATE:
WF/PC-II EMC Requirements	ST-ICD-03 SSM/OTA/SI	F	03/31/93

9. NONCONFORMANCE:	10. MRB ACTION NO.:	11. SERIAL NUMBER(S):	12. LOT NUMBER:	13. QUANTITY:
☒ MINOR ☐ MAJOR	N/A	N/A	N/A	N/A

14. SUPPLIER OR SUBCONTRACTOR (GIVE NAME AND ADDRESS):
JET PROPULSION LABORATORY, 4800 Oak Grove Drive, Pasadena, CA. 91109

15. SPECIFIED REQUIREMENTS:
ST-ICD-03F
Para. 3.7.8.8 - Radiated Electric Field Emissions

16. DESCRIPTION OF DEPARTURE FROM REQUIREMENTS:
NB radiated emissions exceed the ICD limits by as much as 33 dB over the frequency range from 20 kHz to 50 MHz.

BB radiated emissions exceed the ICD limits by as much as 19 dB over the frequency range from 20 kHz to 500 kHz.

17. REASON FOR REQUEST AND/OR CORRECTIVE ACTION TAKEN:
Corrective action would require major disassembly of the instrument to modify cable harnesses, components, and/or to add additional cable shielding and EMI filters. Any such actions would require significant resources.

REMARKS:

19. CONTRACTOR CERTIFICATION: THE CONTRACTOR HEREBY CERTIFIES THAT THE ABOVE DESCRIBED DEVIATION IS A DEPARTURE FROM THE CONTRACTUAL REQUIREMENTS IN THE QUANTITIES AND/OR CONDITIONS AS STATED ABOVE.

☐ _____ COST ADJUSTMENT (EXPLAIN)
☒ NO COST ADJUSTMENT

Program Mgr (TITLE) Larry L. Simmons (SIGNATURE OF AUTHORIZED REPRESENTATIVE) 3/31/93 (DATE)

20. GOVERNMENT QUALITY ASSURANCE REPRESENTATIVE COMMENTS:

TITLE SIGNATURE DATE

21. MSFC REVIEW:

ORGANIZATION SYMBOL	REPRESENTATIVE	CONCURRENCE	NON-CONCURRENCE	DATE

22. CONTRACTING OFFICER'S REPRESENTATIVE OR OTHER DULY DELEGATED AUTHORITY:

☐ DISAPPROVAL (RECOMMENDED)
☑ APPROVAL (RECOMMENDED)(WITH) (WITHOUT) PRICE ADJUSTMENT. $ _____

John H. Campbell (SIGNATURE) 5/21/93 (DATE)

23. CONTRACTING OFFICER:

☐ APPROVED
☐ DISAPPROVED
☐ SUBJECT TO CONDITIONS STATED ON MSFC FORM _____

SIGNATURE DATE

MSFC - Form 847 (Rev May 1968)

ORIGINAL

HST CCR 3677 — DEVIATION APPROVAL REQUEST — SHEET 1 OF 4

FOR: [X] DEVIATION [ ] SUMMARY OF MINOR NONCONFORMANCES

2. FROM CONTRACTOR:	3. CONTRACT NUMBER:	4. REQUEST NUMBER:
JPL WF/PC-II	NAS 7-100	DAR-021

5. NOMENCLATURE:	6. NUMBER:	7. REVISION:	8. DATE:
WF/PC-II Static envelope	ST-ICD-03	F	4/20/93

9. NONCONFORMANCE:	10. MRB ACTION NO.:	11. SERIAL NUMBER(S):	12. LOT NUMBER:	13. QUANTITY:
[X] MINOR [ ] MAJOR	N/A	N/A	N/A	N/A

14. SUPPLIER OR SUBCONTRACTOR (GIVE NAME AND ADDRESS):
Jet Propulsion Laboratory, 4800 Oak Grove Drive, Pasadena, CA 91109

15. SPECIFIED REQUIREMENTS:
ST-ICD-03F: Figure 3.3-1A, Sht 1, Radial ORI Static Envelope.

NOTE: This figure is currently being added to ICD-03F as part of CCR 3510 (PIRN 3196R1), approved on 2/12/93 and awaiting release.

16. DESCRIPTION OF DEPARTURE FROM REQUIREMENTS:
AFM electronics cabling extends beyond the WF/PC-II Static envelope.

A rectangular volume 1.5" X 1.8" x 16"
(V1 X V2 X V3)
encompasses the 2 connectors and associated cabling. See sheets 2 and 3, attached.

17. REASON FOR REQUEST AND/OR CORRECTIVE ACTION TAKEN: Intrusion beyond current envelope is minor. Closest potential interference is OTA guiderail. Measurements of the assembled flight hardware demonstrate an approximately 3/4" clearance. Attached, flight hardware photo provides confirmation.

REMARKS:
No impact on SIFE guiderail, i.e., same clearance.

19. CONTRACTOR CERTIFICATION: THE CONTRACTOR HEREBY CERTIFIES THAT THE ABOVE DESCRIBED DEVIATION IS A DEPARTURE FROM THE CONTRACTUAL REQUIREMENTS IN THE QUANTITIES AND/OR CONDITIONS AS STATED ABOVE.

[ ] _____ COST ADJUSTMENT (EXPLAIN)
[XX] NO COST ADJUSTMENT

WF/PC-II Prog Mgr — TITLE
[signature] — SIGNATURE OF AUTHORIZED REPRESENTATIVE
4/29/93 — DATE

20. GOVERNMENT QUALITY ASSURANCE REPRESENTATIVE COMMENTS:

TITLE — SIGNATURE — DATE

21. MSFC REVIEW:

ORGANIZATION SYMBOL	REPRESENTATIVE	CONCURRENCE	NON-CONCURRENCE	DATE

22. CONTRACTING OFFICER'S REPRESENTATIVE OR OTHER DULY DELEGATED AUTHORITY:
[ ] DISAPPROVAL (RECOMMENDED)
[✓] APPROVAL (RECOMMENDED) (WITH) (WITHOUT) PRICE ADJUSTMENT $ _____
[signature] — SIGNATURE
5/21/93 — DATE

23. CONTRACTING OFFICER:
[ ] APPROVED
[ ] DISAPPROVED
[ ] SUBJECT TO CONDITIONS STATED ON MSFC FORM _____-1.

SIGNATURE — DATE

MSFC - Form 847 (Rev May 1969)

ORIGINAL

(New Page Created by IRN 72)

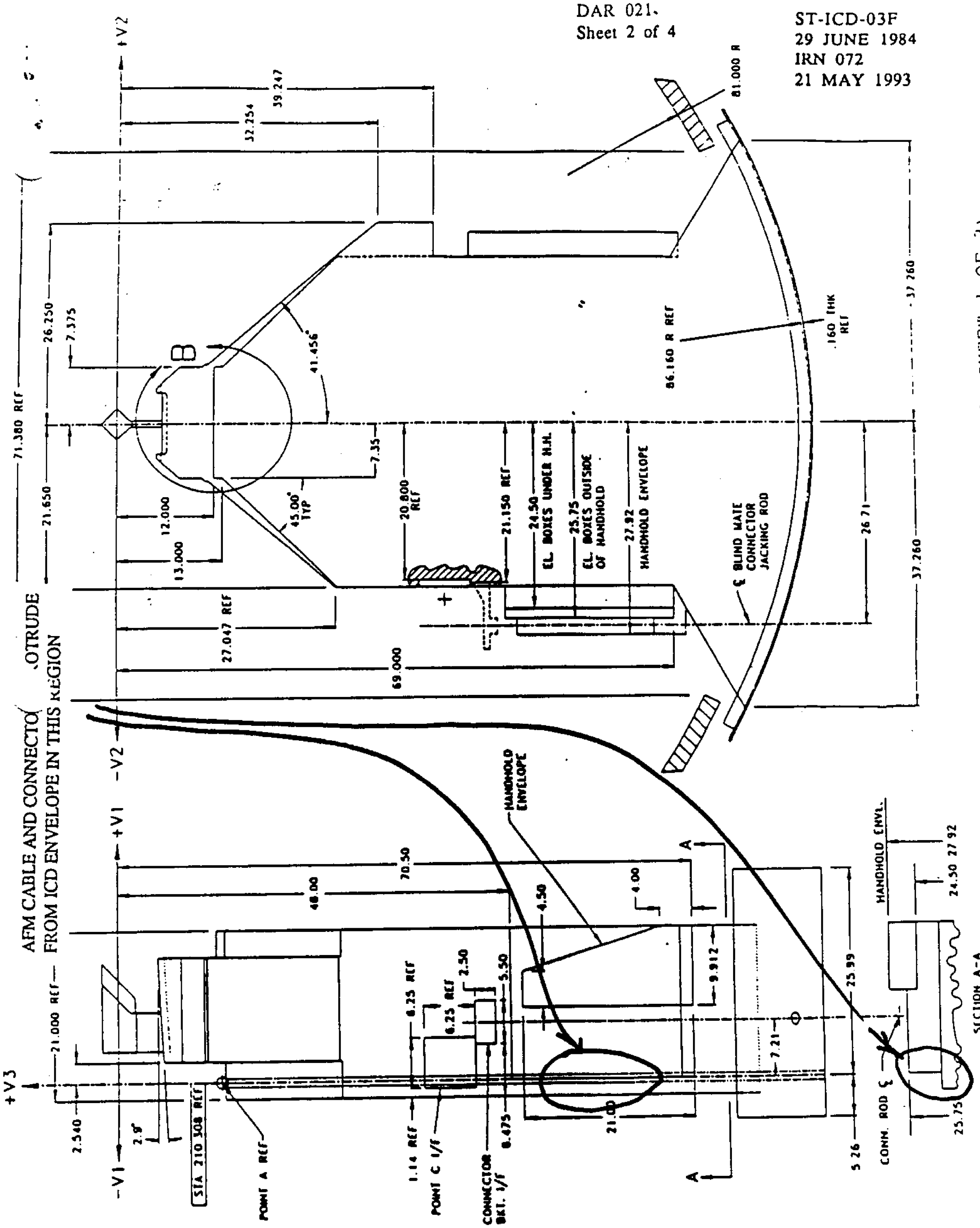

FIGURE 3.3-1A RADIAL ORI STATIC ENVELOPE (SHEET 1 OF 3)

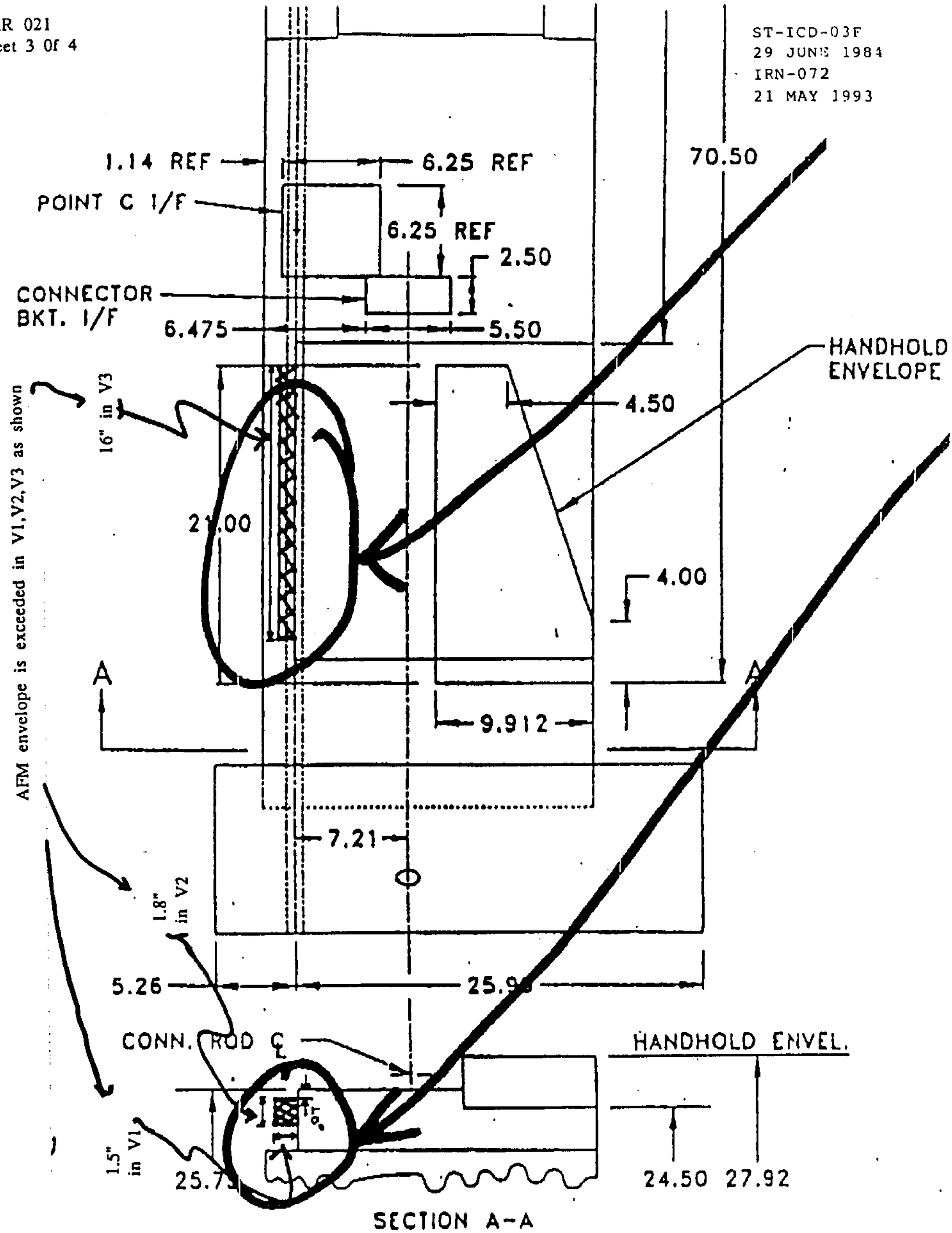

(New Page Created by IRN 72)

DAR 021
Sheet 4 of 4

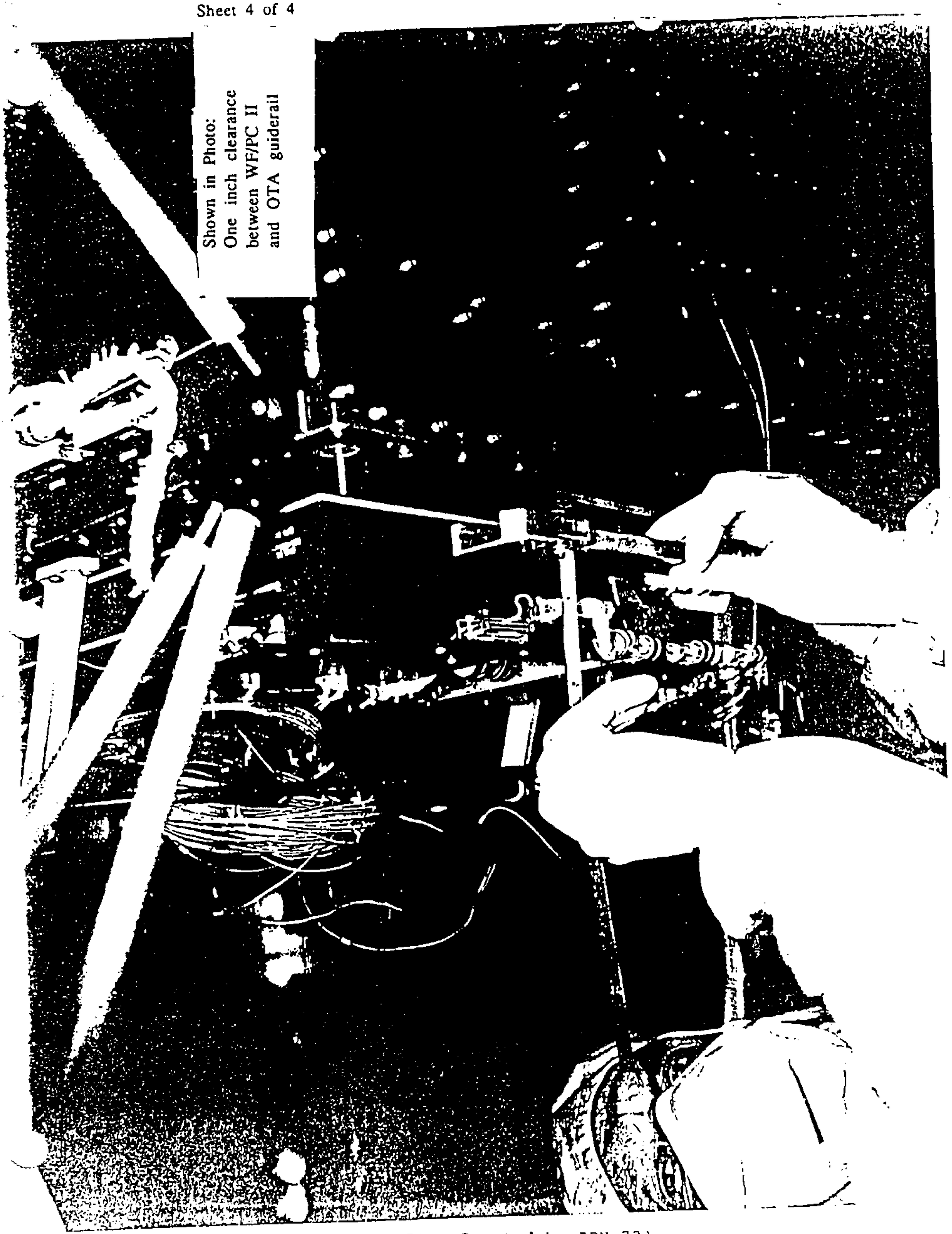

DEVIATION APPROVAL REQUEST

: [X] DEVIATION [ ] SUMMARY OF MINOR NONCONFORMANCES

M C TRACTOR:	3. CONTRACT NUMBER:	4. REQUEST NUMBER:
JPL WF/PC-II	NAS 7-100	DAR-23

ENCLATURE:	6. NUMBER:	7. REVISION:	8. DATE:
WF/PC-II peak power	ST-ICD-03F	F	09/08/93

CONFORMANCE:	10. MRB ACTION NO.:	11. SERIAL NUMBER(S):	12. LOT NUMBER:	13. QUANTITY:
INOR [X] MAJOR	N/A	N/A	N/A	N/A

PPLIER OR SUBCONTRACTOR (GIVE NAME AND ADDRESS):

Jet Propulsion Laboratory, 4800 Oak Grove Drive, Pasadena, CA 91109

ECIFIED REQUIREMENTS:	16. DESCRIPTION OF DEPARTURE FROM REQUIREMENTS:
-ICD-03F, paragraph 3.7 ak power= 262 watts for 2 minutes	Peak power = 267.7 watts for 12 seconds

ASON FOR REQUEST AND/OR CORRECTIVE ACTION TAKEN:

/PC-II thermal vacuum testing indicates the peak power exceeds the spec for 12 seconds. corrective action taken.

MA Although the spec is exceeded, it is for a minimal time (12 seconds) after which t ak power is within spec at 258 watts. Attached Design File Memo (DFM) #2088, Rev A, cuments the WF/PC-II power profile.

NTRACTOR CERTIFICATION: THE CONTRACTOR HEREBY CERTIFIES THAT THE ABOVE DESCRIBED DEVIATION IS A DEPARTURE FROM THE CONTRACTUAL REQUIREMENTS IN THE QUANTITIES AND/OR CONDITIONS AS STATED ABOVE.

COST ADJUSTMENT (EXPLAIN)

O COST ADJUSTMENT

Dep Project Manager — TITLE | [signature] — SIGNATURE OF AUTHORIZED REPRESENTATIVE | 8/10/93 — DATE

VE NMENT QUALITY ASSURANCE REPRESENTATIVE COMMENTS:

TITLE | SIGNATURE | DATE

FC REVIEW:

NIZATION SYMBOL	REPRESENTATIVE	CONCURRENCE	NON-CONCURRENCE	DATE
Associate Director	John W. Campbell	✓		10/15/93
ht Projects for				

NTRACTING OFFICER'S REPRESENTATIVE OR OTHER DULY LEGATED AUTHORITY:

DI PROVAL (RECOMMENDED)
A VAL (RECOMMENDED)(WITH) (WITHOUT) PRICE ADJUSTMENT. $ _____

23. CONTRACTING OFFICER:
[ ] APPROVED
[ ] DISAPPROVED
[ ] SUBJECT TO CONDITIONS STATED ON MSFC FORM _____

(New page created by IRN 74)

SIGNATURE | DATE | SIGNATURE | DATE

Form 847 (Rev May 1969)

JET PROPULSION LABORATORY

INTEROFFICE MEMORANDUM
DER-074-93 DFM 2088 Rev A
August 15, 1993

TO: L. Simmons

FROM: D. Rockey DR

SUBJECT: Revised WF/PC-II Orbital Power Draw Estimate

Power profile data was obtained during the WF/PC-II Thermal-Vac test and documented in DFM 2088 (attached). The power draws for RIU-A and RIU-B were inadvertently not added to this data when making estimates of the on-orbit instrument power draw (RIU-C power draw <u>was</u> included in these original measurements/estimates since that RIU is powered by the instrument bus).

Table 1 of this memo provides updated orbital power draw estimates which include ~4.5 W of power for RIU-A and RIU-B (one RIU is assumed active the other is in standby). The conclusions of the original DFM are modified due to these recalculations. The orbital average Hold and Operate Mode power draws increase marginally as indicated in the table but both remain within their indicated ICD limit (93 W and 189 W, respectively). Peak power draw which in the original DFM exceeded the 262 W limit in the Hot Orbit/32 V case by 1.1 W now exceeds the limit by 5.7 W. As previously described this limit is only briefly violated since the power draw decreases rapidly to the 258 W (recalculated value) within 12 seconds once the Cal Flip Mirror has started moving.

cc.

J. Beckert
T. Bickler
M. Devirian
J. Fanson
G. Fraschetti
R. Garcia
D. Gallagher
L. Herrell
B. Martin
R. Mattingly
T. Radey
A. Sen
K. Stowers
M. Thomas

(New page created by IRN 74)

WF/PC-II Orbital Condition	Orbital Average * Hold Mode + RepHtrs (W) [Limit 93 W]	Normal Operate** +AFMs NO RepHtrs (W)	Volts (V)	Repl Htr (W)	Duty Cycle (%)	Heat (W)	Orbital Average: Normal Operate** +AFMs + Repl Htrs (W) [Limit 189 W]	CAL S/S (W)	Orbital Average: Nor Oper+AFMs + RepHtrs + CAL (W) [Limit 189 W]	Peak*** Mechanism Actuation (W)	Peak Power **** Normal Oper + AFMs + RepHtrs (100%) + Actuations (W) [Limit 262 W]
Hot (+14 C)	72.0	122.9	32.0	48.1	0.25	12.0	134.9	30.4	165.3	96.7	267.7
Hot (+14 C)	65.4	120.1	28.0	36.8	0.33	12.0	132.1	30.4	162.5	96.7	253.6
Hot (+14 C)	60.1	107.7	24.0	27.1	0.44	12.0	119.7	30.4	150.1	96.7	231.5
Nominal (+12 C)	84.4	99.7	32.0	48.3	0.61	29.6	129.3	29.1	158.4	96.7	244.7
Nominal (+12 C)	79.5	99.1	28.0	37.0	0.80	29.6	128.7	29.1	157.8	95.0	231.1
Nominal (+12 C)	75.3	99.3	24.0	27.2	1.00	27.2	126.5	29.1	155.6	96.7	223.2
Cold (+10 C)	92.0	105.1	32.0	48.3	0.77	37.2	142.3	30.8	173.1	94.5	247.9
Cold (+10 C)	88.9	96.1	28.0	37.0	1.00	37.0	133.1	28.8	161.9	96.7	229.8
Cold (+10 C)	81.6	89.5	24.0	27.2	1.00	27.2	116.7	31.6	148.3	96.7	213.4

Shading Indicates Predicted Values

* Hold Mode includes RIU, LVPS, MECH

** Normal Operate includes RIU, LVPS, MECH, TEC

*** CAL Flip Mirror Power Draw Drops to ~84 W within several seconds

**** Peak Power of 262 W for 2 minutes is permitted as long as thermal constraints not exceeded, Power Constraints Reference ICD-03, CCR 3510

8/20/93

JET PROPULSION LABORATORY

INTEROFFICE
DER-93-062; DFM 2088
May 25, 1993

TO: L. Simmons

FROM: D. Rockey

SUBJECT: WF/PC-II Thermal-Vac Power Profiles

Reference: D. Allestad, WF/PC-II Power Estimate (Rev. B), DFM 1838, May 15, 1992

Power profile data was obtained during the WF/PC-II Thermal-Vac test for the following thermal/voltage conditions:

Hot orbit (32 V)	[File name: TVHOT.XLS]
Nominal orbit (28 V)	[File name: TVNOM.XLS]
Cold orbit (24, 28 & 32 V).	[File name: TVCOLD.XLS]

Power draws are summarized in the following EXCEL spread sheets (TVHOT.XLS, TVNOM.XLS, TVCOLD.XLS). These attachments also compare measured values to estimated power draws from the reference memo. Note that the Allestad memo was written prior to the doubling of the replacement heater power (ECR 19206). Measurement error bars of approximately ±2 W are inferred from repeated measurements of the same operating state.

For the unmeasured voltage cases, Ohm's Law was used to calculate heater power assuming constant resistance (unmeasured cases shaded in the attached Power Profile Summary chart). Knowing replacement heater power and duty cycle, the normal operate orbital average power was then calculated.[1] This normal operate orbital average power summed with the power draw of the on-board Calibration Subsystem (incandescent mode draw greater than UV) is then shown to be less than the ICD-03 (CCR 3510) orbital average limit of 189 W.

Peak power is calculated by summing the normal operate power, 100% duty cycle replacement heater power and maximum mechanism actuation power (Cal Flip Mirror; note: heat pipe heater draw is 92 W).[2] ICD-03 (CCR 3510) states, "Peak power of 262 Watts for 2 minutes per orbit is permitted as long as the thermal constraints of (Paragraph) 3.6.1 are not exceeded". Additionally, the EMI filter constrains the current to <10 Amps. The momentary peak power draw of the combined normal operate mode plus 100% replacement heaters plus Cal Flip Mirror actuation draws 263 W at 8.2 Amps. By the end of the 12 second Cal Flip Mirror actuation the power draw drops to 253 W at 7.9 Amps.

---

1 Hold Mode plus replacement heater power was calculated in the same way.

2 Mechanism actuation power draws:

Cal Flip Mirror	~97 W	(exponential drop to ~84 W within ~12 sec)
Shutter	~32 W	(110 msec/blade command)
SOFA	~28 W	(29 sec/command)
Pick-off Mirror Mechanism	~16 W	(0.08 sec/command)
Cal Lamps	~13 W	(70 sec/command max.)
K-Spot Lamps	~7 W	(70 sec/command max.)

After power-on, Cal Flip Mirror draw drops exponentially to ~10 W below its initial value.

Conclusions

Power profiles were obtained during the Thermal-Vac test for hot (32 V), nominal (28 V) and cold (24, 28, 32 V) orbit conditions (see attachments). Measurement error bars of approximately ±2W are inferred from repeated measurements of the same operating state. Orbital average power draws are calculated with and without operation of the on-board Cal Subsystem (see attached Power Profile Summary). The highest orbital average power draw is demonstrated to be less than the ICD-03 limit (CCR 3510) of 189 W. Peak power is calculated by summing the normal operate power draw with the 100% replacement heater power and the highest mechanism actuation power (Cal Flip Mirror draw 96.7 W). Peak power is 263 W for approximately 1 second decreasing to 253 W after 12 seconds. WF/PC-II meets all of the ICD power interface constraints (both orbital average and peak power) and the instrument current limit constraint.

cc.

J. Beckert
T. Bickler
M. Devirian
J. Fanson
G. Fraschetti
R. Garcia
D. Gallagher
L. Herrell
B. Martin
R. Mattingly
T. Radey
A. Sen
K. Stowers
M. Thomas

(New page created by IRN 74)

POWER PROFILE SUMMARY

WF/PC-II Orbital Condition	Orbital Average * Hold Mode + RepHtrs (W) [Limit 93 W]	Normal Operate** +AFMs NO RepHtrs (W)	Volts (V)	Repl Htr (W)	Duty Cycle (%)	Heat (W)	Orbital Average: Normal Operate** +AFMs + Repl Htrs (W) [Limit 189 W]	CAL S/S (W)	Orbital Average: Nor Oper+AFMs + RepHtrs + CAL (W) [Limit 189 W]	Peak*** Mechanism Actuation (W)	Peak Power **** Normal Oper + AFMs + RepHtrs (100%) + Actuations (W) [Limit 262 W]
Hot (+14 C)	67.4	118.3	32.0	48.1	0.25	12.0	130.3	30.4	160.7	96.7	263.1
Hot (+14 C)	61.4	116.1	28.0	36.8	0.33	12.0	128.1	30.4	158.5	96.7	249.6
Hot (+14 C)	55.9	103.5	24.0	27.1	0.44	12.0	115.5	30.4	145.9	96.7	227.3
Nominal (+12 C)	79.8	95.1	32.0	48.3	0.61	29.6	124.7	29.1	153.8	96.7	240.1
Nominal (+12 C)	75.5	95.1	28.0	37.0	0.80	29.6	124.7	29.1	153.8	95.0	227.1
Nominal (+12 C)	71.1	95.1	24.0	27.2	1.00	27.2	122.3	29.1	151.4	96.7	219.0
Cold (+10 C)	87.4	100.5	32.0	48.3	0.77	37.2	137.7	30.8	168.5	94.5	243.3
Cold (+10 C)	84.9	92.1	28.0	37.0	1.00	37.0	129.1	28.8	157.9	96.7	225.8
Cold (+10 C)	77.4	85.3	24.0	27.2	1.00	27.2	112.5	31.6	144.1	96.7	209.2

Shading Indicates Predicted Values

* Hold Mode includes RIU, LVPS, MECH

** Normal Operate includes RIU, LVPS, MECH, TEC

*** CAL Flip Mirror Power Draw Drops to ~84 W within several seconds

**** Peak Power of 262 W for 2 minutes is permitted as long as thermal constraints not exceeded, Power Constraints Reference ICD-03, CCR 3510

5/19/93

	WF/PC-II T/V Hot Orbit Power Profile (4/24/93) Prepared 5/19/93	Current (Amps)	Voltage (V)	Power (W)	Delta (W)	Item	Est Avg Power (W)	Est Peak Power (W)
1	Instrument Config: LVPS ON, MECH ON, AFM Elect ON							
	HP Htrs OFF, CAL S/S OFF, Repl Htrs OFF, TECs ON							
2	Verify 32 V	3.71	31.3	116.1				
3	Log Current/Voltage	5.18	31.3	162.1	46.0	Replacement Heaters		44.8
4	Replacement Heaters ON (Bays 1-4)	4.68	31.3	146.5				
5	CAL S/S to Incandescent, Cal ON	3.71	31.3	116.1	30.4	CAL S/S Incandescent	36.5	36.5
	Cal OFF	3.26	31.3	102.0				
7	MECH OFF	1.75	31.3	54.8				
	TEC OFF	4.71	31.3	147.4				
8	HP HTR ON	1.77	31.3	55.4	92.0	Heat Pipe Heaters	97.2	97.2
9	HP HTR OFF	3.23	31.3	101.1	46.3	TEC	49.1	51.5
10	TEC ON	3.76	31.3	117.7	15.7	MECH	11.0	11
11	MECH ON	3.77	31.3	118.0				
12	Verify AFM Voltage Set to Zero	3.59	31.3	112.4				
	AFM Power OFF	3.78	31.3	118.3	5.9	AFM Electronics	8.0	8.4
13	AFM Electronics ON	3.78	31.3	118.3				
	Verify AFM Voltages	3.78	31.3	118.3				
	Instrument Config: LVPS ON, MECH ON, AFM Elect ON							
	HP Htrs OFF, CAL S/S OFF, Repl Htrs OFF, TECs ON							
14	Set Instrument Voltage to 24 V	4.26	24.3	103.5				
15	Set Instrument Voltage to 28 V	4.13	28.1	116.1				
16	Set Instrument Voltage to 32 V	3.67	31.3	114.9				

	WF/PC-II T/V Nominal Orbit Power Profile (5/4/93) Prepared 5/19/93	Current	Voltage	Power	Delta	Item	Est Avg Power	Est Peak Power
	Instrument Config: LVPS ON, MECH ON, AFM Elect ON	(Amps)	(V)	(W)	(W)		(W)	(W)
	HP Htrs OFF, CAL S/S OFF, Repl Htrs ON, TECs ON							
2	Verify 28.01 V (Redundant Buss, Redundant AFM Buss)							
4	Log Current/Voltage	4.73	28.01	132.5				
	RIU-C	0.068	28.86	2.0		RIU-C		
4	Replacement Heaters OFF (Bays 1-4)	3.41	28.01	95.5	37.0	Replacement Heaters		35.6
8	CAL Flip Mirror Deploy (start draw)	6.80	28.01	190.5	95.0	Cal Flip Mirror Deploy		119.6
	CAL Flip Mirror Deploy (end draw)	6.50	28.01	182.1	86.6	Cal Flip Mirror Deploy		119.6
10	Replacement Heaters ON (Bays 1-4)	4.70	28.01	131.6				
12	CAL S/S to Incandescent Cal ON	5.74	28.01	160.8				
14	Cal OFF	4.70	28.01	131.6	29.1	CAL S/S Incandescent	36.5	36.5
16	Replacement Heaters OFF	3.38	28.01	94.7	37.0	Replacement Heaters		35.6
18	AFM Power OFF	3.18	28.01	89.1	5.6	AFM Electronics	8.0	8.4
20	TEC OFF	2.09	28.01	58.5	30.5	TEC		
22	MECH OFF	1.64	28.01	45.9	12.6	MECH		
24	HP HTR ON	4.26	28.01	119.3	73.4	Heat Pipe Heaters	54.7	54.7
26	HP HTR OFF	1.60	28.01	44.8				
28	LVPS OFF (Bay 5 Heater Only)	1.74	28.01	48.7	48.7	Bay 5 Heater	48.5	48.5
29	Verify Instrument on Prime Buss	1.75	28.01	49.0				

	WF/PC-II T/V Cold Orbit Power Profile (5/13/93) Prepared 5/19/93	Current	Voltage	Power	Delta	Item	Est Avg Power	Est Peak Power
	Instrument Config: LVPS ON, MECH ON, AFM Elect ON	(Amps)	(V)	(W)	(W)		(W)	(W)
	HP Htrs OFF, CAL S/S ON, Repl Htrs ON, TECs ON							
2	Verify 24.302 V							
	Log Current/Voltage	4.66	24.302	113.2				
6	Replacement Heaters OFF (Bays 1-4)	3.51	24.302	85.3	27.9	Replacement Heaters		35.6
8	CAL Flip Mirror Deploy (start draw)	7.4	24.302	179.8	94.5	Cal Flip Mirror Deploy		119.6
	CAL Flip Mirror Deploy (end draw)	6.98	24.302	169.6	84.3	Cal Flip Mirror Deploy		119.6
10	Replacement Heaters ON (Bays 1-4)	4.66	24.302	113.2				
12	CAL S/S to Incandescent Cal ON	5.96	24.302	144.8				
14	Cal OFF	4.66	24.302	113.2	31.6	CAL S/S Incandescent	36.5	36.5
16	Replacement Heaters OFF	3.52	24.302	85.5	27.7	Replacement Heaters		35.6
18	AFM Power OFF	3.28	24.302	79.7	5.8	AFM Electronics	8.0	8.4
20	TEC OFF	2.36	24.302	57.4	22.4	TEC	20.5	21.6
22	MECH OFF	1.88	24.302	45.7	11.7	MECH	6.5	6.5
24	HP HTR ON	4.16	24.302	101.1	55.4	Heat Pipe Heaters	54.7	54.7
26	HP HTR OFF	1.88	24.302	45.7				
34	Log Current/Voltage	1.71	28.002	47.9				
36	MECH ON	2.16	28.002	60.5	12.6	MECH	8.6	8.6
38	TEC ON	3.01	28.002	84.3	23.8	TEC	20.5	21.6
46	AFM ON	3.29	28.002	92.1	7.8	AFM Electronics	8.0	8.4
48	Replacement Heaters ON	4.61	28.002	129.1	37.0	Replacement Heaters		34.3
50	CAL S/S to Incandescent Cal ON	5.64	28.002	157.9	28.8	CAL S/S Incandescent	36.5	36.5
52	Cal OFF	4.61	28.002	129.1				
54	Log Current/Voltage	4.66	31.802	148.2				
56	CAL S/S to Incandescent Cal ON	5.63	31.802	179.0	30.8	CAL S/S Incandescent	36.5	36.5
58	Cal OFF	4.67	31.802	148.5				
60	Replacement Heaters OFF	3.16	31.802	100.5	48.0	Replacement Heaters		44.8
62	CAL Flip Mirror Stow (start draw)	6.2	31.802	197.2	96.7	Cal Flip Mirror Stow		119.6
	CAL Flip Mirror Stow (end draw)	5.6	31.802	178.1	77.6	Cal Flip Mirror Stow		119.6
64	AFM Power OFF	2.99	31.802	95.1	83.0			
66	TEC OFF	2.01	31.802	63.9	31.2	TEC	20.5	21.6
68	MECH OFF	1.58	31.802	50.2	13.7	MECH	11.0	11.0
70	HP HTR ON	4.57	31.802	145.3	95.1	Heat Pipe Heaters	97.2	97.2
72	HP HTR OFF	1.58	31.802	50.2				
74	MECH ON	1.95	31.802	62.0	11.8	MECH	11.0	11.0
76	TEC ON	2.82	31.802	89.7	27.7	TEC	20.5	21.6
82	AFM ON	3.07	31.802	97.6	8.0	AFM Electronics	8.0	8.4
84	Replacement Heaters ON	4.57	31.802	145.3	47.7	Replacement Heaters		44.8
86	Log Current/Voltage	4.64	24.2	112.3				

Waiver WFC3-W-002
Page 1 of 1

REQUEST FOR DEVIATION/WAIVER (RFD/RFW)

1. DATE (YYMMDD): 021127

Form Approved OMB No. 0704-0188

Public reporting burden for this collection of information is estimated to average 2 hours per response, including the time for reviewing instructions, searching existing data sources, gathering and maintaining the data needed, and completing and reviewing the collection of information. Send comments regarding this burden estimate or any other aspect of this collection of information, including suggestions for reducing this burden, to Department of Defense, Washington Headquarters Services, Directorate for Information Operations and Reports, 1215 Jefferson Davis Highway, Suite 1204, Arlington, Va 22202-4302, and to OMB, Paperwork Reduction Project (0704-0188), Wash., DC 20503.
PLEASE DO NOT RETURN YOUR COMPLETED FORM TO EITHER OF THESE ADDRESSES. RETURN COMPLETED FORM TO THE GOV'T ISSUING CONTRACTING OFFICER FOR THE CONTRACT PROCURING ACTIVITY NUMBER LISTED IN ITEM 2 OF THIS FORM

2. PROCURING ACTIVITY NUMBER

3. DODAAC

4. ORIGINATOR
a. TYPED NAME (*First, Middle Initial, Last*): Doug Fineberg/556/442
b. ADDRESS (*Street, City, State, Zip Code*): Godoard Space Flight Center, Greenbelt, MD. 20771

5. (*X one*) DEVIATION ___ WAIVER X
6. (*X one*) MINOR ___ MAJOR X CRITICAL ___

7. DESIGNATION FOR DEVIATION/WAIVER
a. MODEL/TYPE
b. CAGE CODE: 25306
c. SYS. DESIG.: STE-66
d. DEV/WAIVER NO.: WFC3-W-002

8. BASELINE AFFECTED
___ FUNCTIONAL
X ALLOCATED
___ PRODUCT

9. OTHER SYS/CONFIG ITEMS AFFECTED
YES ___ NO X

10. TITLE OF DEVIATION/WAIVER: WFC3 Weight

11. CONTRACT NO. AND LINE ITEM: N/A

12. PROCURING CONTRACTING OFFICER
a. NAME (*First, Middle Initial, Last*)
b. CODE
c. PHONE NO.

13. CONFIGURATION ITEM NOMENCLATURE: Wide Field Camera 3 (WFC3)

14. CLASSIFICATION OF DEFECT
a. CD NO.: N/A
b. DEFECT NO.: N/A
c. DEFECT CLASSIFICATION: MINOR ___ MAJOR X CRITICAL

15. NAME OF LOWEST PART/ASSEMBLY AFFECTED: Wide Field Camera 3

16. PART NO. OR TYPE DESIGNATION: 2044441

17. EFFECTIVITY: Serial Number 001 and up

18. RECURRING DEVIATION/WAIVER: YES ___ NO X

19. EFFECT ON COST/PRICE: None if approved

20. EFFECT ON DELIVERY SCHEDULE: None if approved

21. EFFECT ON INTEGRATED LOGISTICS SUPPORT, INTERFACE OR SOFTWARE
Interface with SIPE and Carrier (ORUC or SLIC) was evaluated. Direction is that SIPE and Carriers will support the increased mass. Approval of this waiver may require WFC3 to be removed from HST prior to HST de-orbit.

22. DESCRIPTION OF DEVIATION/WAIVER
The maximum weight of the WFC3 instrument, including GFE, will be 1000 lbs. The center of gravity will be held within the following range: V3= -55.9 ± 1 inches, V2= +0.5 ± 1 inches, V1= +218.7 ± 1 inches.

23. NEED FOR DEVIATION/WAIVER
Paragraph 3.5.3.2 (Weight of WFPC-II and Follow On ORIs) of ST-ICD-03F requires a maximum weight of 626 lbs, including GFE. Paragraph 3.5.3.3 (Center of Gravity) of ST-ICD-03F requires a CG of WFPC-II and Follow On ORIs to be V3= -49.3 ±1 inches, V2= -0.5 ±1 inch, V1= -218.6 ±1 inches.

24. CORRECTIVE ACTION TAKEN: None required.

25. SUBMITTING ACTIVITY
a. TYPED NAME (*First, Middle Initial, Last*): Doug Fineberg/556/442
b. TITLE: WFC3 Systems Engineer
c. SIGNATURE

26. APPROVAL/DISAPPROVAL
a. RECOMMEND APPROVAL DISAPPROVAL
b. APPROVAL: APPROVED X DISAPPROVED
c. GOVERNMENT ACTIVITY: Deputy Program Manager for HST
d. TYPED NAME (*First, Middle Initial, Last*): Edward O. Ruitberg
e. SIGNATURE: Edward O. Ruitberg
f. DATE SIGNED (YYMMDD): 030124
g. APPROVAL: APPROVED DISAPPROVED
h. GOVERNMENT ACTIVITY
i. TYPED NAME (*First, Middle Initial, Last*)
j. SIGNATURE
k. DATE SIGNED (YYMMDD)

DD Form 1694, APR 92

REQUEST FOR DEVIATION/WAIVER (RFD/RFW)

1. DATE (YYMMDD): 03/06/18

Form Approved OMB No. 0704-0188

Public reporting burden for this collection of information is estimated to average 2 hours per response, including the time for reviewing instructions, searching existing data sources, gathering and maintaining the data needed, and completing and reviewing the collection of information. Send comments regarding this burden estimate or any other aspect of this collection of information, including suggestions for reducing this burden to Washington Headquarters Services, Directorate for Information Operations and Reports, 1215 Jefferson Davis Highway, Suite 1204, Arlington, VA 22202-4302, and to the Office of Management and Budget, Paperwork Reduction Project (0704-0188), Washington DC 20503.

PLEASE DO NOT RETURN YOUR COMPLETED FORM TO EITHER OF THESE ADDRESSES. RETURN COMPLETED FORM TO THE GOVERNMENT ISSUING CONTRACTING OFFICER FOR THE CONTRACT/PROCURING ACTIVITY NUMBER LISTED IN ITEM 2 OF THIS FORM.

2. PROCURING ACTIVITY NUMBER:

3. DODAAC:

4. ORIGINATOR
a. TYPED NAME (First, Middle Initial, Last): Doug Fineberg
b. ADDRESS (Street no., City, State, Zip Code): Goddard Space Flight Center/Code 442, Greenbelt, Md. 20771

5. (X one): [ ] DEVIATION [X] WAIVER

6. (X one): [ ] MINOR [X] MAJOR [ ] CRITICAL

7. DESIGNATION FOR DEVIATION /WAIVER

a. MODEL/TYPE	b. CAGE CODE	c. SYS. DESIG.	d. DEV/WAIVER NO.
Wide Field Camera 3	25306	STE-66	WFC3-W-004

8. BASELINE AFFECTED: [ ] FUNCTIONAL [X] ALLOCATED [ ] PRODUCT

9. OTHER SYSTEM/CONFIGURATION ITEMS AFFECTED: HST

10. TITLE OF DEVIATION/WAIVER
Wide Field Camera 3 Thermal Coating Waiver

11. CONTRACT NUMBER AND LINE ITEM
N/A

12. PROCURING CONTRACTING OFFICER
a. NAME (First, Middle Initial, Last)
b. CODE
c. TELEPHONE NO

13. CONFIGURATION ITEM NOMENCLATURE
Wide Field Camera 3

14. CLASSIFICATION OF DEFECT
a. CD NO.: N/A
b. DEFECT NO.: N/A
c. DEFECT CLASSIFICATION: [ ] MINOR [ ] MAJOR [ ] CRITICAL

15. NAME OF LOWEST PART/ASSEMBLY AFFECTED
Wide Field Camera 3 Enclosure

16. PART NO. OR TYPE DESIGNATION
N/A

17. EFFECTIVITY
SN 001

18. RECURRING DEVIATION/WAIVER: [ ] YES [X] NO

19. EFFECT ON COST/PRICE
None if approved

20. EFFECT ON DELIVERY SCHEDULE
None if approved

21. EFFECT ON INTEGRATED LOGISTICS SUPPORT, INTERFACE OR SOFTWARE
None

22. DESCRIPTION OF DEVIATION/WAIVER
Waive ST-ICD-03 Figure 3.6-1 (SI Surface Temperature and Thermal Interface Surface Properties Characteristics Located Within the Aft Shroud) Notes 1 and 2 to the extent shown in the following description: (Continued on Page 2)

23. NEED FOR DEVIATION/WAIVER
The external electronics boxes on the WFC3 preclude blanketing in some places due to tight clearances. Instead, there will be exposed surfaces with coatings to minimize heat transfer to the aft shroud. Since the electronics boxes are externally mounted, some of the surface temperatures will be higher than those of WF/PC 1 and 2. (Continued on Page 2)

24. CORRECTIVE ACTION TAKEN
None.

25. SUBMITTING ACTIVITY
a. TYPED NAME (First, Middle Initial, Last): Doug Fineberg
b. TITLE: WFC3 Systems Engineer
c. SIGNATURE: Doug Fineberg

26. APPROVAL/DISAPPROVAL
a. RECOMMEND: [X] APPROVAL [ ] DISAPPROVAL

b. APPROVAL: [X] APPROVED [ ] DISAPPROVED

c. GOVERNMENT ACTIVITY: Deputy Associate Director for HST

d. TYPED NAME (First, Middle Initial, Last): Edward O. Ruitberg
e. SIGNATURE: Edward O. Ruitberg
f. DATE SIGNED (YYMMDD): 030808

g. APPROVAL: [ ] APPROVED [ ] DISAPPROVED

h. GOVERNMENT ACTIVITY

i. TYPED NAME (First, Middle Initial, Last)
j. SIGNATURE
k. DATE SIGNED (YYMMDD)

DD Form 1694, NOV 96 *(Computer Generated)*

22. DESCRIPTION of DEVIATION/WAIVER (Continued)

1) Allow all WFC3 external surfaces beyond 32.3" from the POM in the -V3 direction to have the appropriate external properties to achieve the requirement outlined in Note 3 of Figure 3.6-1. (This item relates to Figure 3.6-1 Note 1)

2) Allow outer layers to have $\alpha \leq 0.8$ as noted in the following table. (This item relates to Figure 3.6-1 Note 1)

Coating and Use	Solar Absorptivity (α)
Chromate (Irridite) • Enclosure Aft Panel • MEBs, LVPS (partial) • Enclosure between MEBs and CEB/DEB • MEB2 Heat Pipe Cover	0.29 - 0.50
VDA on Kapton • Heat Pipe and Vent Tube thermal wrap	0.08

3) Allow the operating temperatures to range from -20°C to +35°C for external surface and internal radiator surfaces. (This item relates to Figure 3.6-1 Note 2)

23. NEED FOR DEVIATION/WAIVER (Continued)

The current requirement from Notes 1 and 2 are as follows:

1) All SI surfaces excluding radiators external surfaces have an $\alpha \geq 0.8$ an effective $\varepsilon^* \leq 0.01$ and a structural operating temperature range of -20°C to +20°C.

2) The surface temperature of each internal radiator during operation is -20°C minimum to +20°C maximum.

The requirement for effective emmissivity and structural temperatures is meant to minimize heat into the aft shroud. The requirement for heat into the aft shroud is already outlined in ST-ICD-03 Figure 3.6-1 Note 3. "Total power radiated internal to the aft shroud is limited to 45 watts maximum during hot orbits and 60 watts max during cold orbits." In addition the requested effective emmissivity of less than 0.01 was to insure blanketing, but the performance

23. NEED FOR DEVIATION/WAIVER (Continued)

value of 0.01 is very difficult to measure. The requested structural operating temperatures were meant for WFPC I and II. They did not have any external electronics boxes attached to their enclosures as WFC3 does. The reason for an alpha greater than 0.8 is to provide a dark surface that prevents stray light. A more advanced understanding of the stray light concerns shows that just the area from the POM to 32.3" beyond the POM in the -V3 direction needs to have a dark outer surface. The WFC3 external structure from the mechanism cover to 32.3" beyond the POM (in the -V3 direction) will have an external MLI blanket with an $\alpha \geq 0.8$ outer layer, to protect from stray light per the requirement.

A stray light study performed by the GSFC optics branch showed that stray light due to any WFC3 non-black surfaces 32.3" or greater beyond the POM in the -V3 direction introduced via the OTA will not pose a problem under normal observing conditions. For light originating from the observing field-of-view, the non-black surface will increase the stray light along a few extremely tortuous paths by a factor of 4 at most. The light transmitted along these paths is still many orders-of-magnitude too low, for detection by any of the HST Instruments or FGS units.

Considering a failure mode of a major light leak through the WFC3 radiator panel: Light leaks through the radiator panel could cause severe stray light problems for all the instruments and FGS units, however, the effect on this stray light path increasing by a factor of 2 to 10 because of the non-black surfaces is not significant. Stray light tests are planned to ensure that there are no light leaks.